A Toy Communication System Simulation Testbed Based on Narrowband IoT Specifications

Zhuoyuan Sui
School of Science and Engeneering
The Chinese University of Hong Kong, Shenzhen
ShenZhen, China
zhuoyuansui@link.cuhk.edu.cn

***Abstract*—With the proliferation of Internet of Things (IoT) devices, significant challenges have emerged in the design and optimization of narrowband wireless communication systems, particularly with regard to power efficiency, interference, and channel impairments. This project develops a simulation testbed for a toy communication system (TCS) based on IoT standards, aimed at addressing these challenges through the integration of fundamental communication techniques. The testbed encompasses key components such as channel encoder, adaptive modulator, wireless fading channel simulator and etc., while also implementing algorithms for the estimation and compensation of common issue like timing and frequency offsets in practical systems. The system's performance is analyzed by evaluating spectrum efficiency and bit error rate (BER) with respect to signal-to-noise ratio (SNR). The primary contribution of this work is the development of a flexible and scalable platform that facilitates the evaluation of the performance of signal processing algorithms under realistic channel conditions. This testbed provides insights into the impact of channel distortions on system performance and supports the optimization of communication protocols for low-power, reliable, and robust IoT-based networks. Through this framework, the project contributes to advancing the state of the art in signal processing for IoT communication systems.**

I. Introduction

Internet of Things (IoT) has become increasingly prevalent in recent years, with billions of connected devices deployed globally, including wearable health monitors, intelligent housing appliances, and industrial sensors, all of which contributes to automation and data-driven decision-making. Moreover, diversified IoT standards and protocols have been proposed and are versatile to guarantee reliable communication in multiple scenarios like Zigbee, Bluetooth, Wi-Fi and etc.

Specifically, NB-IoT devices are critical for narrowband communication systems due to their ability to provide low power consumption, extended coverage, and efficient spectrum utilization. These features make NB-IoT particularly important in scenarios requiring long-range connectivity with minimal energy consumption. For our design, these characteristics align well with the balance of reliability, efficiency and economic energy allocation [1].

In this project, we developed a toy communication testbed to realize a simple narrowband wireless communication system through simulation, where you will start from building channel coding, modulation, pulse shaping, channel simulator, match filter, synchronization, demodulation, and decoding. Some common issues raised from practice can also be built in, including timing offset and frequency offset, and estimation and compensation algorithms can be built to offset these channel impairments. The testbed can be used to demonstrate a NB-IoT communication system and evaluate the performance of signal processing algorithms for communications.

II. Methodology

In this section, we describe the four main approaches of the TCS simulation testbed: wireless channel modeling, transmitter design, receiver design, and channel estimation approaches, as well as the parameter specifications and analysis methods. As shown in 1, the testbed consists of these four main components, integrated into a modular framework.

The testbed is developed using Python, drawing on design principles from "PySDR" [2] to structure the system's components. Additionally, we used some open-source toolkit like "CommPy" [3] library from GitHub, to implement specific communication techniques.

A. Parameter configuration based on Zigbee

The Zigbee protocol is a low-power, low-data-rate wireless communication standard based on the IEEE 802.15.4 specification [4]- [5], designed for applications like IoT, smart home automation, and industrial control, which provide a feasible reference for our parameter configuration of our testbed. The Zigbee PHY layer defines two working frequency bands which center at 868/915MHz and 2.4GHz. For 868/915MHz band, the 868 MHz band provides a single channel with a bandwidth 0.6MHz and supports a data rate of 20 kbps, while the 902-928 MHz band offers 10 channels with a data rate of 40 kbps. Both bands use Binary Phase-Shift Keying (BPSK) modulation [4].

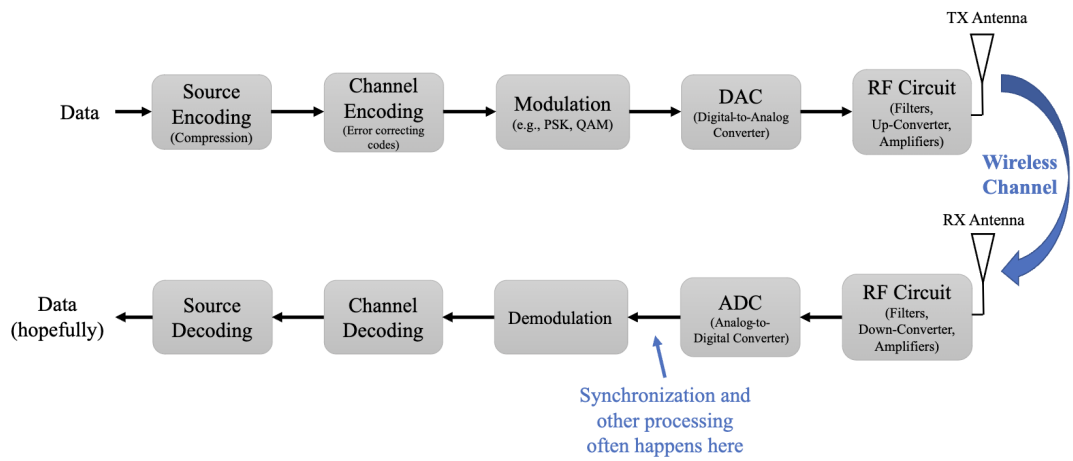

Fig. 1. System Block Diagram.

TABLE I
PARAMETER SPECIFICATIONS

Parameters	Symbol	Value		Unit
		QPSK	*16-QAM*	
Scheme index	/	0	1	/
Constellation size	M	2	4	/
Bit rate	R_b	20k	40k	bits/s
Symbol rate	R_s	10k	10k	symbols/s
Segment length	L	44		Bytes
Sampling frequency	f_s	1M		Hz
Carrier frequency	f_c	868.3M		Hz
Signal duration	T	L/R_b		seconds
Symbol period	T_s	$1/R_s$		seconds
Number of symbols	N_s	$T \cdot R_s$		/
Number of samples	N_{samples}	$T \cdot f_s$		/
Samples per symbol	sps	1000		/
Roll-off factor	β	0.35		/
Span of RRC filter	/	8		/

[a]Segment length stands for the length of a coding block

Receiver sensitivity reaches -92 dBm. Moreover, the maximum PHY service data unit (PSDU) size the PHY shall be able to receive is 127 bytes for default low-rate protocol according to IEEE 802.15.4 [5].

Our design follows the first scheme. We define the parameter as shown in I.

B. Wireless channel modeling

1) Multipath fading: The wireless channel modeling is based on following presumptions according to practical scenarios. First only small-scale statistic component (multipath fading) is considered, given usage scenarios of common toys are mostly small-scale spaces (tens of meters) like in family residences or outdoor activity areas. Second, the channel is a narrowband (flat-fading) channel where the signal bandwidth is much less than channel coherence bandwidth, therefore, no severe inter-symbol interference (ISI) issue. Third, the channel is a slow-fading channel where the symbol duration is much less than channel coherence time and each coding block share approximately the same channel gain. To verify this based on the current parameter, the maximum channel coherence time $T_{coherence}$ needs to satisfy [6]:

$$T_{coherence} = \frac{1}{2f_d} = \frac{c}{2vf_c} \geq T = \frac{L}{R_b} \tag{1}$$

where c is speed of light and f_d is doppler frequency. Assuming that the speed of our device is not greater than $v = 10m/s$, the segment length should satisfy:

$$L \leq \frac{R_b c}{2vf_c} \approx 345\text{bits} \tag{2}$$

For a baseband modulated message signal $u(t)$ and passband carrier frequency f_c , the received signal under narrowband multipath channel model is:

$$r(t) = \Re\left\{u(t)e^{j2\pi f_c t}\left(\sum_n \alpha_n(t)e^{-j\phi_n(t)}\right)\right\} \tag{3}$$

The time-varing channel response with two independent random processes of amplitude $\alpha_n(t)$ and phase $\phi_n(t)$ is:

$$h(t) = \sum_{n=0}^{N(t)} \alpha_n(t)e^{-j\phi_n(t)} \tag{4}$$

In our design, we adopted a Rician fading model with factor K to encompass both scenarios where a dominant line-of-sight (LOS) path is present or absent. The complex envelope of $c(t)$ follows a Rician distribution with a non-zero mean. Factor K represents the ratio of the LOS component to the NLOS components. When the LOS path does not exist, the channel envelope reduces to Ryleigh distribution and factor K equals to zero. For rician fading channel, with average channel gain $\mathbb{E}[|h|^2] = 1$ and normalized average symbol energy $E_s = 1$, instantaneous SNR γ observes Non-central chi-squared distribution with 2 degrees of freedom. The probability density function of which is (5). When $K = 0$, the formula is reduced to exponential distribution for Rayleigh fading:

$$f_\gamma(\gamma) = \frac{1}{\overline{\gamma}_s}e^{-\frac{\gamma}{\overline{\gamma}}}d\gamma \tag{6}$$

$$f_\gamma(\gamma) = \frac{K+1}{\bar{\gamma}} \exp\left(-K - \frac{(K+1)\gamma}{\bar{\gamma}}\right) I_0\left(2\sqrt{\frac{K(K+1)\gamma}{\bar{\gamma}}}\right), \quad \gamma \geq 0. \tag{5}$$

"CommPy" was used to establish a complex single-input-single-output (SISO) channel with Rician fading which can propagate the passband signal. The channel statistical characteristics can be configured according to different value of K. Additive white Gaussian noise (AWGN) can be added into channel corresponding to current value of SNR γ and coding rate. The average channel gain $|\bar{h}|$ is normalized to one unit.

Some modification was also made to the library. Specifically, since the channel model in "CommPy" calculates and assigns different channel gains for each symbol which likes a fast-fading case. To approximate the slow-fading channel model, we modified this approach by assigning the same channel gain across one entire coding block.

2) Timing and frequency offset: Timing offset and Frequency offset are common issue in practice. Timing offset represents misalignment between the transmitter and receiver timing references introduced by clock discrepancies or varying propagation delays. In our design, timing offset is generated by shifting the received signal in a number N samples. Delay can be expressed as

$$\Delta t = \frac{N}{f_s} \tag{7}$$

Frequency offset was introduced to simulate this Doppler shift, representing a relative movement between the transmitter and receiver. We generated a frequency offset by introducing a phase distortion. In receiver side, we can correct both timing and frequency offset with corresponding synchronization methods.

C. Transmitter design

1) Channel coding: Convolutional codes are widely used error-correcting codes designed to improve the reliability of communication systems. A convolutional code is characterized by its constraint length M, number of m generator polynomials and coding rate R_{cd}. The constraint length determines the memory depth of the encoder, which is $(M-1)$, while the generator polynomials define how input bits are mapped to output bits. The encoding process can be expressed mathematically as following [4]:

For a given input bitstream $\mathbf{u} = [u_0, u_1, \ldots, u_{k-1}]$ with length k and m generator polynomials $G_1, G_2, \ldots, G_m$, the output bitstream at the j-th time step can be expressed as $\mathbf{v}_j = [v_{j,1}, v_{j,2}, \ldots, v_{j,m}]$, where:

$$v_{j,l} = \bigoplus_{i=0}^{M-1} g_{l,i} \cdot u_{j-i} \mod 2, \text{ for } j \geq i \tag{8}$$

- $v_{j,l}$ is the encoded output of the j-th input bit through the l-th generator polynomial;
- $g_{l,i}$ is the i-th coefficient of the l-th generator polynomial;
- u_{j-i} is the delayed input bit of the input bitstream.

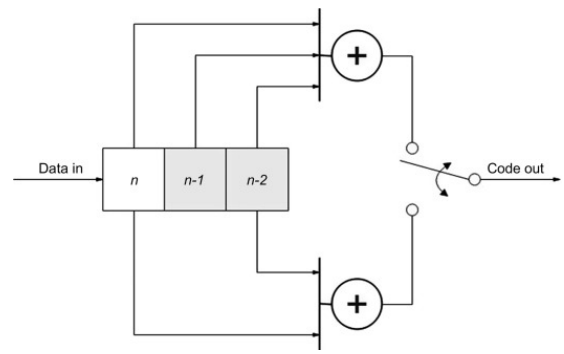

Fig. 2. Convolutional Encoder ($M = 3$, $m = 2$)

Therefore, the output bitstream of the encoder is the concatenation of the encoded results of all generator polynomials: $\mathbf{v} = [\mathbf{v}_0, \mathbf{v}_1, \ldots, \mathbf{v}_j, \ldots, \mathbf{v}_{k-1}]$, with length n, where the coding rate is computed as:

$$R = \frac{k}{n} = \frac{k}{k \cdot m} = \frac{1}{m} \tag{9}$$

In our design, the input bitstream is passed through a convolutional encoder defined by a Trellis structure. The encoder generates output bits based on the input and the current state of the shift registers. We chose a constraint length $M = 3$ and number of polynomial $m = 2$, the convolutional encoder achieves a code rate of $R = 0.5$.

Moreover, for the block transmission, termination bits (zeros) are appended to the input bitstream to guarantee the encoder returns to initial state at the end of the block. Hence, given the packet size of k bits and $k^{'}$ termination bits, actual coding rate is:

$$R_{actual} = \frac{k}{k + k^{'}} \cdot R \tag{10}$$

2) Modulation: Since our TCS are typically in small-scale spaces without high mobility or complex environments, channel state remain roughly constant over relatively long time periods. For AWGN channel, the maximum constellation size under a fixed power for a given bit error rate (BER) P_b and symbol SNR γ is given by:

$$M(\gamma) = 1 + \frac{1.5\gamma}{-\ln(5P_b)} \tag{11}$$

In our design, we implement two modulation scheme, QPSK and 16-QAM with corresponding constellation size of 4 and 16. Average energy per symbol E_s was normalized to one unit for consistent analysis. Scheme decision criteria is based on threshold SNR value γ_0, which will be determined by equation (**??**) with a specified BER level. Therefore, we can adaptively change the symbol rate according to current channel performance evaluated by received SNR value.

3) Pulse shaping: To ensure bandwidth efficiency and mitigate inter-symbol interference (ISI), we use Root Raised Cosine (RRC) filter as pulse shaping function at the transmitter [7]. In our design, the RRC filter is directly applied to the real and imaginary part of modulated symbol and return a pulse shaped signal. The pulse shaping function $g(t)$ with a roll-off factor β is:

$$g(t) = \begin{cases} \frac{1}{T_s}\left(1+\beta\left(\frac{4}{\pi}-1\right)\right), & t=0, \\ -\frac{\beta}{T_s\sqrt{2}}\left[\left(1+\frac{2}{\pi}\right)\sin\left(\frac{\pi}{4\beta}\right)+\right. & \\ \left.\left(1-\frac{2}{\pi}\right)\cos\left(\frac{\pi}{4\beta}\right)\right], & t=\pm\frac{T_s}{4\beta}, \\ \frac{\sin\left(\frac{\pi t}{T_s}(1-\beta)\right)+4\beta\frac{t}{T_s}\cos\left(\frac{\pi t}{T_s}(1+\beta)\right)}{\frac{\pi t}{T_s}\left[1-\left(4\beta\frac{t}{T_s}\right)^2\right]}, & \text{otherwise.} \end{cases} \tag{12}$$

4) Upconversion: Baseband signal is shifted to passband to transmit over the channel by upconverting to a carrier frequency. Given complex symbol a, its I-Q modulated signal by a carrier with frequency f_c is

$$s(t) = \Re(a)\cos(2\pi f_c t) - \Im(a)\sin(2\pi f_c t) \tag{13}$$

In our design, we implemented I-Q modulation on pulse shaped signals to transmit it to the wireless channel.

D. Receiver design

1) Down-conversion: Passband signal was received by antenna in end-device and down-converted to baseband by I-Q demodulation. Passband signal is first multiplied with a local oscillator with the same frequency as carrier f_c, then pass through a low pass filter with cut-off frequency f_c.

2) Matched filtering: The matched filter is designed to maximize the SNR for detecting known signals. Consider a system suffering both noise and ISI, the impulse response of ideal matched filter is given by a reverse of convolution between pulse shaping function $g(t)$ and channel impulse response $h(t)$ delayed by a symbol period T [7]:

$$q(t) = (g * h)^*(T-t) \tag{14}$$

Since wireless channels are time-varying and receiver cannot obtain channel state information (CSI) instantly by channel estimation, we use only pulse shaping function as a reference to design the matched filter.

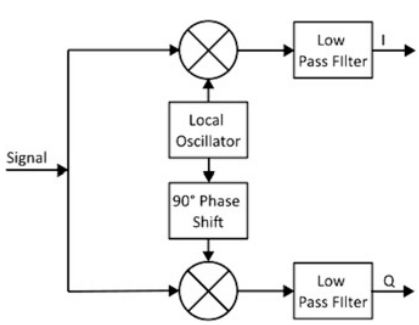

Fig. 3. Coherent I/Q demodulator.

3) Sychonization: To eliminate timing offset brought by channel, we implemented a Phase-Locked Loop (PLL) timing synchronization algorithm. *Mueller and Muller (M&M)* technique, proposed in 1976 [8], is a fast-converging timing recovery method, working as a decimator which chooses the most representative samples for the originals symbols. This technique can gradually update the phase according to timing error estimation at current samples and eventually iterate to the optimal sample. The Error estimation function and phase updating formula are:

$$z_i = \mathbf{g}_i^T \mathbf{x}_i \tag{15}$$

$$\mu_{i+1} = \mu_i - c \cdot z_i, \tag{16}$$

where $\mathbf{g}_k$ is a weighting vector, $\mathbf{x}_k$ represents the current sampled signal and c is the loop gain controlling the adjustment step size [8].

In our design, the algorithm initializes a phase estimate, μ, and iteratively refines it by selecting the optimal sample, $r[i]$, based on μ. Decision feedback is incorporated by quantizing the received sample, $d[i]$, to the nearest constellation point. The timing error is computed using the M&M error formula:

$$\begin{aligned} e_{\text{MM}} = \Re\Big[&(r[i]-r[i-2])\cdot d^*[i-1] \\ &-(d[i]-d[i-2])\cdot r^*[i-1]\Big], \end{aligned} \tag{17}$$

The phase is updated iteratively as:

$$\mu_{i+1} = \mu_i + \text{sps} + \alpha \cdot e_{\text{MM}}, \tag{18}$$

The sps is as samples per symbol and c as the timing error gain. The integer part of μ determines the next sampling index, while the fractional part is carried over for subsequent iterations.

The frequency synchronization method was implemented by Costas-Loop algorithm elaborated in PySDR [2]. Similar to timing synchronization, the loop operates as a feedback control system based on a Proportional-Integral controller. At each iteration, the received signal is phase compensated, and error is computed to calculate the deviation from the expected constellations. The frequency estimate is updated iteratively using the integral of the error, while the phase estimate is adjusted with both proportional and integral corrections. This dynamic adjustment ensures convergence to the correct phase and frequency.

4) Demodulation: In demodulation, transmitted symbols were extracted from the received signal by symbol down-mapping. Depending on the modulation scheme (e.g., QPSK or 16-QAM), the algorithm scales and separates the real and imaginary components of the synchronized signal. These components are mapped to constellation points defined by the modulation scheme, and hard decision demodulation is performed using predefined modulation objects. A prefix is extracted from the demodulated bitstream for synchronization

purposes, followed by the retrieval of the information bits. This flexible implementation allows for dynamic adaptation to different modulation formats while ensuring accurate recovery of transmitted data.

5) Decoding: The Viterbi algorithm, proposed by Viterbi in 1967 [9], is prevailed for its low complexity to decode convolutional code when using maximum likelihood criteria. We directly use python module "commpy" to implement this decoding algorithm and its details will not be elaborated in this paper.

E. Channel estimation and Feedback channel

To acquire the channel state information (CSI) and compensate the channel impairments, a channel estimation process was implemented based on introducing preambles as "pilot bits". In one transmitted segment, 4 bytes are allocated to a known preamble and the remaining 40 bytes is for message.

The method relies on a least-squares (LS) approach to estimate the channel gain based on the known transmitted preamble symbol sequences $x[n]$ and raw received symbol sequences before hard decision $y[n]$, which is:

$$h_{\text{est}} = \frac{\sum_{n=1}^{N} y[n] \cdot x^*[n]}{\sum_{n=1}^{N} |x[n]|^2} \tag{19}$$

In receiver side, during transmission of one segment, CSI is approximated by the preamble symbol sequences before demodulation. Then the estimated channel gain is applied to message symbol sequence to equalize the channel impairments.

Considering the system computation complexity and simulation period, our testbed does not encompass a feedback channel to inform CSI to transmitter (without CSIT, only CSIR).

F. Analyzing method

To evaluate the feasibility and performance of the testbed, Bit Error Rate (BER) and outage probability were used to assess channel reliability, reflecting the accuracy of data transmission and the likelihood of the SNR falling below a predefined threshold. Spectrum efficiency was analyzed to measure the effective data rate per unit bandwidth.

III. Result

A. Simulation environment and Parameter specifications

The study includes four distinct simulation scenarios: Rician fading with a K factor of 50 and Rayleigh fading, each evaluated under two modulation schemes, QPSK and 16-QAM. The parameter configurations for the different simulation environments are presented in II.

B. Reliability testing

We first evaluated the feasibility and performance of the testbed by analyzing the relationship between BER and average SNR. For QPSK and 16QAM modulation schemes, the target BER and the symbol SNR value, γ, are mathematically related through the Q-function as follows [4]:

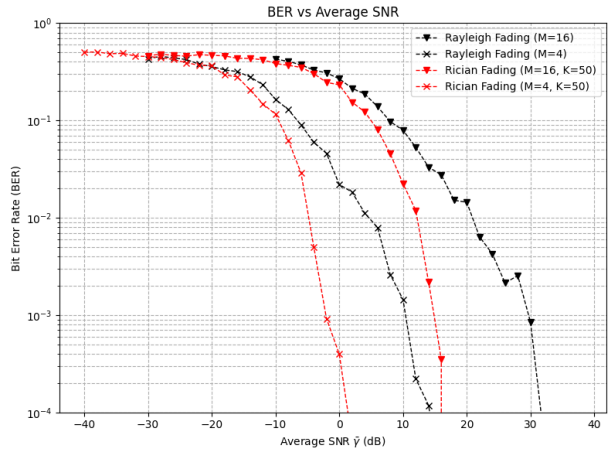

Fig. 4. BER versus Average SNR over different senarios

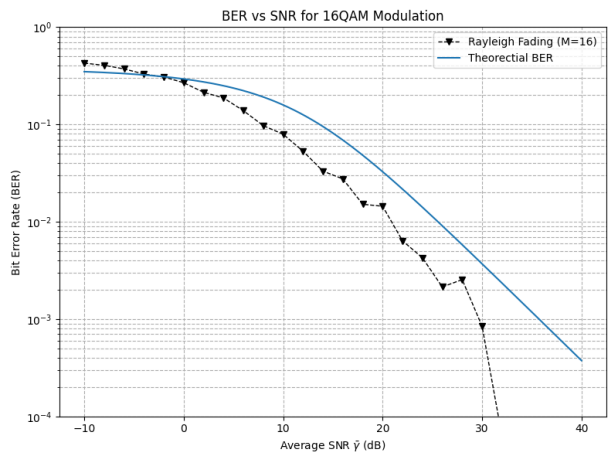

Fig. 5. BER comparison with theoretical result

$$\bar{P}_b \approx \frac{\alpha_M}{2\log_2(M)} \left[1 - \sqrt{\frac{0.5\beta_M \bar{\gamma}_s}{1 + 0.5\beta_M \bar{\gamma}_s}} \right] \tag{20}$$

where α_M and β_M is parameters with respect to modulation scheme.

A total of 500 segments, each with a size of 44 bytes (amounting to 21.48 MB), were transmitted from the transmitter to the receiver. The average BER as a function of average SNR was plotted over an SNR range of -40 dB to 40 dB, as illustrated in the 4.

We can compare our simulation result with curve in (20). We chose *Scenario 1*, which is Rayleigh fading with 16QAM as an instance as shown in 5.

With simulated BER curve, we can further calculate the outage probability versus SNR under a given SNR threshold determined by a target BER level [4]:

$$P_{\text{out}} = \int_0^{\gamma_0} f_\gamma(\gamma) d\gamma \tag{21}$$

TABLE II
SIMULATION PARAMETERS

Parameter	Scenario 1	Scenario 2	Scenario 3	Scenario 4
K	0		50	
M	16	4	16	4
SNR range	-10-40dB	-30-20dB	-30-20dB	-40-10dB
Segment size	44 KB			
Coding rate	0.455			
Bandwidth	6.75 kHz			
Number of segments	500			
Target BER	10^{-3}			

[a]SNR range stands for the simulation range in BER analysis
[b]Bandwidth is calculated by (1+α)/2, where α stands for the roll-off factor of RRC filter
[c]Target BER is use as a constant for ourtage probability analysis

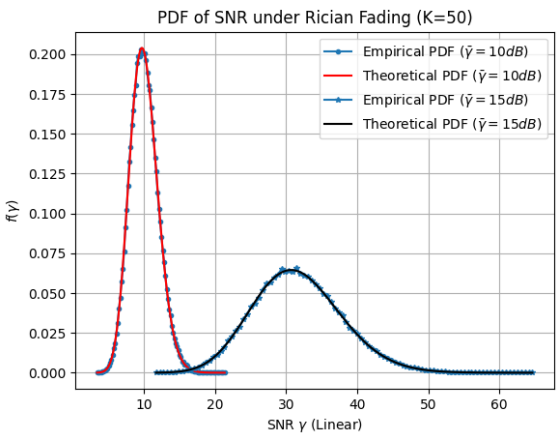

Fig. 6. Estimated Distribution of SNR under Rician Fading

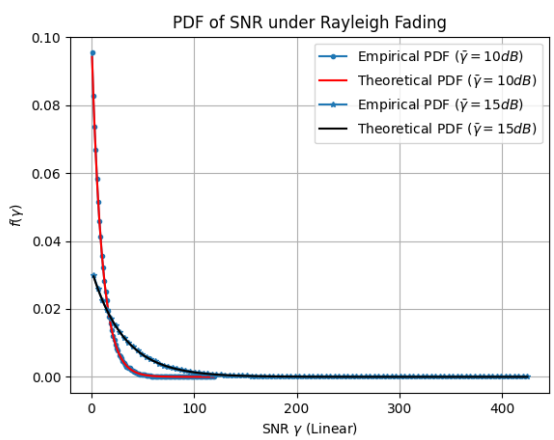

Fig. 7. Estimated Distribution of SNR under Rayleigh Fading

where $f_\gamma(\gamma)$ is the probability density function (PDF) of SNR of a Rician fading channel, which has the formula like (5). To verify the distribution of SNR in simulation, the estimated distribution of γ is visualized as below figures together with the theoretical curve:

Since a satisfactory agreement, we use the theoretical PDF

TABLE III
SNR THRESHOLD UNDER TARGET BER

Parameter	Scenario 1	Scenario 2	Scenario 3	Scenario 4
γ_0 (dB)	29.69	10.40	14.86	-2.06

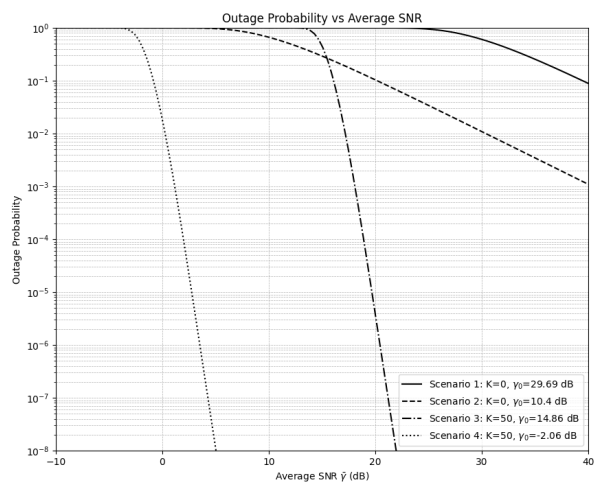

Fig. 8. Outage Probability versus SNR

model as a substitute to calculate outage probability in (21). We choose a target BER of $P_b = 10^{-3}$, which give the corresponding threshold SNR γ_0 as shown in III. Based on (21), the outage probability versus average SNR value is shown in refOPvsSNR.

C. Efficiency testing

For our testbed, we also evaluate it performance by analyzing spectrum efficiency to evaluate the efficiency. Under a specific BER P_b, the spectrum efficiency is calculated by [4]:

$$\mathrm{SE}(\gamma) = \frac{R}{B} = \int_0^\infty \log_2\left(1 + \frac{1.5\gamma}{-\ln(5P_b)}\right) f_\gamma(\gamma)\, d\gamma, \quad (22)$$

where $f_\gamma(\gamma)$ is PDF of SNR.

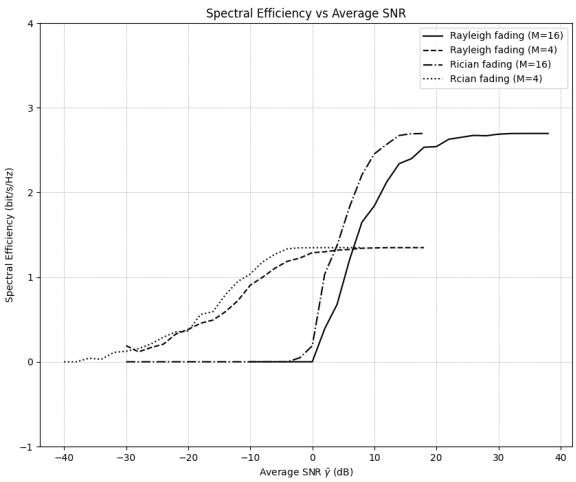

Fig. 9. Spectrum efficiency versus SNR

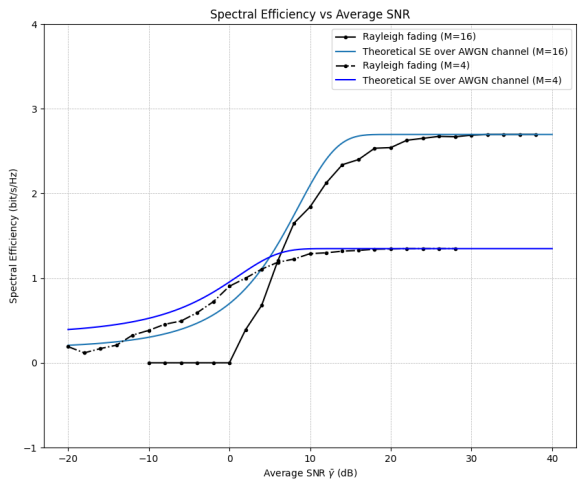

Fig. 10. Spectrum efficiency comparison with theoretical results.

From the previous part, we have acquire the BER value P_b under average SNR values. The relationship between symbol error rate (SER) P_s and BER can be approximated as [4]:

$$P_s \approx \log_2(M) \cdot P_b \tag{23}$$

The spectrum efficiency can be approximated as:

$$\text{SE} \approx \log_2(M)(1 - P_s) \cdot R_{coding} \cdot \frac{2}{1+\beta} \tag{24}$$

Based on (23) and (24), the spectrum efficiency of simulation results including four scenarios are shown in 9:

From and (20) and (23), we can obtain the theoretical spectrum efficiency. We chose *Scenario 1* and *Scenario 2*, which correspond to Rayleigh fading with 16-QAM and QPSK, respectively, to illustrate the similarities and discrepancies between the theoretical and simulated results, as shown in 10.

IV. Discussions

A. Interpretation of Results

The simulation results obtained from our self-built testbed provide a comprehensive evaluation of both reliability and efficiency metrics, demonstrating the feasibility and validity of our design.

The BER and outage probability under both Rician and Rayleigh fading channels comply with some expected theoretical characteristics. Specifically, the Rician fading channel, benefiting from a dominant line-of-sight component, exhibits lower BER and outage probability compared to the Rayleigh channel, where signal fluctuations are more severe due to the absence of such a component. While our results do not precisely match theoretical idealized values, they remain within acceptable deviations, reflecting the practical implementation nuances of the testbed. In terms of spectral efficiency, the results are also consistent with theoretical expectations. Under high SNR conditions, the system achieves notable spectral efficiency improvements in the Rician fading scenario, attributable to better signal stability and higher modulation and coding rates. In the Rayleigh fading scenario, while the spectral efficiency is naturally lower due to greater signal variability, the results still demonstrate a logical and expected relationship between SNR and efficiency.

Overall, the simulation results provide strong evidence of the system's capability to capture key channel characteristics and performance trade-offs. The alignment of both reliability and efficiency outcomes with theoretical trends confirms that the self-built testbed is robust and suitable for modelling a narrowband wireless communication systems in realistic fading conditions.

B. Limitations

As mentioned, feedback channel is not implemented in this testbed due to design complexity and computation cost for simulation, which means transmitter does not know CSI. The testbed can be further compatible with adaptive control if with a feedback channel.

Transmitter power is assumed to be fixed for this IoT-based TCS testbed design. We predefine a fixed average SNR value and transfer it to the channel model to configure the noise power correspondingly. While in practice, varying the transmit power is common approach to combat SNR fluctuation due to fading and maximize channel capacity. And power control policy is an essential requirement for reduce power consumption sustained activities.

C. Perspectives and Improvements

Future Directions can mainly focus on the implementation of power control policy and Adaptive modulation and coding (AMC) techniques based on a feedback channel. We can directly maximize the channel capacity by truncated channel inversion power Control, which truncated the channel at the worse case [4]:

$$\frac{P(\gamma)}{\overline{P}} = \begin{cases} \frac{\sigma}{\gamma}, & \gamma \geq \gamma_0 \\ 0, & \gamma < \gamma_0 \end{cases} \tag{25}$$

$$\sigma = \frac{1}{\mathbb{E}_{\gamma_0}\left[\frac{1}{\gamma}\right]} \tag{26}$$

where σ is constant receiver SNR and the threshold SNR value γ_0 is determined by a target BER.

AMC techniques have been successfully implemented in various wireless standards. IEEE 802.11a wireless LANs standard varies the constellation size from $M = \{2, 4, 16, 64\}$ and the coding rate can be chosen from 0.5 to 0.75 [10]. In the context of early 2G communications, Furuskar et al. (1999) and Nanda et al. (2000) demonstrated AMC in 2G systems, using SNR feedback to switch between GMSK for low-SINR and 8-PSK for high-SNR conditions. Nanda et al. extended this in EGPRS with nine Modulation and Coding Schemes for slot-level adaptation. Both incorporated incremental redundancy, retransmitting parity bits only after decoding failures, optimizing error correction and modulation switching [11]- [12].

Several advanced adaptive modulation and coding (AMC) schemes with power control can be established in the testbed with a feedback channel. Based on (11), we can directly derive the lower bound and divide the SNR into different fading regions to maximize the corresponding spectrum efficiency.

Wang et al. (2020) provide valuable insights for building an adaptive modulation simulation system tailored for IoT scenarios. By generating SNR-BLER curves for different modulation and coding schemes under AWGN and multi-path fading channels, their work demonstrates how to determine the SNR thresholds for each CQI and optimize modulation and coding decisions based on real-time channel conditions. The proposed CQI-SNR mapping through curve fitting simplifies traditional table-based methods, reducing computational complexity. Additionally, effective SNR mapping algorithms such as EESM and MIESM are employed to aggregate SNR values across subcarriers into a single effective SNR, which is crucial for IoT systems using multi-carrier communication. Their iterative optimization of adjustment factors, based on mean square error, enhances the accuracy of SNR mapping and ensures adaptive modulation aligns with real-world channel conditions [13]. These techniques allow IoT nodes with varying capabilities, such as low-power sensors and high-throughput gateways, to dynamically adapt their modulation and coding, enabling efficient and reliable communication in diverse and complex network environments, which offers a robust framework for implementing adaptive modulation strategies, making it a key reference for our system design.

V. Significance and Conclusion

This paper introduces a flexible and modular TCS testbed, designed to bridge the gap between theoretical communication models and practical implementations for narrowband IoT systems. By integrating essential components, the testbed enables realistic evaluation of system performance under Rician and Rayleigh fading conditions, while accounting for practical impairments like timing and frequency offsets.

The significance of this work lies in its modular system design, which integrates key components into a cohesive and scalable testbed. The implementation of compensation algorithms (e.g., M&M timing recovery and Costas loop frequency synchronization, LSE and etc.) effectively addresses practical impairments such as timing, frequency offsets and fading impairments, ensuring robust system performance. Additionally, the adoption of systematic result analysis methods, including BER and spectrum efficiency evaluation, provides a comprehensive assessment of system reliability, efficiency and their trade-offs across various SNR scenarios.

Future studies can focus on implementing feedback channels to enable CSIT, facilitating the compatibility for feedback-based channel optimization, such as AMC and power control policy. By incorporating practical considerations with theoretical analysis, this testbed can be further extended into a robust and scalable platform for exploring advanced signal processing techniques.

Acknowledgment

I would like to express my gratitude to Prof. CHEN, Junting for his guidance and support throughout this research. His advices have been instrumental in shaping the direction and quality of this work. Moreover, I would like to extend my thanks to Prof. CHEN, Junting and Prof. XU, Jie for imparting theoretical knowledge of digital signal processing and wireless communication system theory, which greatly enhanced my understanding and competence in this field.

References

[1] M. Chen, Y. Miao, Y. Hao, and K. Hwang, "Narrow Band Internet of Things," *IEEE Access*, vol. 5, pp. 20557–20577, Sep. 2017.

[2] M. Lichtman, "PySDR: A Guide to SDR and DSP using Python," *PySDR.org*, [Online]. Available: https://pysdr.org/content/intro.html. Accessed: Dec. 1, 2024.

[3] V. Taranalli, B. Trotobas, and contributors, "CommPy: Digital Communication with Python," [Online]. Available: https://github.com/veeresht/CommPy. [Accessed: Dec. 15, 2024].

[4] S. C. Ergen, "ZigBee/IEEE 802.15.4 summary," EECS Department, University of California, Berkeley, Tech. Rep., Sept. 2004.

[5] "IEEE Standard for Low-Rate Wireless Networks," *IEEE Std 802.15.4-2020 (Revision of IEEE Std 802.15.4-2015)*, IEEE, pp. 1–800, May 2020.

[6] A. Goldsmith, *Wireless Communications*. Cambridge, U.K.: Cambridge Univ. Press, 2005.

[7] S. Haykin, *Communication Systems*, 4th ed. New York, NY, USA: John Wiley & Sons, Inc., 2001.

[8] K. H. Mueller and M. Muller, "Timing recovery in digital synchronous data receivers," *IEEE Trans. Commun.*, vol. 24, no. 5, pp. 516–531, May 1976.

[9] G. D. Forney, Jr., "The Viterbi algorithm," *Proc. IEEE*, vol. 61, no. 3, Mar. 1973, pp. 268–278.

[10] B. P. Crow, I. Widjaja, J. G. Kim, and P. T. Sakai, "IEEE 802.11 wireless local area networks," *IEEE Commun. Mag.*, vol. 35, no. 9, pp. 116–126, Sept. 1997.

[11] A. Furuskar, S. Mazur, F. Muller, and H. Olofsson, "EDGE: Enhanced data rates for GSM and TDMA/136 evolution," *IEEE Pers. Commun.*, vol. 6, no. 3, pp. 56–64, June 1999.

[12] S. Nanda, K. Balachandran, and S. Kumar, "Adaptation techniques in wireless packet data services," *IEEE Commun. Mag.*, vol. 38, no. 1, pp. 54–64, Jan. 2000.

[13] Y. Wang, W. Liu, and L. Fang, "Adaptive Modulation and Coding Technology in 5G System," in *Proc. IEEE*, pp. 159–164, 2020.