SIMD and Weight-Output reconfigurable 2D Systolic Array-based AI accelerator

TSHIRT

Arnav Saxena, Chaitanya Kunda, Michael Aquilina, Revant Mahajan, Sujit Suresh, Shashank Venkatramani

Motivation

Systolic arrays are a foundational architecture for modern AI accelerators. In this project, we investigate how to enhance such an array through reconfigurability and increased parallelism, and we demonstrate the complete design on real hardware by implementing it on an FPGA with a custom host-FPGA control framework.

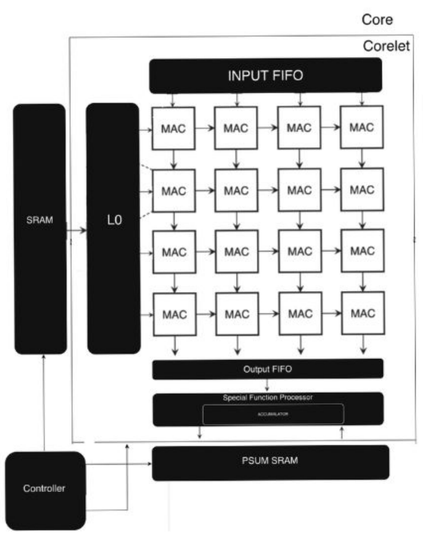

(Cyclone IV GX)

Frequency Max	118.13 MHz
Dynamic Power	20.60 mW
Total Ops Per Cycle	128
TOPS	0.01512
TOPS/W	0.31142
Number of Registers	12298
Number of Logic Elements	18142

VGG 16	4-bit	2-bit
Accuracy	92.00%	91.40%
Quant Error	1.751e-7	5.757e-2

Alpha 1: FPGA Hardware

- *Physically* implemented an 8×8 systolic MAC array accelerator with a dedicated control FSM targeting a convolution-like workload (9 kernels, 36 activations, 16 output feature maps), on a **Xilinx Artix-7 XEM7310**, and python controller for PC Host
- Implemented dual-port BRAMs as a unified activation/weight memory and storage for accumulation result.
- Added a ROM-based address generator to drive PMEM access patterns during accumulation.

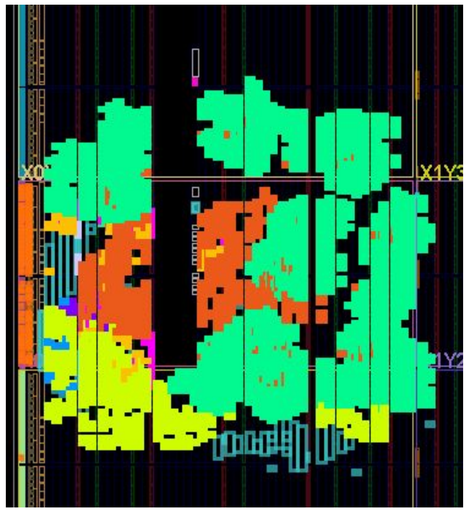

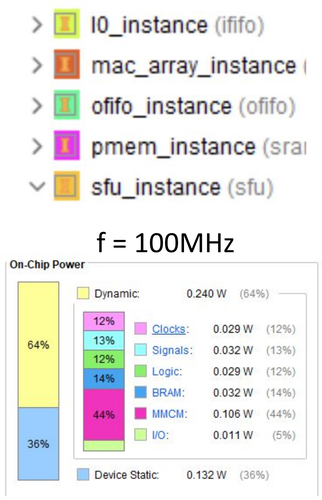

Resource	Utilization	Available	Utilization %
LUT	7150	134600	5.31
LUTRAM	32	56200	0.07
FF	13043	269200	4.85
BRAM	13	365	3.84
IO	41	284	14.39

Setup		Hold	
Worst Negative Slack (WNS):	0.042 ns	Worst Hold Slack (WHS):	0.060 ns

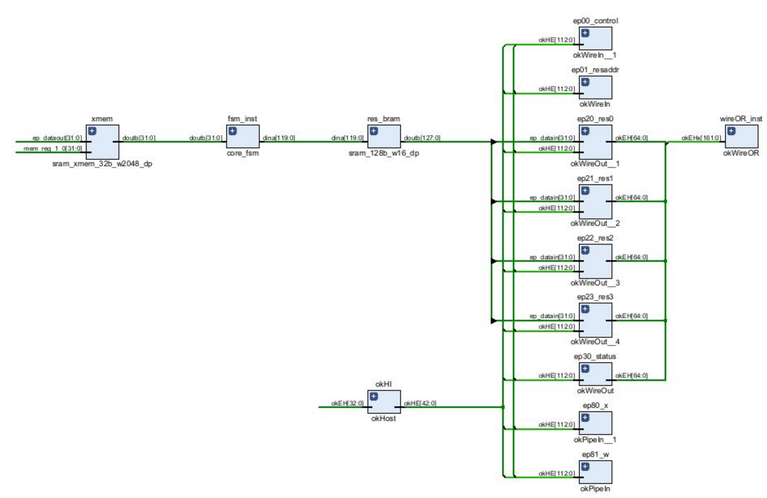

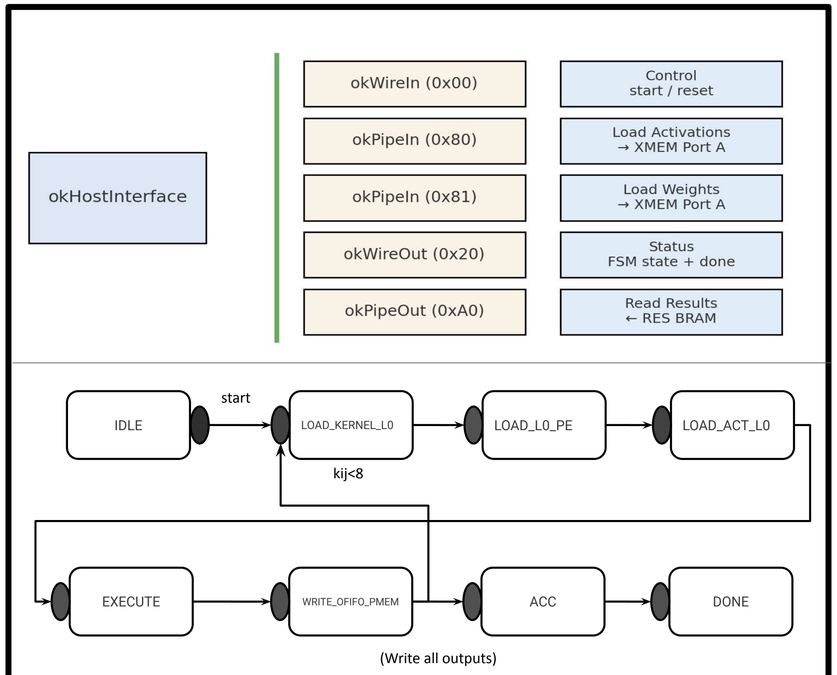

Alpha 2: Control Unit (FPGA FSM)

Core driven using a compact 35-bit control word (inst_q).
LOAD_KERNEL_L0: Loads each 3×3 kernel from XMEM into L0 FIFO, then broadcasts to the MAC array.
LOAD_ACT_L0/EXECUTE: Streams all activations from XMEM into L0 and then through the array.
WRITEBACK_OFIFO_PMEM: Writes intermediate results from OFIFO into PMEM for each kernel.
ACC: Performs accumulation across kernels using ROM-generated PMEM addresses and an SFU (including ReLU), then writes final outputs into output BRAM RES.
FSM exposes a done flag and a 4-bit debug_state to monitor internal progress

Alpha 3: Output Tiling

- Modified PEs to support 8 activations (4-bit) or 16 activations (2-bit) on the same systolic array by using two MAC units.
- Alternating weight loading scheme needed to latch.
- Through tiling and writing results sequentially to SRAM, the 8×8 systolic array can produce all 16 output channels.
- Uses single-write and dual-read SRAM to merge both halves into the full 16 channel output.