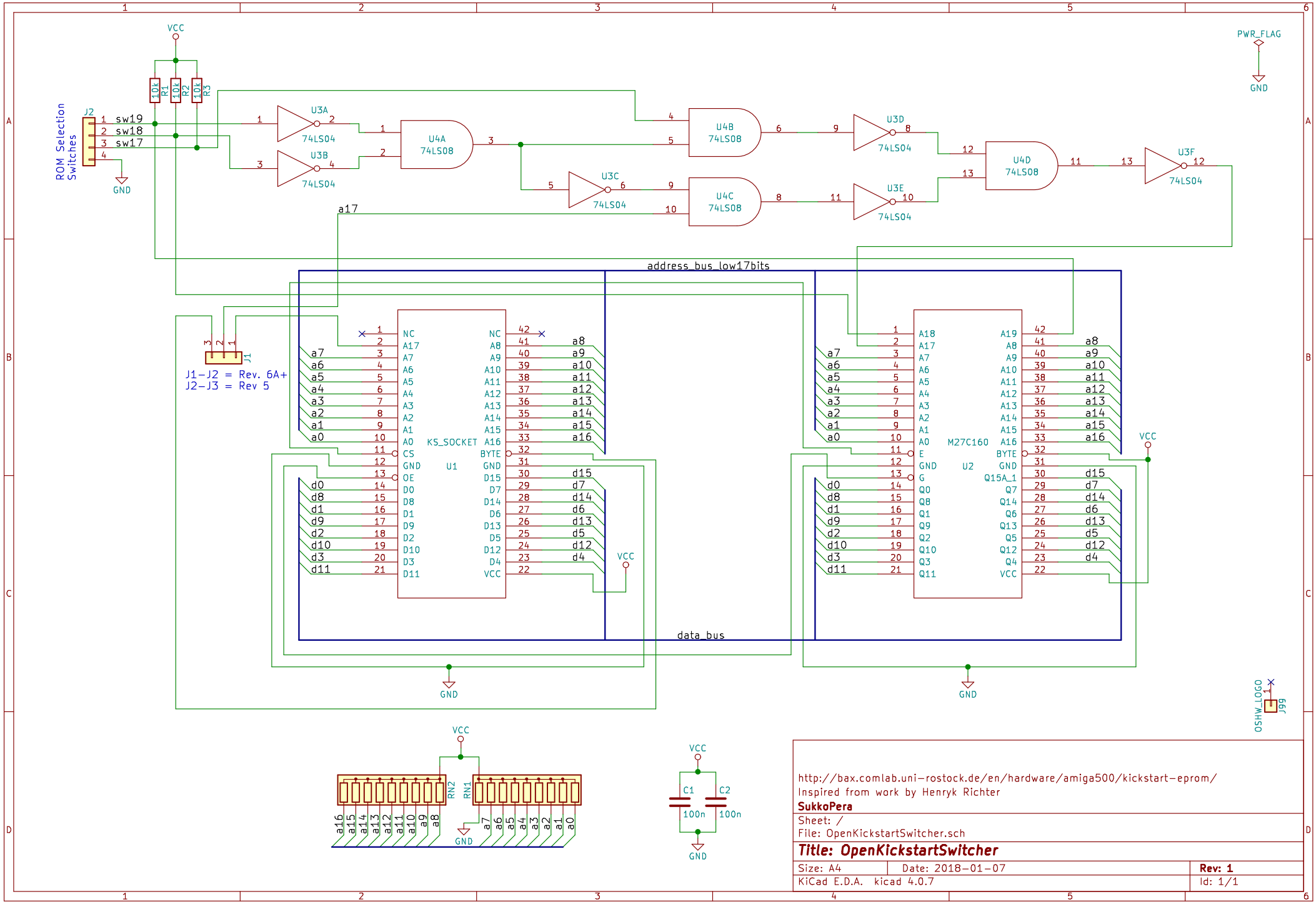

http://bax.comlab.uni-rostock.de/en/hardware/amiga500/kickstart-eprom/
Inspired from work by Henryk Richter
SukkoPera

Sheet: /
File: OpenKickstartSwitcher.sch

Title: OpenKickstartSwitcher

Size: A4	Date: 2018-01-07	**Rev: 1**
KiCad E.D.A. kicad 4.0.7		Id: 1/1