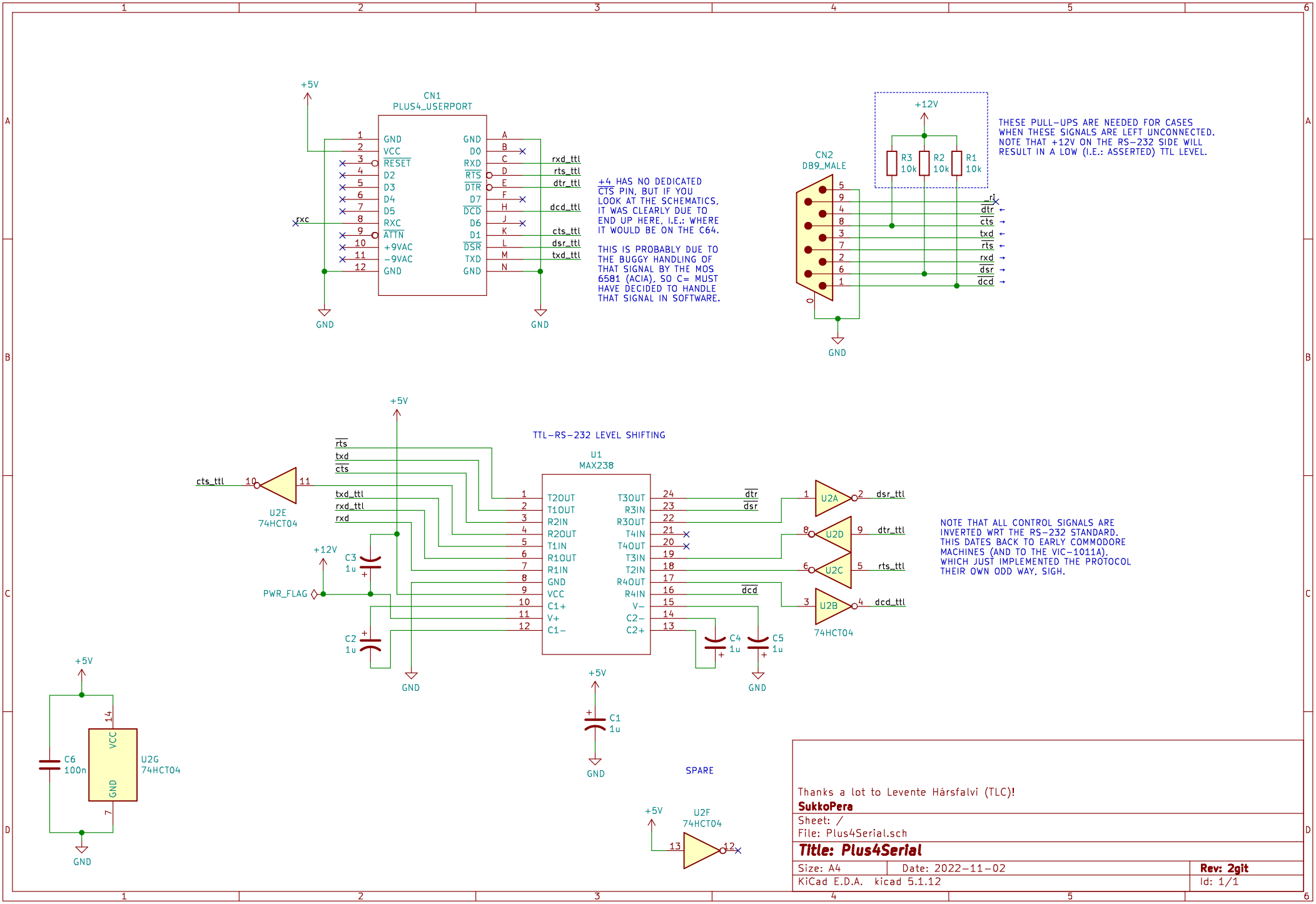
CN1
PLUS4_USERPORT
+5V
GND
D0
RXD
RTS
DTR
D7
DCD
D6
D1
DSR
TXD
RESET
D2
D3
D4
D5
RXC
ATTN
+9VAC
−9VAC
rxd_ttl
rts_ttl
dtr_ttl
dcd_ttl
cts_ttl
dsr_ttl
txd_ttl
+4 HAS NO DEDICATED CTS PIN, BUT IF YOU LOOK AT THE SCHEMATICS, IT WAS CLEARLY DUE TO END UP HERE, I.E.: WHERE IT WOULD BE ON THE C64.
THIS IS PROBABLY DUE TO THE BUGGY HANDLING OF THAT SIGNAL BY THE MOS 6581 (ACIA), SO C= MUST HAVE DECIDED TO HANDLE THAT SIGNAL IN SOFTWARE.
+12V
R3 10k
R2 10k
R1 10k
THESE PULL-UPS ARE NEEDED FOR CASES WHEN THESE SIGNALS ARE LEFT UNCONNECTED. NOTE THAT +12V ON THE RS-232 SIDE WILL RESULT IN A LOW (I.E.: ASSERTED) TTL LEVEL.
CN2
DB9_MALE
ri
dtr
cts
txd
rts
rxd
dsr
dcd
TTL-RS-232 LEVEL SHIFTING
U1
MAX238
T2OUT
T1OUT
R2IN
R2OUT
T1IN
R1OUT
R1IN
GND
VCC
C1+
V+
C1-
T3OUT
R3IN
R3OUT
T4IN
T4OUT
T3IN
T2IN
R4OUT
R4IN
V-
C2-
C2+
U2E
74HCT04
U2A
U2D
U2C
U2B
74HCT04
C1 1u
C2 1u
C3 1u
C4 1u
C5 1u
PWR_FLAG
NOTE THAT ALL CONTROL SIGNALS ARE INVERTED WRT THE RS-232 STANDARD. THIS DATES BACK TO EARLY COMMODORE MACHINES (AND TO THE VIC-1011A), WHICH JUST IMPLEMENTED THE PROTOCOL THEIR OWN ODD WAY, SIGH.
C6 100n
U2G
74HCT04
VCC
GND
SPARE
U2F
74HCT04
Thanks a lot to Levente Hársfalvi (TLC)!
SukkoPera
Sheet: /
File: Plus4Serial.sch
Title: Plus4Serial
Size: A4
Date: 2022-11-02
Rev: 2git
KiCad E.D.A. kicad 5.1.12
Id: 1/1