REON LED

REON INDUSTRIES PVT.LTD

50W ECO LENS STREET LIGHT

RNIPL-1102

INPUT CHARACTERISTICS

- INPUT VOLTAGE.....100-300VAC
- INPUT CURRENT.....220 MA
- INPUT POWER.....50 WATT
- POWER FACTOR.....>0.95
- FREQUENCY.....50-60Hz
- EFFICIENCY.....85 %
- THD.....<10%

PROTECTION CHARACTERISTICS

- SURGE PROTECTION.....6KV
- OVER VOLTAGE PROTECTION.....YES
- UNDER VOLTAGE PROTECTION.....YES
- INGRESS PROTECTION (IP).....IP65

LED AND PCB CHARACTERISTICS

- LED AVERAGE LIFE.....50,000 Hrs
- NOS. OF LED.....50 NOS.
- LED LUMENS.....140L/W
- LED CRI.....80K
- LED COLOUR TEMP.....3000K/6500K
- LED PACKAGE.....2835
- LUMENS EFFICIENCY.....100L/W
- PCB SIZE.....160*115 MM

ENVIRONMENT OPERATING DETAILS

- MAX. OPERATING TEMP.....10 TO 50 DEGREE
- LUMINARIES TYPE.....OUTDOOR

MECHANICAL DETAILS

- DIMENSIONS.....381*164*58 MM
- PIE DIA.....Ø47 MM
- FIXTURE MATERIAL.....ADC 12
- FIXTURE COATING.....POWDER COATING

KEY FEATURES

- HIGH VOLTAGE WITH STANDING CAPACITY – 440 VAC
- HIGH VOLTAGE CUTOFF AT 310 VAC
- AUTO RESTART AFTER SAFE VOLTAGE MODE
- COMPACT AND AESTHETIC DESIGN
- BETTER THERMAL MANAGEMENT
- OPTICAL LENS WITH SILICON
- GASKETS FOR INGRESS PROTECTION
- HIGH EFFICIENCY LONG LIFE LED

USAGE AND APPLICATION

- COMPLEX
- MANUFACTURING PLANT
- CAR PARKING
- RESORTS
- GARDEN AND PARK
- TOWNSHIP
- ROADWAY LIGHTING

WARRANTY – 2 YEARS

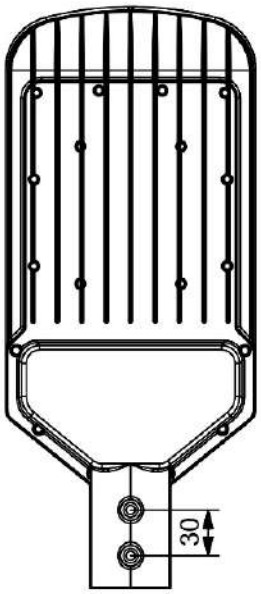

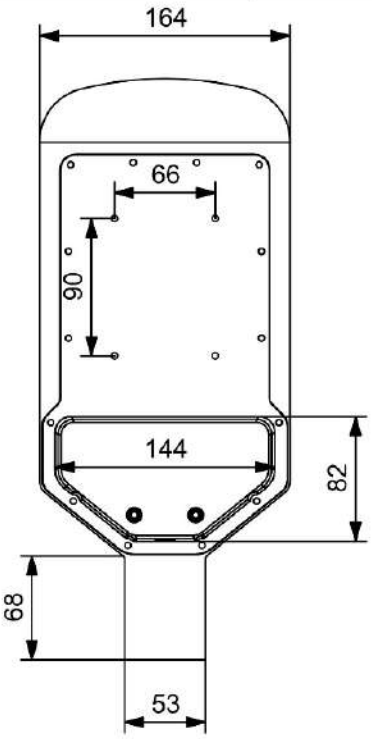

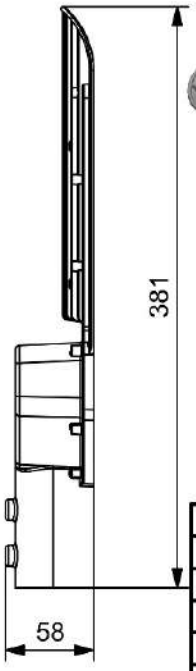

BODY WEIGHT	495 gm
PCB SIZE	160 x 115 mm
DRIVER AREA	144 x 82 x 44 mm
OVERALL DIM	381 x 164 x 58 mm
PIPE DIA	47 mm
GROSS WEIGHT	940 gm

* ALL DIMENSIONS IN MM

REON INDUSTRIES PVT.LTD		TITLE - 50W ECO LENS STREET LIGHT			
FIRST ISSUED		DRG NO. RNIPL-1102			
DRAWN BY					
CHECKED BY		DATE	SIZE	SCALE	SHEET
APPROVED BY		23-03-2023		N/A	SHEET 1 OF 1

A4

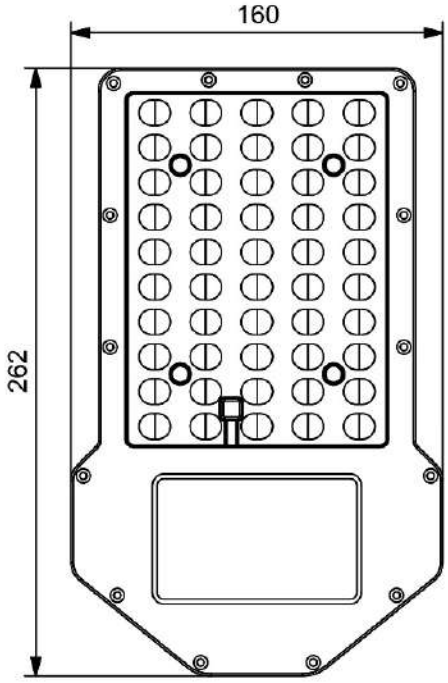

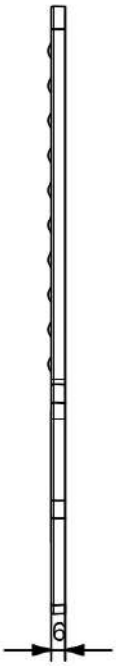

GENERAL INFORMATION -
1.LENS MATERIAL - OPTICAL PC
2.LENS WEIGHT - 115 gm

* ALL DIMENSIONS IN MM

REON INDUSTRIES PVT.LTD		TITLE - 50W ECO LENS STREET LIGHT			
FIRST ISSUED		DRG NO. RNIPL-1102			
DRAWN BY					
CHECKED BY		DATE	SIZE	SCALE	SHEET
APPROVED BY		23-03-2023		N/A	SHEET 1 OF 1

A4

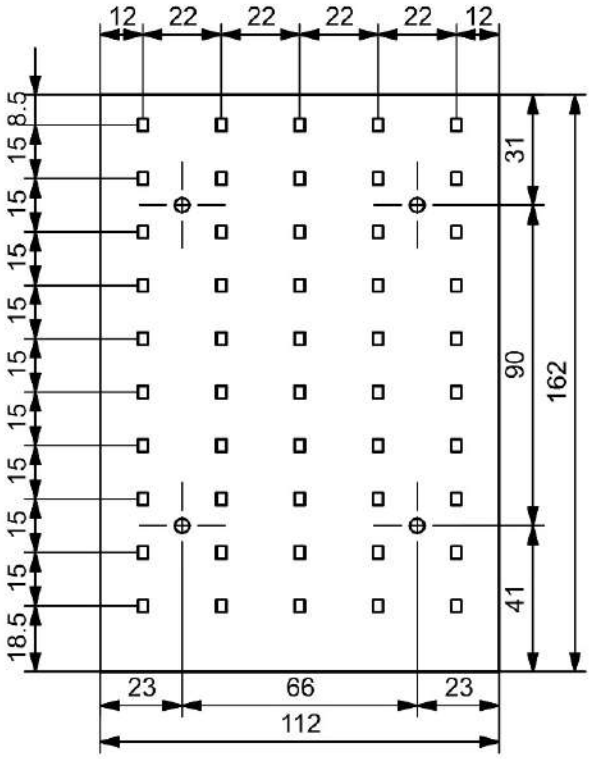

REON INDUSTRIES PVT.LTD		TITLE - 50W ECO LENS STREET LIGHT			
FIRST ISSUED		DRG NO. RNIPL-1102			
DRAWN BY					
CHECKED BY		DATE	SIZE	SCALE	SHEET
APPROVED BY		23-03-2023		N/A	SHEET 1 OF 1

* ALL DIMENSIONS IN MM

A4