REON LED

REON INDUSTRIES PVT.LTD

100W HIGHBAY SPOT LENS

RNIPL-0233

INPUT CHARACTERISTICS

- INPUT VOLTAGE.....100-300VAC
- INPUT CURRENT.....440 MA
- INPUT POWER.....100 WATT
- POWER FACTOR.....>0.95
- FREQUENCY.....50-60Hz
- EFFICIENCY.....85 %
- THD.....<10%

PROTECTION CHARACTERISTICS

- SURGE PROTECTION.....6+10KV SPD EXTRA
- OVER VOLTAGE PROTECTION.....YES
- UNDER VOLTAGE PROTECTION.....YES
- INGRESS PROTECTION (IP).....IP65

LED AND PCB CHARACTERISTICS

- LED AVERAGE LIFE.....50,000 Hrs
- NOS. OF LED.....100 NOS.
- LED LUMENS.....140L/W
- LED CRI.....80K
- LED COLOUR TEMP.....3000K/6500K
- LED PACKAGE.....2835
- LUMENS EFFICIENCY.....100L/W
- PCB SIZE.....Ø150 MM

ENVIRONMENT OPERATING DETAILS

- MAX. OPERATING TEMP.....10 TO 50 DEGREE
- LUMINARIES TYPE.....OUTDOOR

MECHANICAL DETAILS

- DIMENSIONS.....Ø254*120 MM
- FIXTURE MATERIAL.....ADC 12
- FIXTURE COATING.....POWDER COATING

KEY FEATURES

- HIGH VOLTAGE WITH STANDING CAPACITY – 440 VAC
- HIGH VOLTAGE CUTOFF AT 310 VAC
- AUTO RESTART AFTER SAFE VOLTAGE MODE
- COMPACT AND AESTHETIC DESIGN
- BETTER THERMAL MANAGEMENT
- OPTICAL LENS WITH SILICON
- GASKETS FOR INGRESS PROTECTION
- HIGH EFFICIENCY LONG LIFE LED

USAGE AND APPLICATION

- CAMPUS LIGHTING
- CONSTRUCTION SITE
- FACTORY LIGHTING
- ADVERTISE HOARDING
- SPORTS YARD
- PARKING LOT

WARRANTY – 2 YEARS

No 25/1 Appavu nagar Extension,Opp. Chennish Mahal,Thalli road, Hosur.635 109

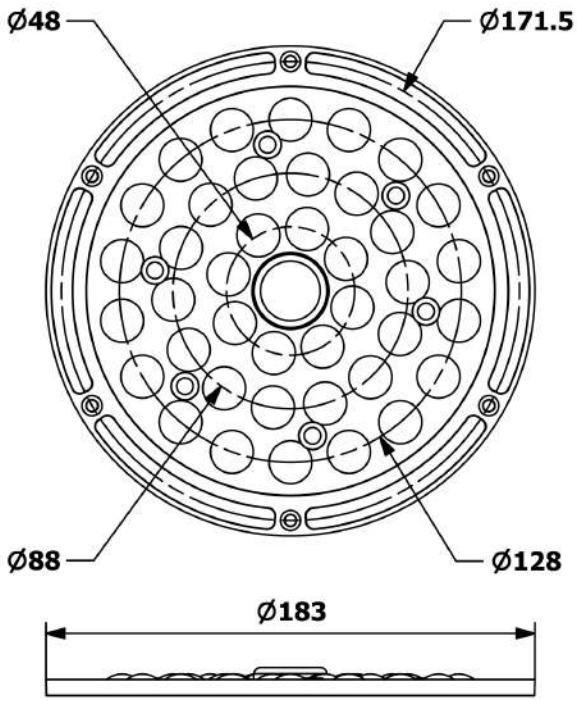

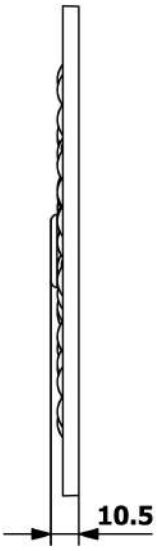

GENERAL INFORMATION -
1. Lens Material - Optical PC
2. Lens Weight - 100 gm

* ALL DIMENSIONS IN MM

REON INDUSTRIES PVT.LTD		TITLE - 100 W HIGHBAY SPOT LENS			
FIRST ISSUED		DRG NO. RNIPL-0233			
DRAWN BY					
CHECKED BY		DATE	SIZE	SCALE	SHEET
APPROVED BY		10-08-2024		N/A	SHEET 1 OF 1

A4

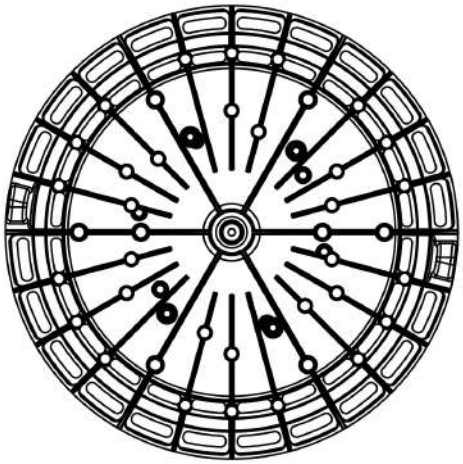

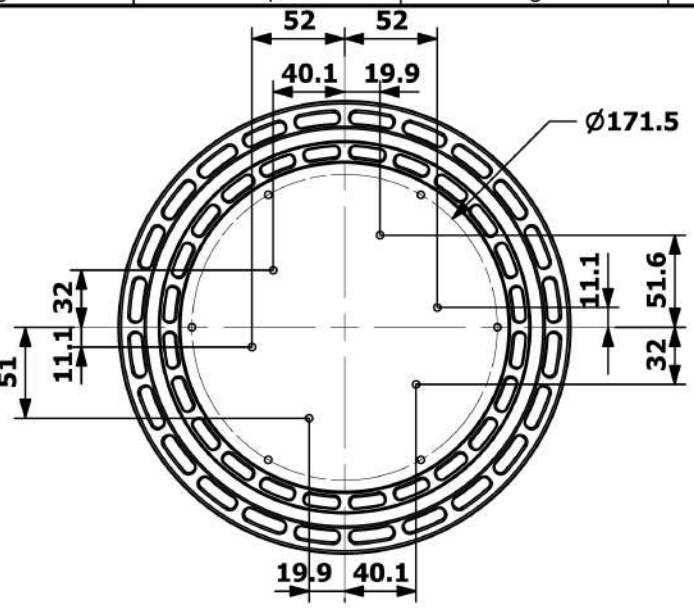

BODY WEIGHT	650 gm
DRIVER BOX WEIGHT	350 gm
PCB SIZE	Ø 150 mm
DRIVER AREA	175 X 100 X 60 mm
OVERALL DIM	Ø 254 x 165 mm
GROSS WEIGHT	1.160 kg

* ALL DIMENSIONS IN MM

REON INDUSTRIES PVT.LTD		TITLE - 100 W HIGHBAY SPOT LENS MODEL			
FIRST ISSUED		DRG NO. RNIPL-0233			
DRAWN BY					
CHECKED BY		DATE	SIZE	SCALE	SHEET
APPROVED BY		30-01-2024		N/A	SHEET 1 OF 1

A4

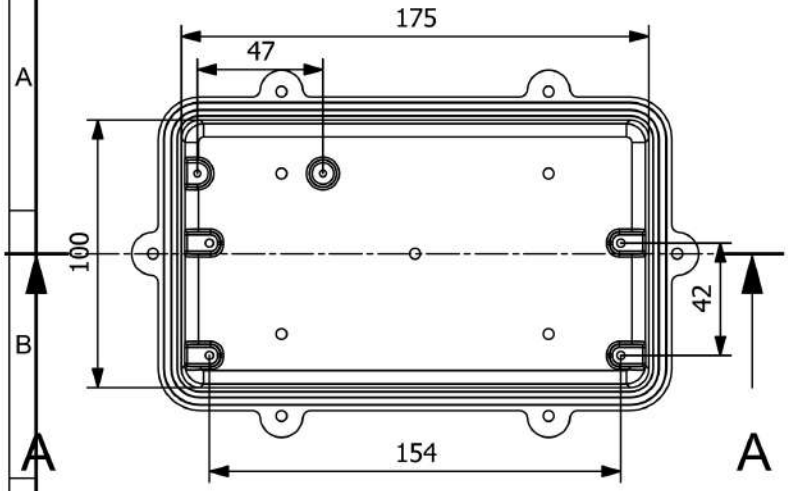

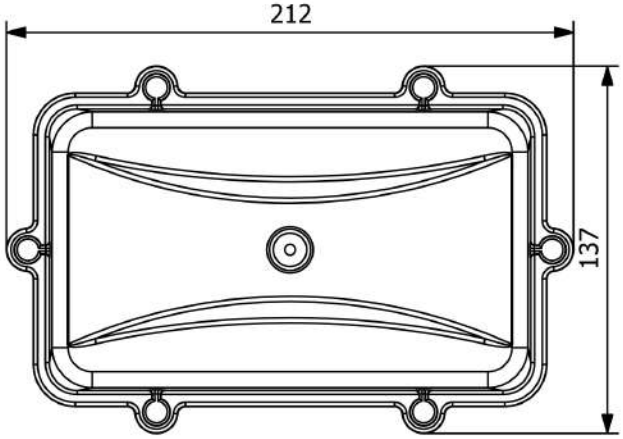

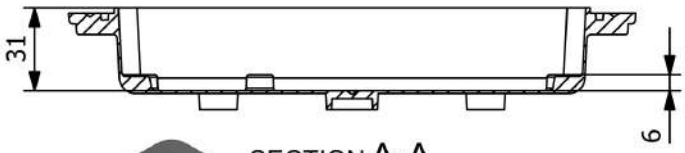

SECTION A-A

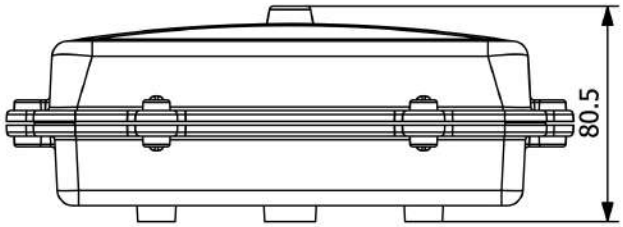

DRIVER BOX WEIGHT - 350 gm

* ALL DIMENSIONS IN MM

REON INDUSTRIES PVT.LTD		TITLE - **100 W HIGHBAY DRIVER BOX**			
FIRST ISSUED		DRG NO. RNIPL-0233			
DRAWN BY					
CHECKED BY		DATE	SIZE	SCALE	SHEET
APPROVED BY		30-01-2024		N/A	SHEET 1 OF 1

A4