REON LED

REON INDUSTRIES PVT.LTD

200W HIGHBAY SPOT LENS PRO

RNIPL-0235

INPUT CHARACTERISTICS

- INPUT VOLTAGE.....100-300VAC
- INPUT CURRENT.....880 MA
- INPUT POWER.....200 WATT
- POWER FACTOR.....>0.95
- FREQUENCY.....50-60Hz
- EFFICIENCY.....85 %
- THD.....<10%

PROTECTION CHARACTERISTICS

- SURGE PROTECTION.....6+10KV SPD EXTRA
- OVER VOLTAGE PROTECTION.....YES
- UNDER VOLTAGE PROTECTION.....YES
- INGRESS PROTECTION (IP).....IP65

LED AND PCB CHARACTERISTICS

- LED AVERAGE LIFE.....50,000 Hrs
- NOS. OF LED.....200 NOS.
- LED LUMENS.....140L/W
- LED CRI.....80K
- LED COLOUR TEMP.....3000K/6500K
- LED PACKAGE.....2835
- LUMENS EFFICIENCY.....100L/W
- PCB SIZE.....Ø260 MM

ENVIRONMENT OPERATING DETAILS

- MAX. OPERATING TEMP.....10 TO 50 DEGREE
- LUMINARIES TYPE.....OUTDOOR

MECHANICAL DETAILS

- DIMENSIONS.....Ø340*131 MM
- FIXTURE MATERIAL.....ADC 12
- FIXTURE COATING.....POWDER COATING

KEY FEATURES

- HIGH VOLTAGE WITH STANDING CAPACITY – 440 VAC
- HIGH VOLTAGE CUTOFF AT 310 VAC
- AUTO RESTART AFTER SAFE VOLTAGE MODE
- COMPACT AND AESTHETIC DESIGN
- BETTER THERMAL MANAGEMENT
- OPTICAL LENS WITH SILICON
- GASKETS FOR INGRESS PROTECTION
- HIGH EFFICIENCY LONG LIFE LED

USAGE AND APPLICATION

- CAMPUS LIGHTING
- CONSTRUCTION SITE
- FACTORY LIGHTING
- ADVERTISE HOARDING
- SPORTS YARD
- PARKING LOT

WARRANTY – 2 YEARS

No 25/1 Appavu nagar Extension,Opp. Chennish Mahal,Thalli road, Hosur.635 109

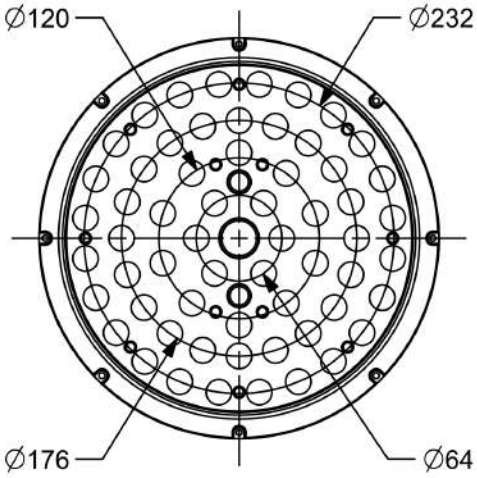

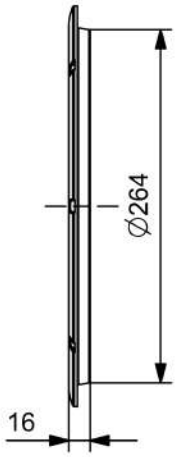

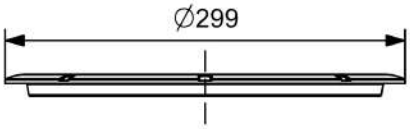

GENERAL INFORMATION -
1.LENS MATERIAL - OPTICAL PC
2.LENS WEIGHT - 272 gm

* ALL DIMENSIONS IN MM

REON INDUSTRIES PVT.LTD		TITLE - 200W HIGHBAY SPOT LENS PRO			
FIRST ISSUED		DRG NO. RNIPL-0235			
DRAWN BY					
CHECKED BY		DATE	SIZE	SCALE	SHEET
APPROVED BY		28-08-2023		N/A	SHEET 1 OF 1

A4

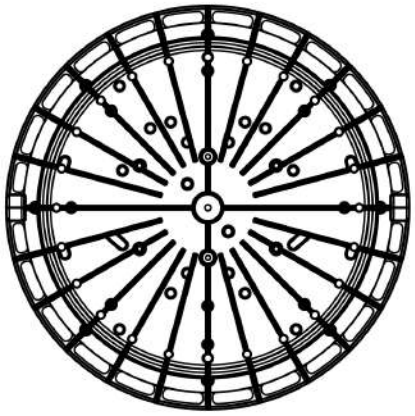

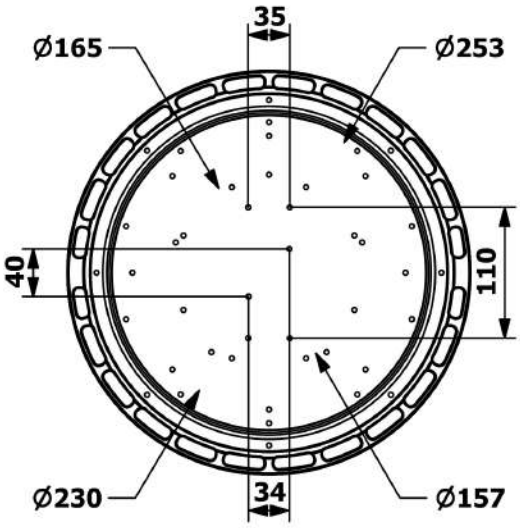

BODY WEIGHT	1.600 kg
FRAME WEIGHT	135 gm
DRIVER BOX WEIGHT	490 gm
PCB SIZE	Ø260 mm
DRIVER AREA	220 x 110 x 60 mm
OVERALL DIM	Ø340 x 131 mm
GROSS WEIGHT	2.920 kg

* ALL DIMENSIONS IN MM

REON INDUSTRIES PVT.LTD		TITLE - 200W HIGHBAY SPOT LENS PRO			
FIRST ISSUED		DRG NO. RNIPL-0235			
DRAWN BY					
CHECKED BY		DATE	SIZE	SCALE	SHEET
APPROVED BY		28-08-2023		N/A	SHEET 1 OF 1

A4

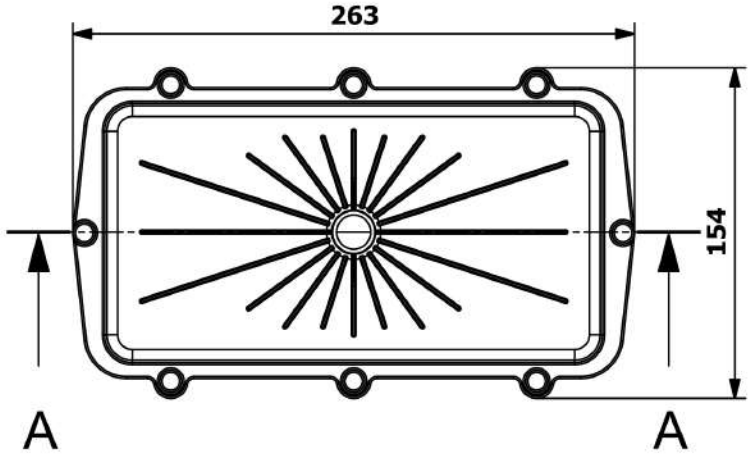

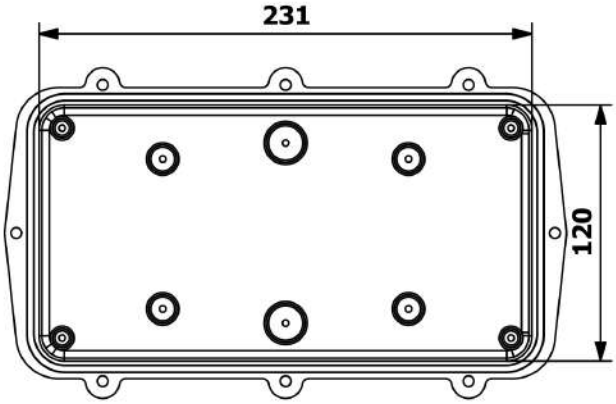

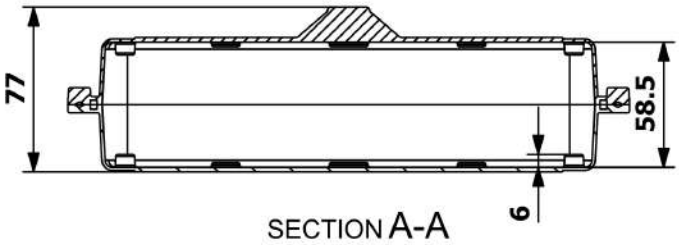

SECTION A-A

DRIVER BOX WEIGHT - 490 gm

* ALL DIMENSIONS IN MM

REON INDUSTRIES PVT.LTD		TITLE - 150W HIGHBAY SPOT LENS PRO			
FIRST ISSUED		DRG NO. RNIPL-0235			
DRAWN BY					
CHECKED BY		DATE	SIZE	SCALE	SHEET
APPROVED BY					SHEET 1 OF 1

A4