REON LED

REON INDUSTRIES PVT.LTD

24W ECO LENS STREET LIGHT

RNIPL-1100

INPUT CHARACTERISTICS

- INPUT VOLTAGE.....100-300VAC
- INPUT CURRENT.....110 MA
- INPUT POWER.....24 WATT
- POWER FACTOR.....>0.95
- FREQUENCY.....50-60Hz
- EFFICIENCY.....85 %
- THD.....<10%

PROTECTION CHARACTERISTICS

- SURGE PROTECTION.....4KV
- OVER VOLTAGE PROTECTION.....YES
- UNDER VOLTAGE PROTECTION.....YES
- INGRESS PROTECTION (IP).....IP65

LED AND PCB CHARACTERISTICS

- LED AVERAGE LIFE.....50,000 Hrs
- NOS. OF LED.....24 NOS.
- LED LUMENS.....140L/W
- LED CRI.....80K
- LED COLOUR TEMP.....3000K/6500K
- LED PACKAGE.....2835
- LUMENS EFFICIENCY.....100L/W
- PCB SIZE.....105*60 MM

ENVIRONMENT OPERATING DETAILS

- MAX. OPERATING TEMP.....10 TO 50 DEGREE
- LUMINARIES TYPE.....OUTDOOR

MECHANICAL DETAILS

- DIMENSIONS.....265*108*53 MM
- PIE DIA.....Ø45 MM
- FIXTURE MATERIAL.....ADC 12
- FIXTURE COATING.....POWDER COATING

KEY FEATURES

- HIGH VOLTAGE WITH STANDING CAPACITY – 440 VAC
- HIGH VOLTAGE CUTOFF AT 310 VAC
- AUTO RESTART AFTER SAFE VOLTAGE MODE
- COMPACT AND AESTHETIC DESIGN
- BETTER THERMAL MANAGEMENT
- OPTICAL LENS WITH SILICON
- GASKETS FOR INGRESS PROTECTION
- HIGH EFFICIENCY LONG LIFE LED

USAGE AND APPLICATION

- COMPLEX
- MANUFACTURING PLANT
- CAR PARKING
- RESORTS
- GARDEN AND PARK
- TOWNSHIP
- ROADWAY LIGHTING

WARRANTY – 2 YEARS

No 25/1 Appavu nagar Extension,Opp. Chennish Mahal,Thalli road, Hosur.635 109

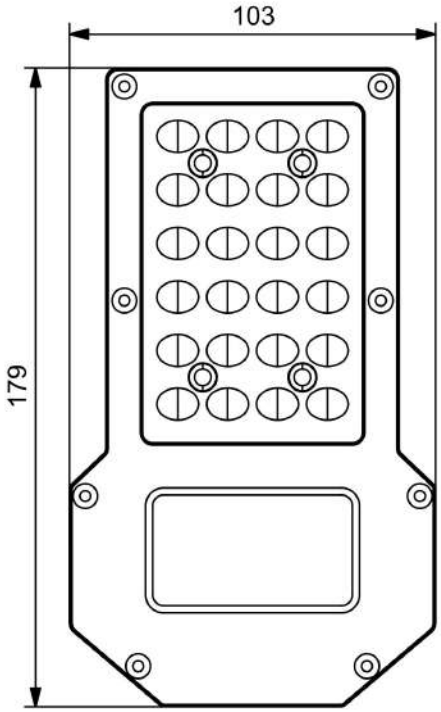

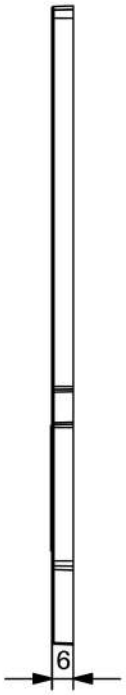

GENERAL INFORMATION -
1.LENS MATERIAL - OPTICAL PC
2.LENS WEIGHT - 50 gm

* ALL DIMENSIONS IN MM

REON INDUSTRIES PVT.LTD		TITLE - 24W ECO LENS STREET LIGHT			
FIRST ISSUED		DRG NO. RNIPL-1100			
DRAWN BY					
CHECKED BY		DATE	SIZE	SCALE	SHEET
APPROVED BY		23-03-2023		N/A	SHEET 1 OF 1

A4

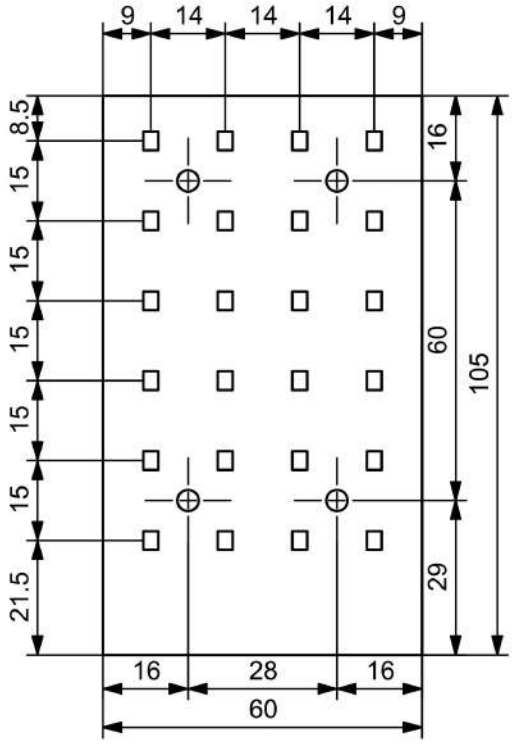

REON INDUSTRIES PVT.LTD		TITLE - 24W ECO LENS STREET LIGHT			
FIRST ISSUED		DRG NO. RNIPL-1100			
DRAWN BY					
CHECKED BY		DATE	SIZE	SCALE	SHEET
APPROVED BY		23-03-2023		N/A	SHEET 1 OF 1

* ALL DIMENSIONS IN MM

A4

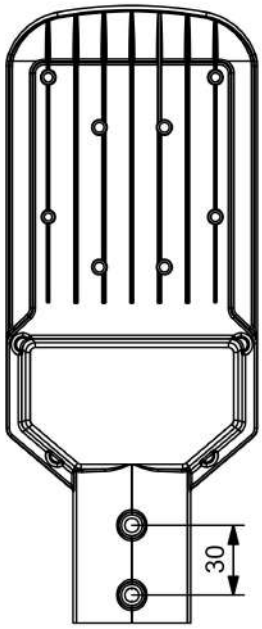

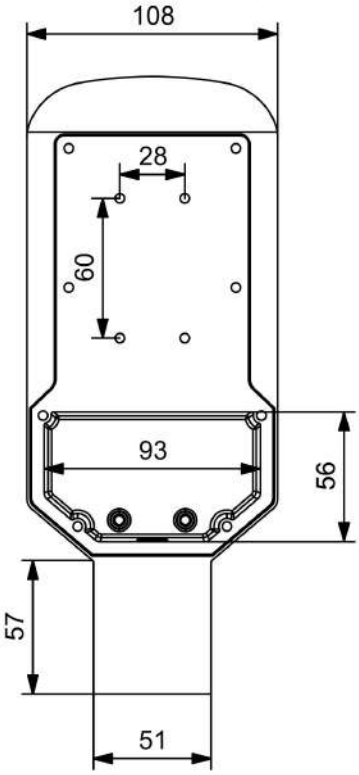

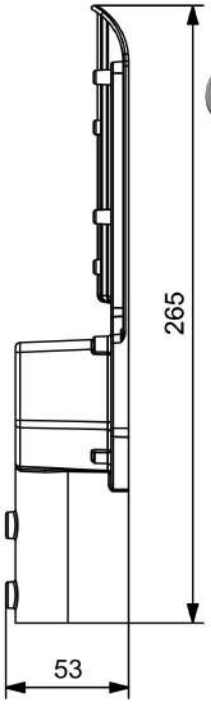

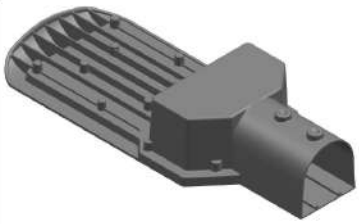

BODY WEIGHT	240 gm
PCB SIZE	105 x 60 mm
DRIVER AREA	93 x 56 x 41 mm
OVERALL DIM	265 x 108 x 53 mm
PIPE DIA	45 mm
GROSS WEIGHT	320 gm

* ALL DIMENSIONS IN MM

REON INDUSTRIES PVT.LTD		TITLE - 24W ECO LENS STREET LIGHT			
FIRST ISSUED		DRG NO. RNIPL-1100			
DRAWN BY					
CHECKED BY		DATE	SIZE	SCALE	SHEET
APPROVED BY		23-03-2023		N/A	SHEET 1 OF 1

A4