REON LED

REON INDUSTRIES PVT.LTD

150W HIGHBAY SPOT LENS

RNIPL-0234

INPUT CHARACTERISTICS

- INPUT VOLTAGE.....100-300VAC
- INPUT CURRENT.....660 MA
- INPUT POWER.....150 WATT
- POWER FACTOR.....>0.95
- FREQUENCY.....50-60Hz
- EFFICIENCY.....85 %
- THD.....<10%

PROTECTION CHARACTERISTICS

- SURGE PROTECTION.....6+10KV SPD EXTRA
- OVER VOLTAGE PROTECTION.....YES
- UNDER VOLTAGE PROTECTION.....YES
- INGRESS PROTECTION (IP).....IP65

LED AND PCB CHARACTERISTICS

- LED AVERAGE LIFE.....50,000 Hrs
- NOS. OF LED.....150 NOS.
- LED LUMENS.....140L/W
- LED CRI.....80K
- LED COLOUR TEMP.....3000K/6500K
- LED PACKAGE.....2835
- LUMENS EFFICIENCY.....100L/W
- PCB SIZE.....Ø192 MM

ENVIRONMENT OPERATING DETAILS

- MAX. OPERATING TEMP.....10 TO 50 DEGREE
- LUMINARIES TYPE.....OUTDOOR

MECHANICAL DETAILS

- DIMENSIONS.....Ø320*123 MM
- FIXTURE MATERIAL.....ADC 12
- FIXTURE COATING.....POWDER COATING

KEY FEATURES

- HIGH VOLTAGE WITH STANDING CAPACITY – 440 VAC
- HIGH VOLTAGE CUTOFF AT 310 VAC
- AUTO RESTART AFTER SAFE VOLTAGE MODE
- COMPACT AND AESTHETIC DESIGN
- BETTER THERMAL MANAGEMENT
- OPTICAL LENS WITH SILICON
- GASKETS FOR INGRESS PROTECTION
- HIGH EFFICIENCY LONG LIFE LED

USAGE AND APPLICATION

- CAMPUS LIGHTING
- CONSTRUCTION SITE
- FACTORY LIGHTING
- ADVERTISE HOARDING
- SPORTS YARD
- PARKING LOT

WARRANTY – 2 YEARS

No 25/1 Appavu nagar Extension,Opp. Chennish Mahal,Thalli road, Hosur.635 109

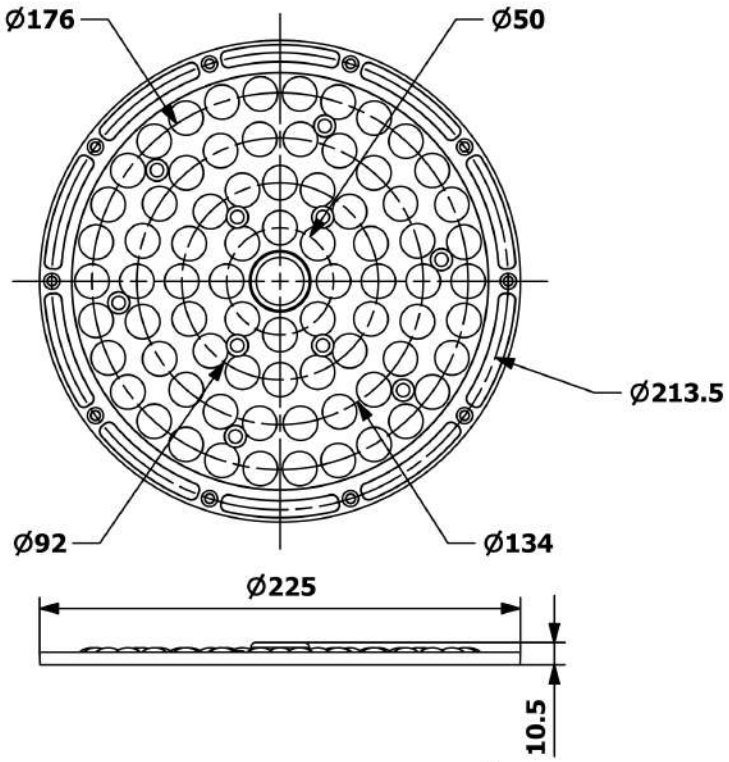

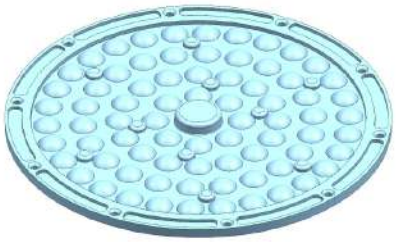

SPOT LENS WEIGHT - 150 gm

REON INDUSTRIES PVT.LTD		TITLE - 150W HIGHBAY SPOT LENS			
FIRST ISSUED		DRG NO. RNIPL-0234			
DRAWN BY					
CHECKED BY		DATE	SIZE	SCALE	SHEET
APPROVED BY		10-08-2024		N/A	SHEET 1 OF 1

* ALL DIMENSIONS IN MM

A4

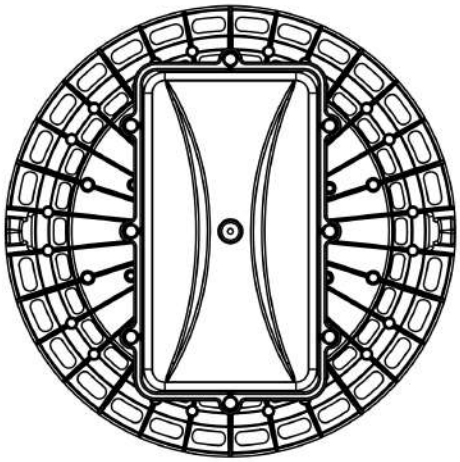

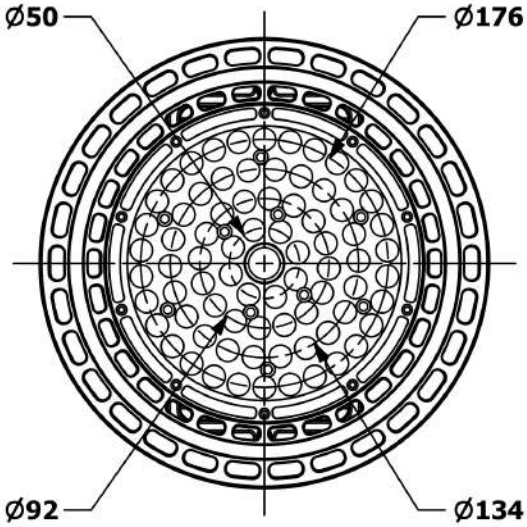

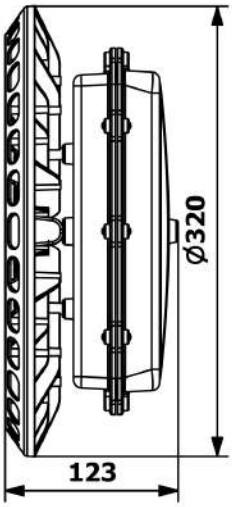

BODY WEIGHT	1.095 kg
LENS WEIGHT	150 gm
DRIVER BOX WEIGHT	480 gm
PCB SIZE	Ø 192 mm
DRIVER AREA	220 X 120 X 60 mm
OVERALL DIM	Ø 320 X 123 mm
GROSS WEIGHT	1.785 kg

LENS POCKET	76 NOS
LENS DEGREE	90°

REON INDUSTRIES PVT.LTD

TITLE - 150W HIGHBAY SPOT LENS

DRG NO. RNIPL-0234

FIRST ISSUED					
DRAWN BY					
CHECKED BY		DATE	SIZE	SCALE	SHEET
APPROVED BY		18-12-2024		N/A	SHEET 1 OF 1

* ALL DIMENSIONS IN MM

A4

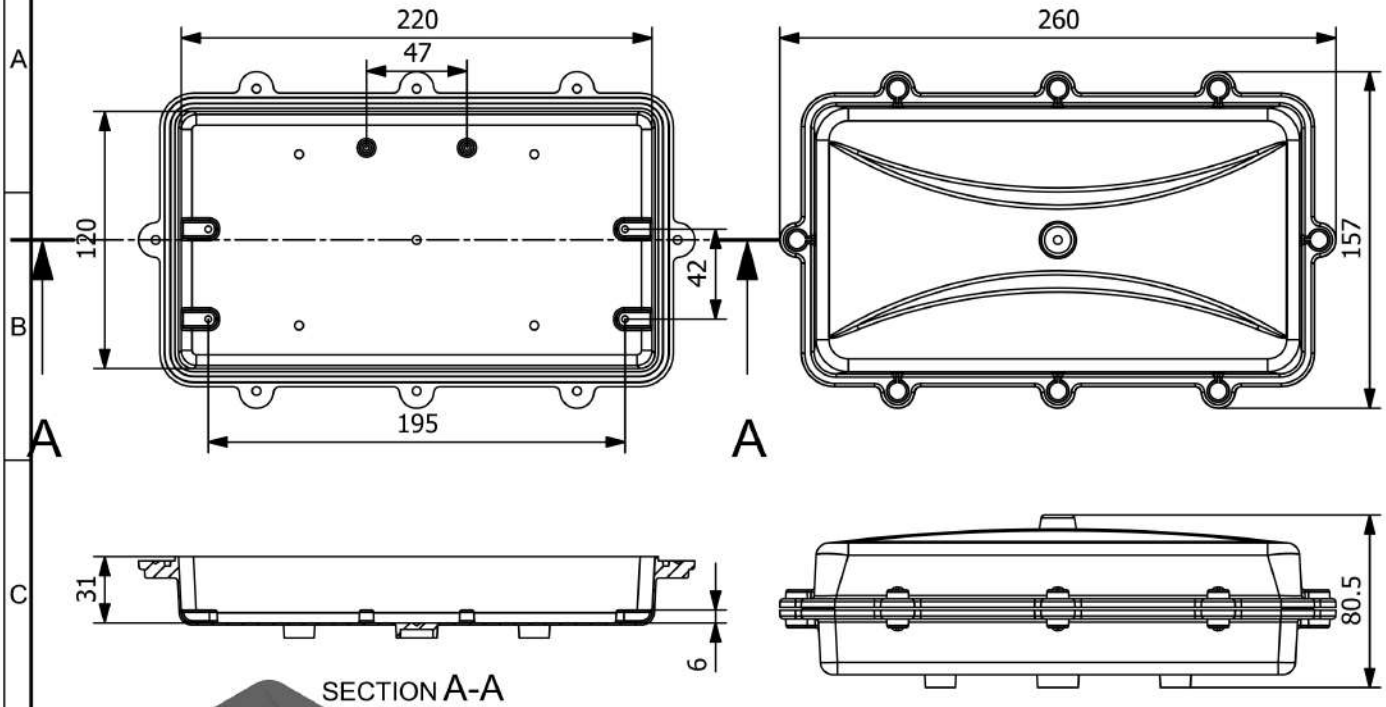

DRIVER BOX WEIGHT - 450 gm

* ALL DIMENSIONS IN MM

REON INDUSTRIES PVT.LTD		TITLE - 150 W HIGHBAY DRIVER BOX			
FIRST ISSUED		DRG NO. RNIPL-0234			
DRAWN BY					
CHECKED BY		DATE	SIZE	SCALE	SHEET
APPROVED BY		30-01-2024		N/A	SHEET 1 OF 1

A4