REON LED

REON INDUSTRIES PVT.LTD

100W WELL GLASS CLEAR

RNIPL-324

INPUT CHARACTERISTICS

- INPUT VOLTAGE.....100-300VAC
- INPUT CURRENT.....180 MA
- INPUT POWER.....100WATT
- POWER FACTOR.....>0.95
- FREQUENCY.....50-60Hz
- EFFICIENCY.....85 %
- THD.....<10%

PROTECTION CHARACTERISTICS

- SURGE PROTECTION.....6KV
- OVER VOLTAGE PROTECTION.....YES
- UNDER VOLTAGE PROTECTION.....YES
- INGRESS PROTECTION (IP).....IP65

LED AND PCB CHARACTERISTICS

- LED AVERAGE LIFE.....50,000 Hrs
- NOS. OF LED.....100NOS.
- LED LUMENS.....140L/W
- LED CRI.....80K
- LED COLOUR TEMP.....3000K/6500K
- LED PACKAGE.....2835
- LUMENS EFFICIENCY.....100L/W
- PCB SIZE.....Ø113 MM

ENVIRONMENT OPERATING DETAILS

- MAX. OPERATING TEMP.....10 TO 50 DEGREE
- LUMINARIES TYPE.....OUTDOOR

MECHANICAL DETAILS

- DIMENSIONS.....Ø146*135 MM
- FIXTURE MATERIAL.....ADC 12
- FIXTURE COATING.....POWDER COATING

KEY FEATURES

- HIGH VOLTAGE WITH STANDING CAPACITY – 440 VAC
- HIGH VOLTAGE CUTOFF AT 310 VAC
- AUTO RESTART AFTER SAFE VOLTAGE MODE
- COMPACT AND AESTHETIC DESIGN
- BETTER THERMAL MANAGEMENT
- OPTICAL LENS WITH SILICON
- GASKETS FOR INGRESS PROTECTION
- HIGH EFFICIENCY LONG LIFE LED

USAGE AND APPLICATION

- CAMPUS LIGHTING
- CONSTRUCTION SITE
- FACTORY LIGHTING
- ADVERTISE HOARDING
- SPORTS YARD
- PARKING LOT

WARRANTY – 2 YEARS

No 25/1 Appavu nagar Extension,Opp. Chennish Mahal,Thalli road, Hosur.635 109

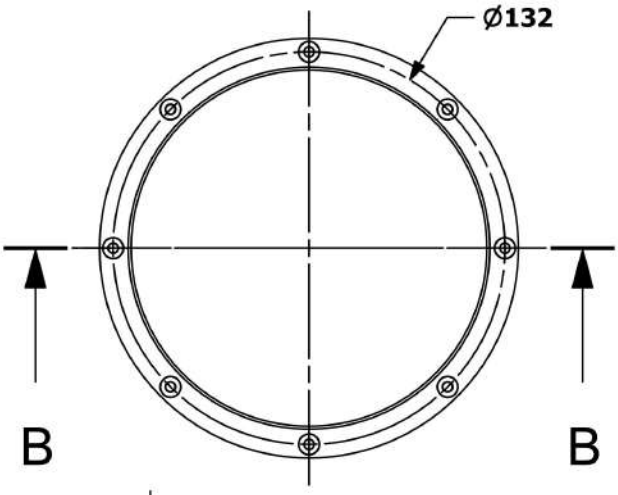

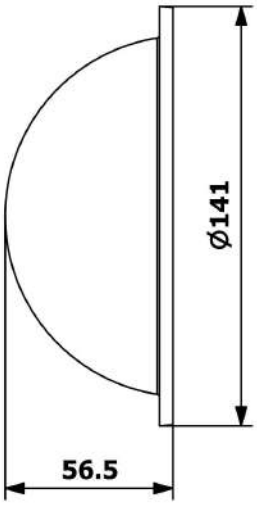

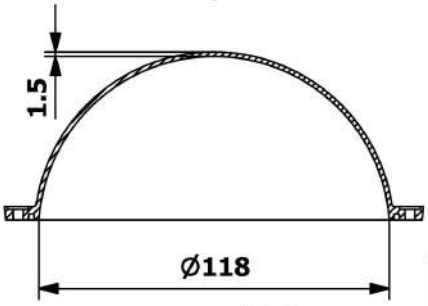

SECTION B-B

DOME WEIGHT - 54 gm

* ALL DIMENSIONS IN MM

REON INDUSTRIES PVT.LTD		TITLE - 50W MILKY WELL GLASS			
FIRST ISSUED		DRG NO. RNIPL-321			
DRAWN BY					
CHECKED BY		DATE	SIZE	SCALE	SHEET
APPROVED BY		19-11-2024		N/A	SHEET 1 OF 1

A4

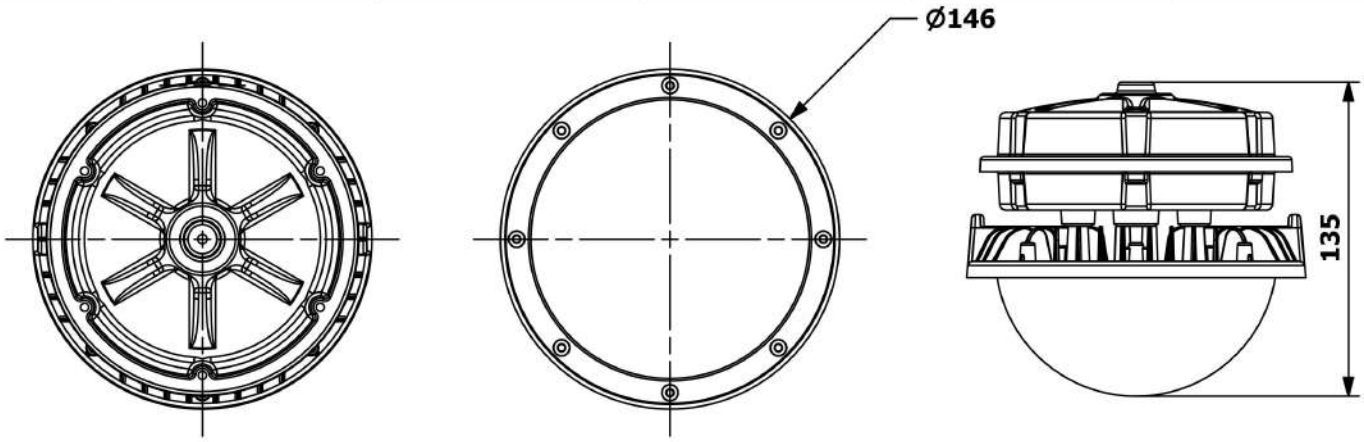

BODY WEIGHT	215 gm
DRIVER BOX WEIGHT	185 gm
PCB SIZE	Ø 113 mm
OVERALL DIM	Ø 146 X 135 mm
GROSS WEIGHT	

* ALL DIMENSIONS IN MM

REON INDUSTRIES PVT.LTD		TITLE - 50W MILKY WELL GLASS			
FIRST ISSUED		DRG NO. RNIPL-321			
DRAWN BY					
CHECKED BY		DATE	SIZE	SCALE	SHEET
APPROVED BY		19-11-2024		N/A	SHEET 1 OF 1

A4

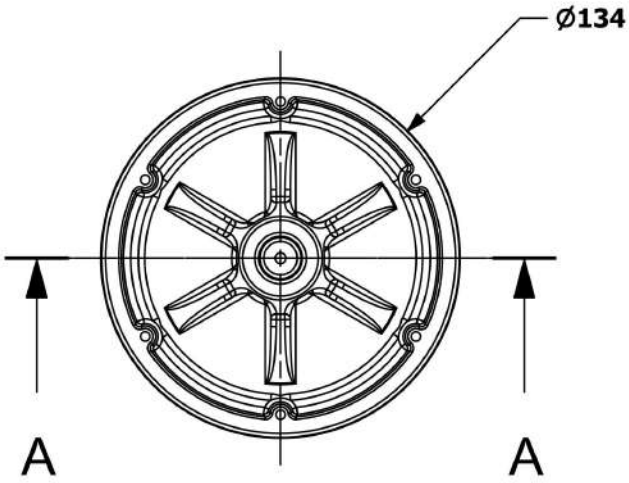

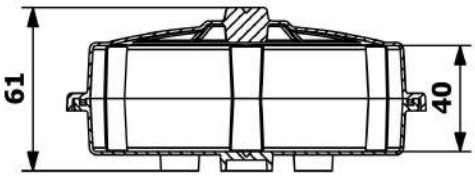

SECTION A-A

DRIVER BOX WEIGHT - 185 gm

* ALL DIMENSIONS IN MM

REON INDUSTRIES PVT.LTD		TITLE - 50W MILKY WELL GLASS			
FIRST ISSUED		DRG NO. RNIPL-321			
DRAWN BY					
CHECKED BY		DATE	SIZE	SCALE	SHEET
APPROVED BY		19-11-2024		N/A	SHEET 1 OF 1

A4