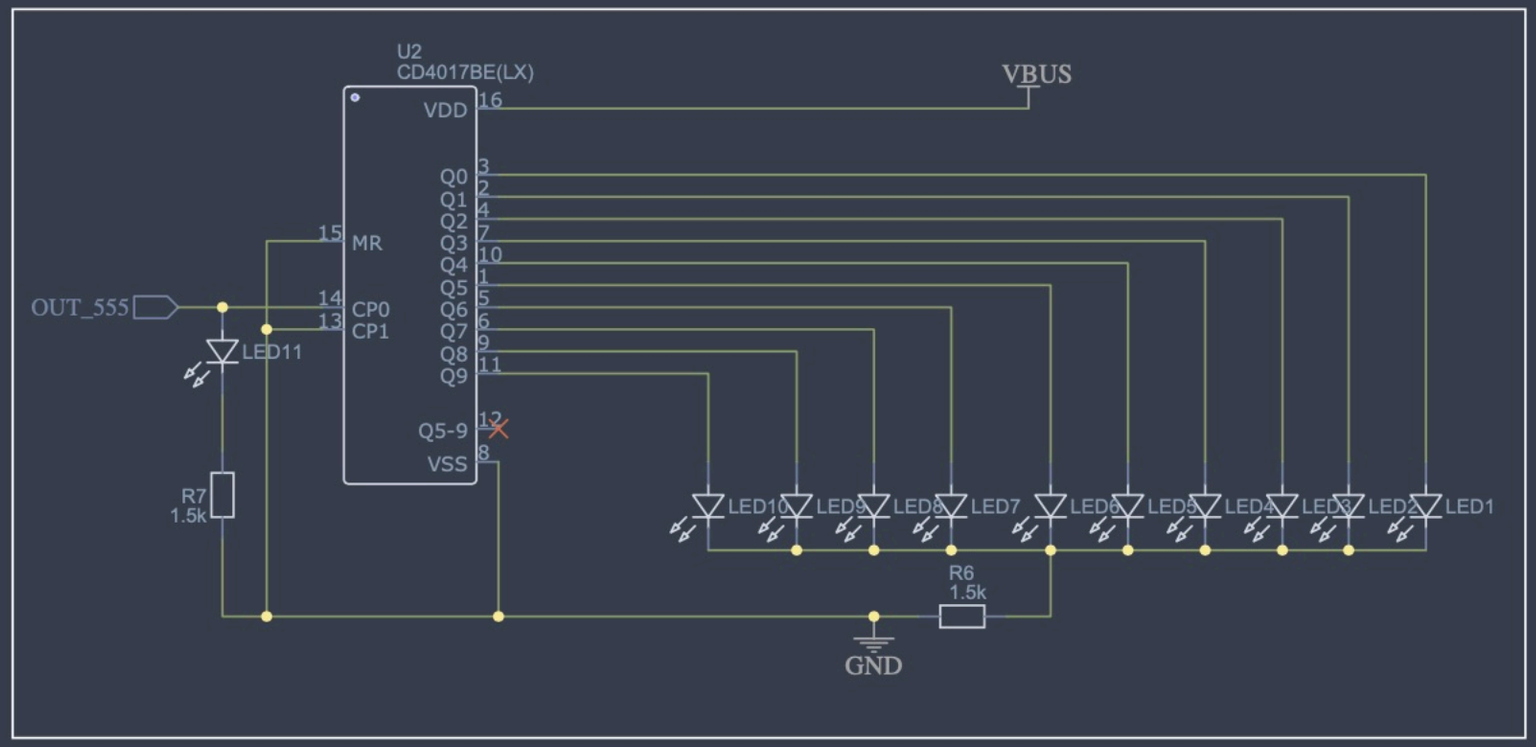

Counter CD4017 IC

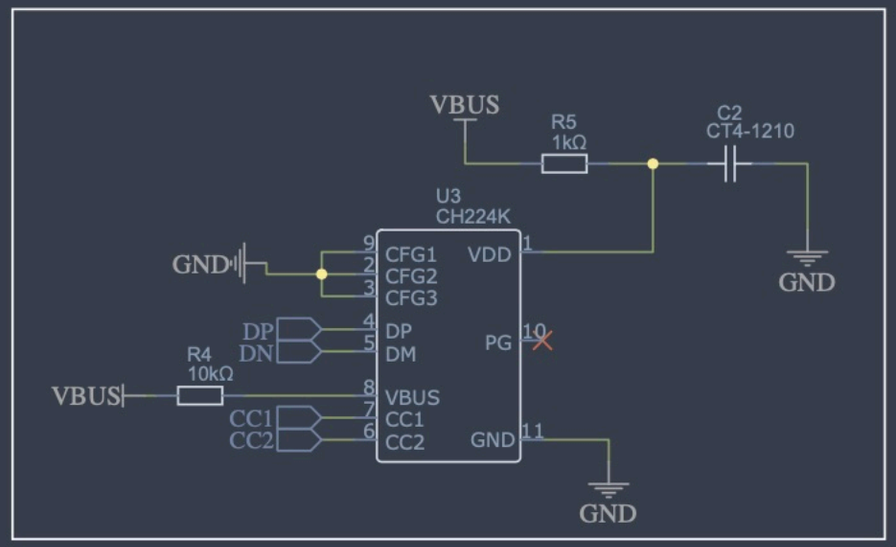

CH224k

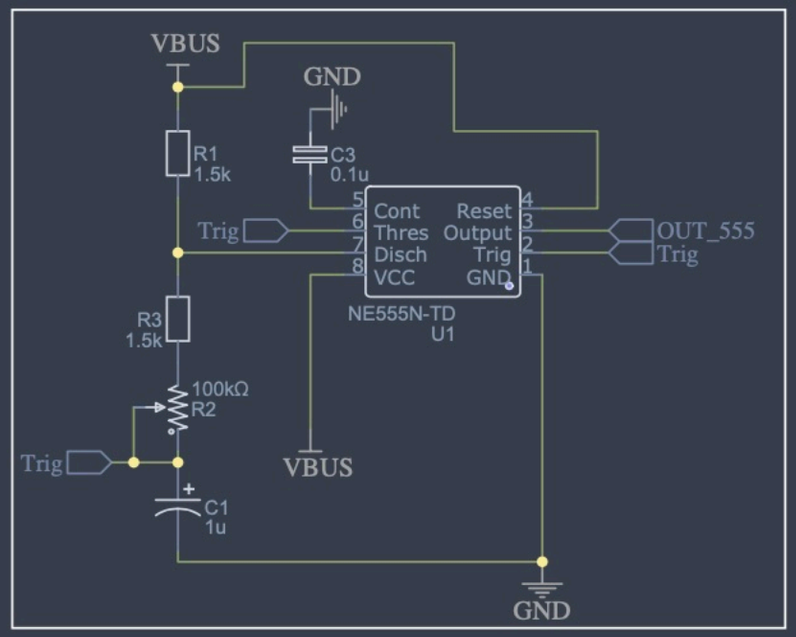

Timer NE555 IC

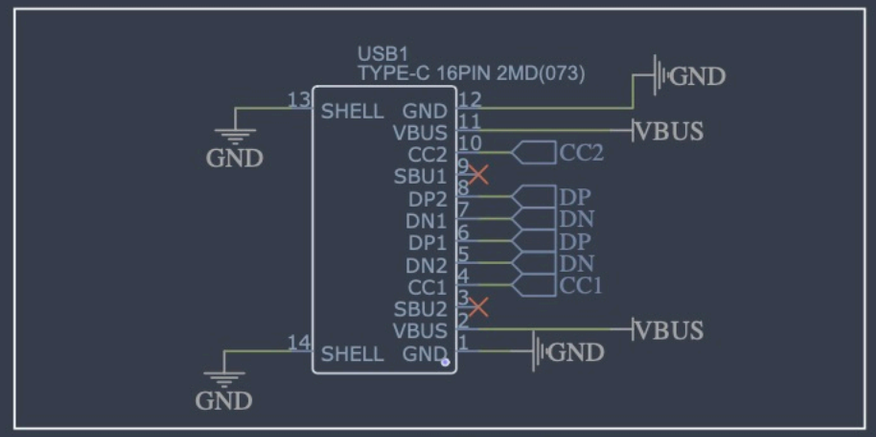

USB-Type-C

TITLE: LED_CHASER_555		REV: 1.0
EasyEDA	Company: Your Company	Sheet: 1/1
	Date: 2025-06-23	Drawn By: alshehri.sumayyah