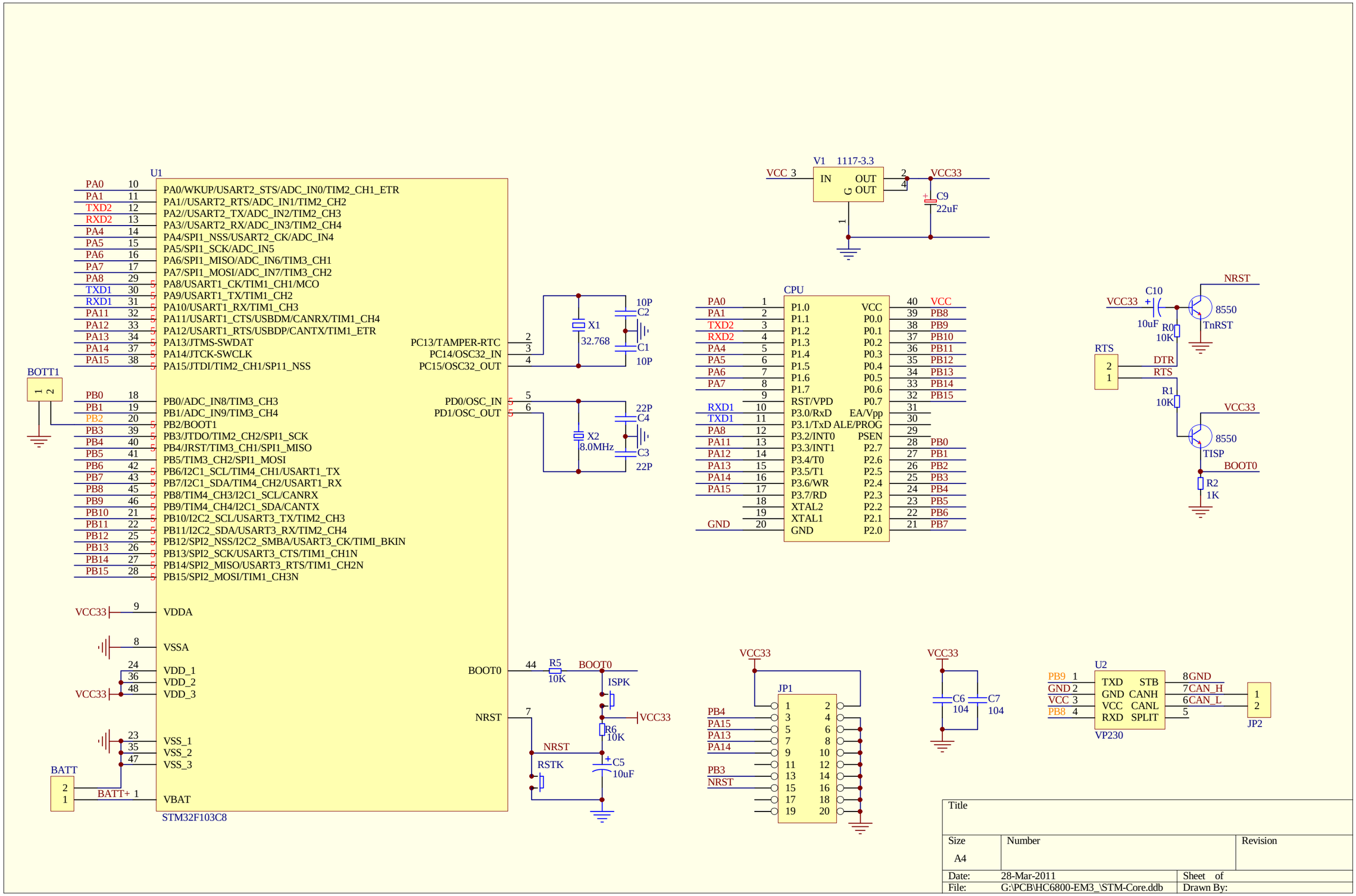
U1
PA0/WKUP/USART2_STS/ADC_IN0/TIM2_CH1_ETR
PA1//USART2_RTS/ADC_IN1/TIM2_CH2
PA2//USART2_TX/ADC_IN2/TIM2_CH3
PA3//USART2_RX/ADC_IN3/TIM2_CH4
PA4/SPI1_NSS/USART2_CK/ADC_IN4
PA5/SPI1_SCK/ADC_IN5
PA6/SPI1_MISO/ADC_IN6/TIM3_CH1
PA7/SPI1_MOSI/ADC_IN7/TIM3_CH2
PA8/USART1_CK/TIM1_CH1/MCO
PA9/USART1_TX/TIM1_CH2
PA10/USART1_RX/TIM1_CH3
PA11/USART1_CTS/USBDM/CANRX/TIM1_CH4
PA12/USART1_RTS/USBDP/CANTX/TIM1_ETR
PA13/JTMS-SWDAT
PA14/JTCK-SWCLK
PA15/JTDI/TIM2_CH1/SP11_NSS
PB0/ADC_IN8/TIM3_CH3
PB1/ADC_IN9/TIM3_CH4
PB2/BOOT1
PB3/JTDO/TIM2_CH2/SPI1_SCK
PB4/JRST/TIM3_CH1/SPI1_MISO
PB5/TIM3_CH2/SPI1_MOSI
PB6/I2C1_SCL/TIM4_CH1/USART1_TX
PB7/I2C1_SDA/TIM4_CH2/USART1_RX
PB8/TIM4_CH3/I2C1_SCL/CANRX
PB9/TIM4_CH4/I2C1_SDA/CANTX
PB10/I2C2_SCL/USART3_TX/TIM2_CH3
PB11/I2C2_SDA/USART3_RX/TIM2_CH4
PB12/SPI2_NSS/I2C2_SMBA/USART3_CK/TIMI_BKIN
PB13/SPI2_SCK/USART3_CTS/TIM1_CH1N
PB14/SPI2_MISO/USART3_RTS/TIM1_CH2N
PB15/SPI2_MOSI/TIM1_CH3N
VDDA
VSSA
VDD_1
VDD_2
VDD_3
VSS_1
VSS_2
VSS_3
VBAT
PC13/TAMPER-RTC
PC14/OSC32_IN
PC15/OSC32_OUT
PD0/OSC_IN
PD1/OSC_OUT
BOOT0
NRST
STM32F103C8
BOTT1
BATT
BATT+
X1
32.768
X2
8.0MHz
10P
C2
C1
22P
C4
C3
R5
10K
ISPK
R6
10K
C5
10uF
RSTK
V1 1117-3.3
VCC 3
IN
OUT
G OUT
VCC33
C9
22uF
CPU
P1.0
P1.1
P1.2
P1.3
P1.4
P1.5
P1.6
P1.7
RST/VPD
P3.0/RxD
P3.1/TxD
P3.2/INT0
P3.3/INT1
P3.4/T0
P3.5/T1
P3.6/WR
P3.7/RD
XTAL2
XTAL1
GND
VCC
P0.0
P0.1
P0.2
P0.3
P0.4
P0.5
P0.6
P0.7
EA/Vpp
ALE/PROG
PSEN
P2.7
P2.6
P2.5
P2.4
P2.3
P2.2
P2.1
P2.0
C10
10uF
R0
10K
8550
TnRST
NRST
RTS
DTR
R1
10K
8550
TISP
BOOT0
R2
1K
JP1
C6
104
C7
104
U2
TXD
GND
VCC
RXD
STB
CANH
CANL
SPLIT
GND
CAN_H
CAN_L
VP230
JP2
Title
Size
A4
Number
Revision
Date: 28-Mar-2011
Sheet of
File: G:\PCB\HC6800-EM3_\STM-Core.ddb
Drawn By: