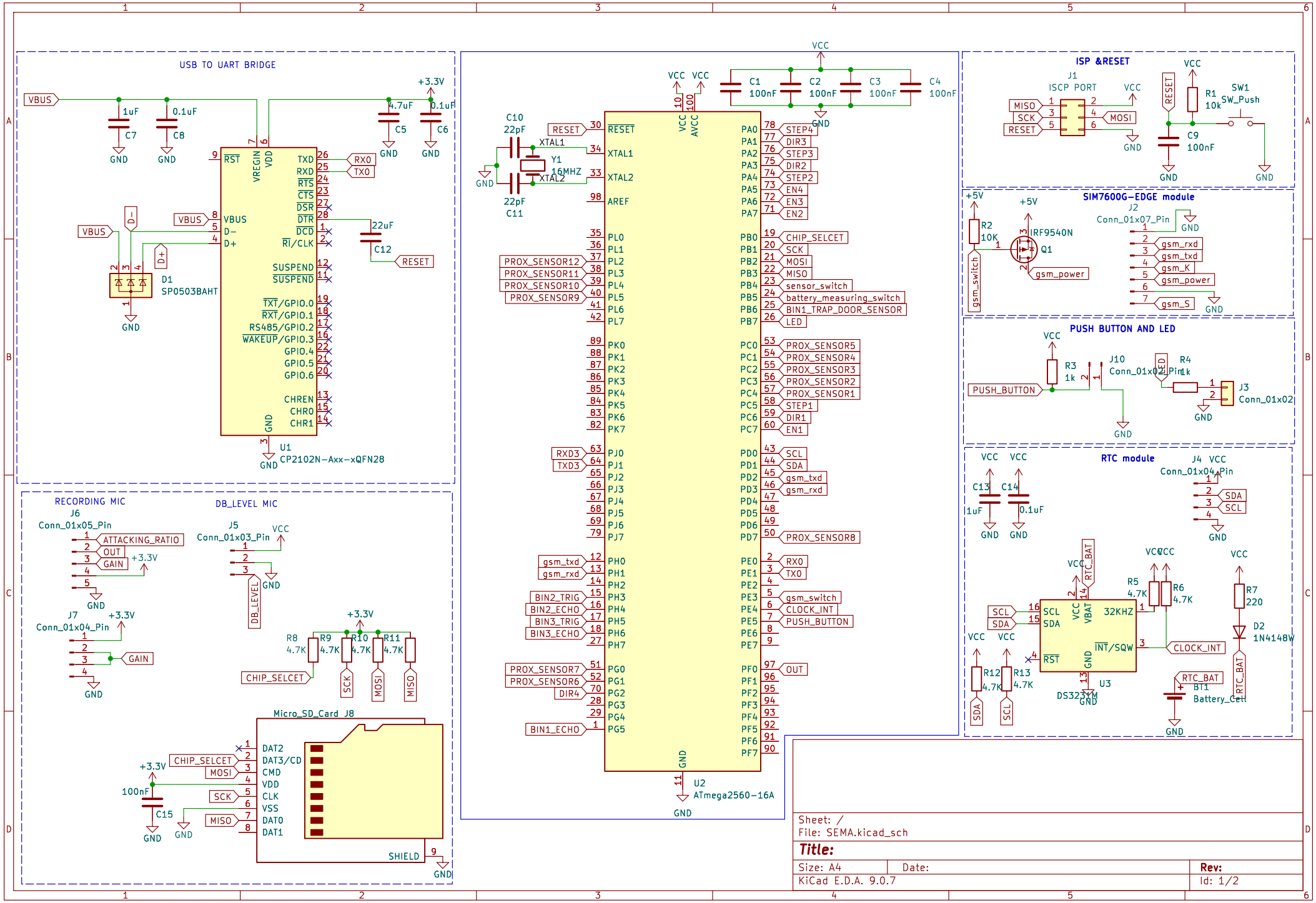
USB TO UART BRIDGE
U1
CP2102N-Axx-xQFN28
D1
SP0503BAHT
RECORDING MIC
J6
Conn_01x05_Pin
ATTACKING_RATIO
OUT
GAIN
J7
Conn_01x04_Pin
DB_LEVEL MIC
J5
Conn_01x03_Pin
DB_LEVEL
Micro_SD_Card J8
U2
ATmega2560-16A
ISP &RESET
J1
ISCP PORT
SW1
SW_Push
SIM7600G-EDGE module
J2
Conn_01x07_Pin
IRF9540N
Q1
PUSH BUTTON AND LED
J10
Conn_01x02_Pin
J3
Conn_01x02
RTC module
J4
Conn_01x04_Pin
U3
DS3231M
BT1
Battery_Cell
D2
1N4148W
Sheet: /
File: SEMA.kicad_sch
Title:
Size: A4
Date:
Rev:
KiCad E.D.A. 9.0.7
Id: 1/2

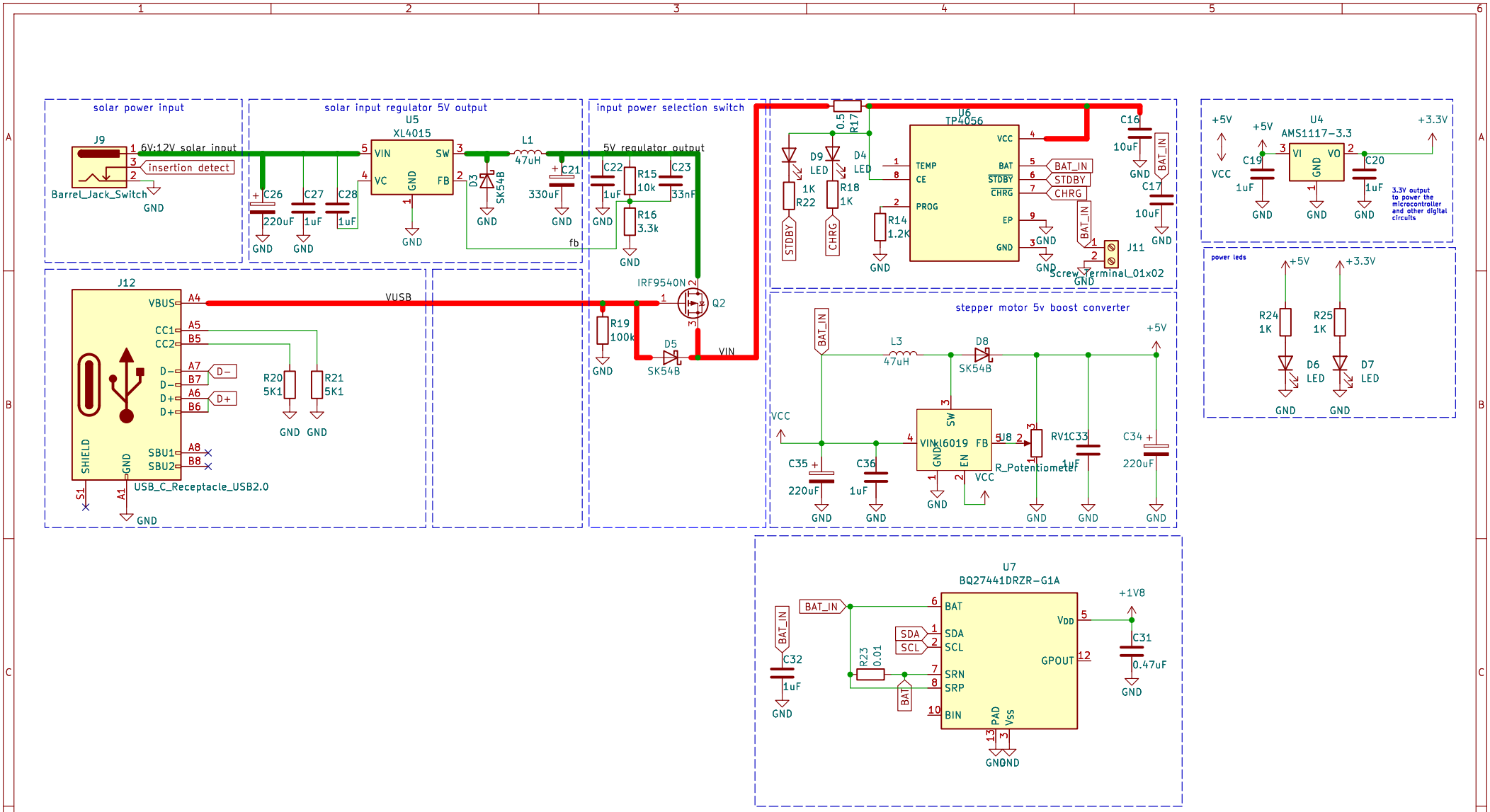

Sheet: /battery_power_management/
File: untitled.kicad_sch

Title:

Size: A4	Date:	Rev:
KiCad E.D.A. 9.0.7		Id: 2/2