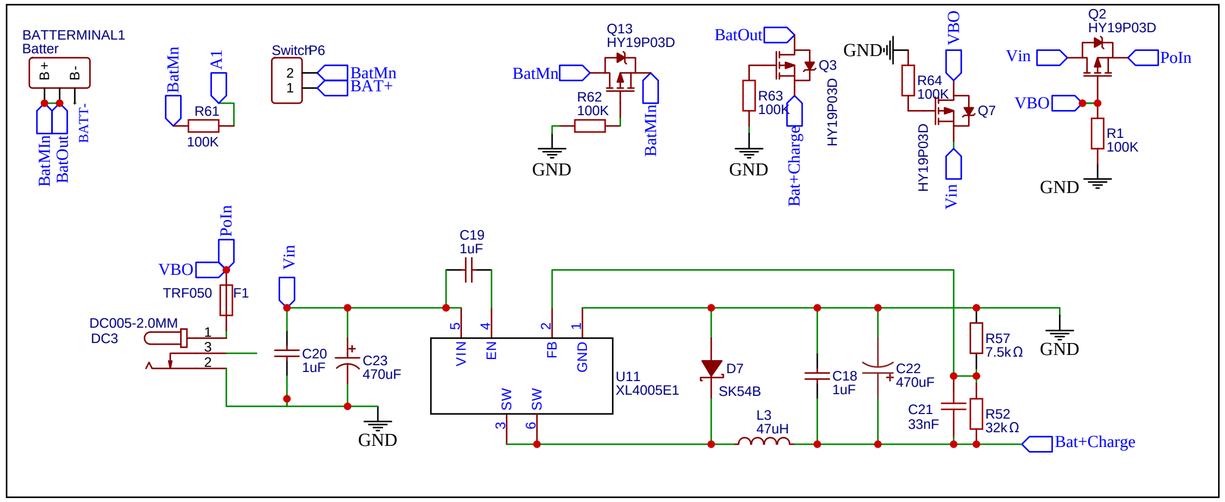

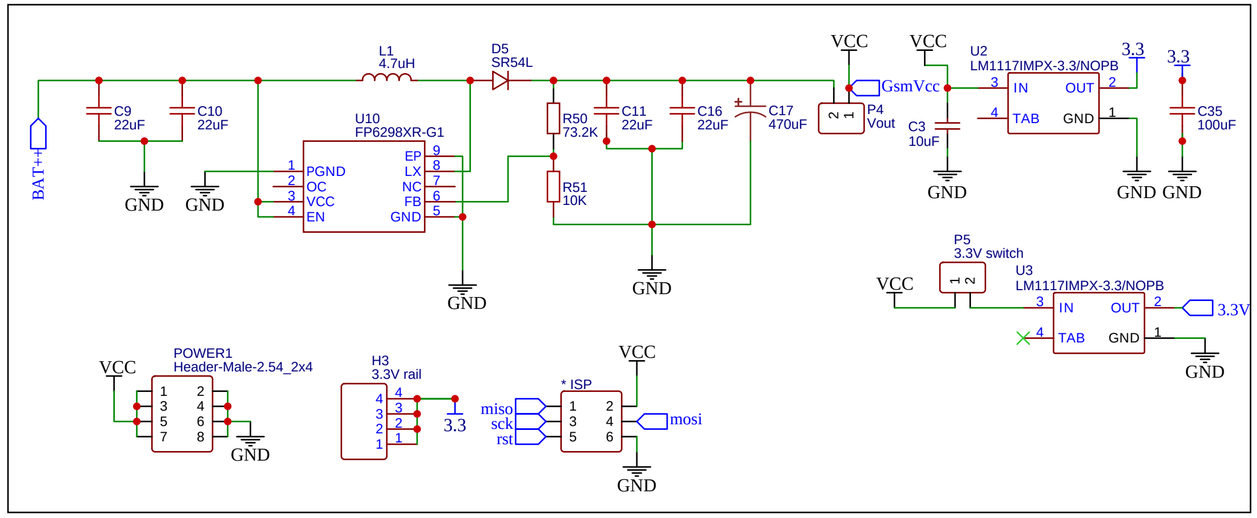

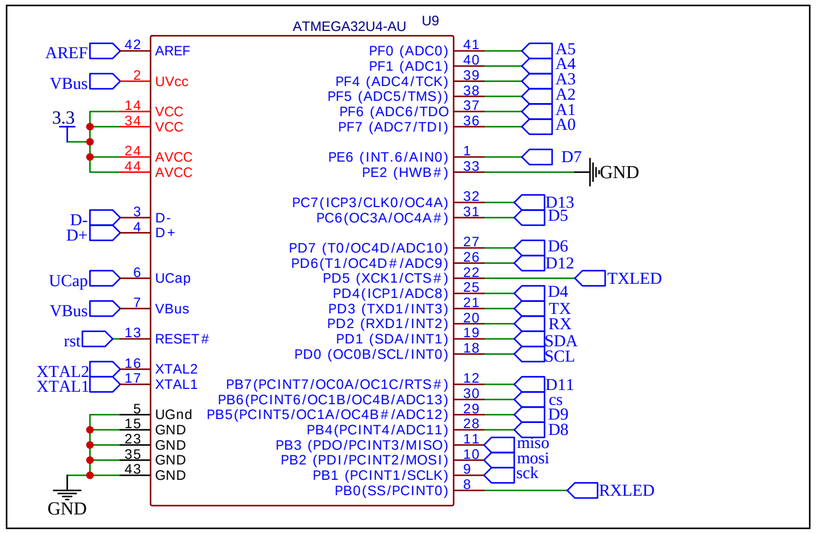

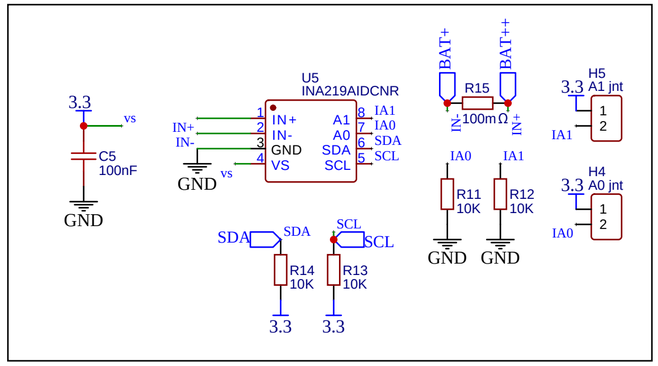

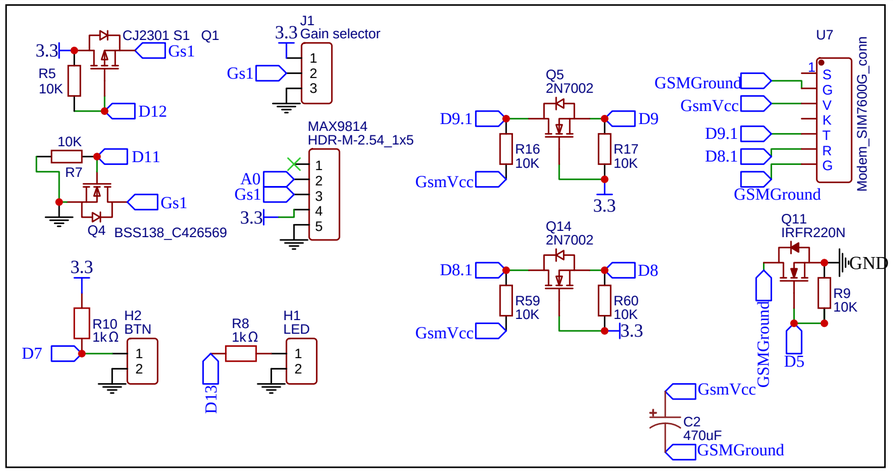

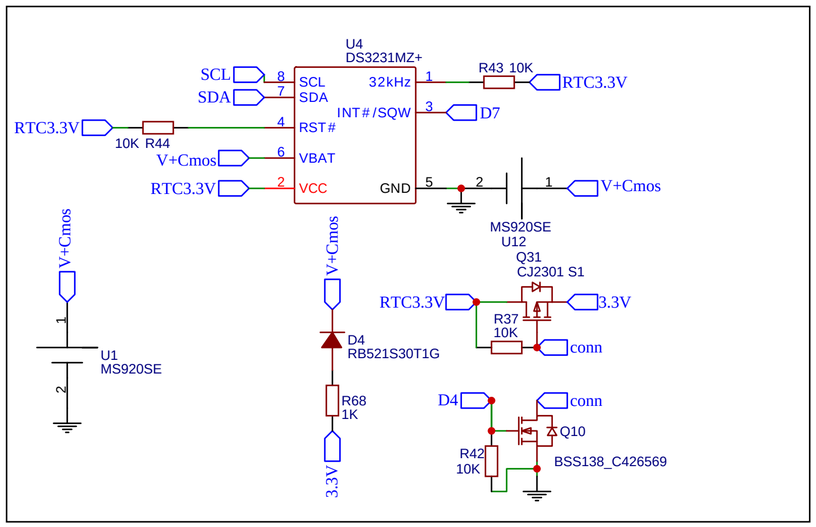

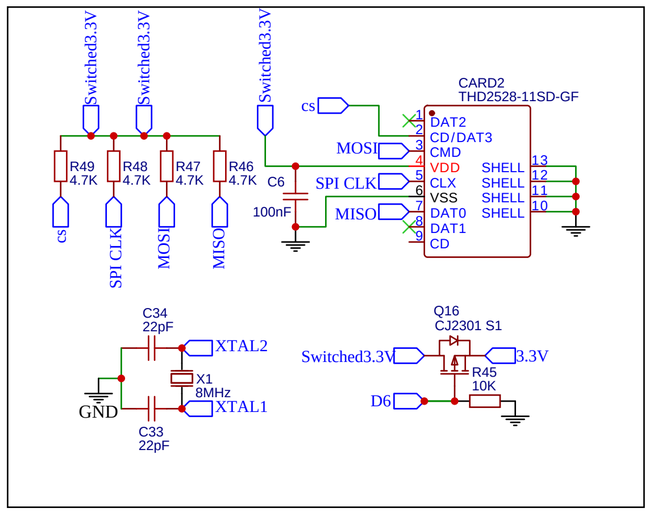

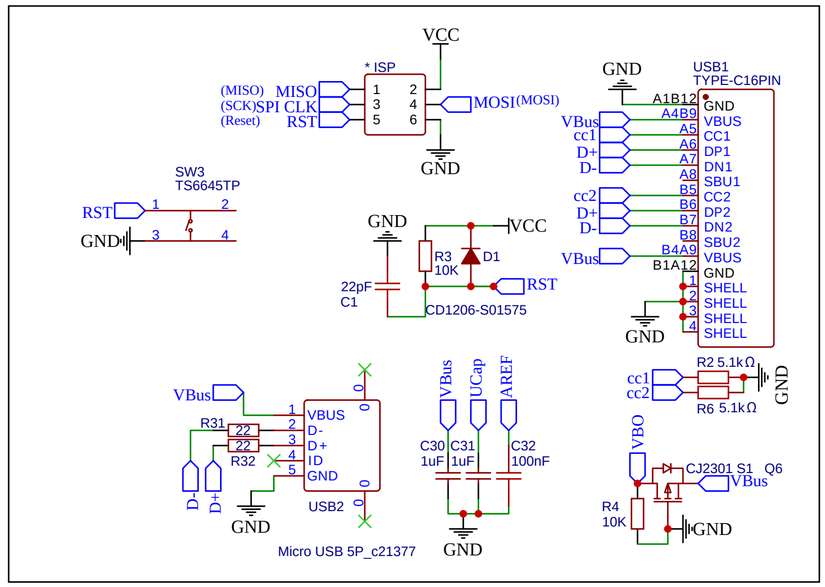

TITLE: SEMA-PCB-2025		REV: 1.0
EasyEDA	Company: Sunbird AI	Sheet: 1/1
	Date: 2025-01-26 Drawn By: Tiba	