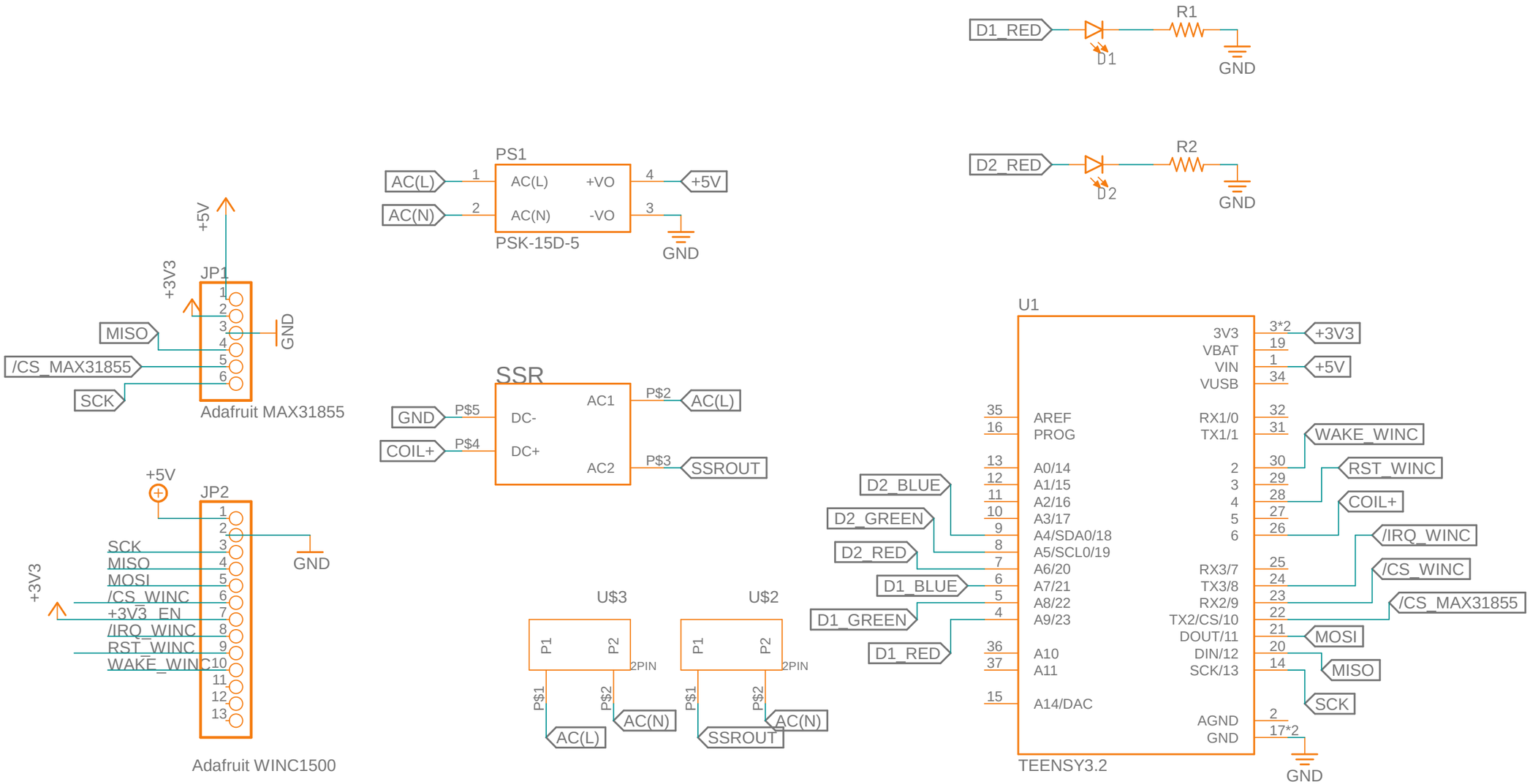

DRAWING_NAME

8/2/2023 8:21 PM

Sheet: 1/1