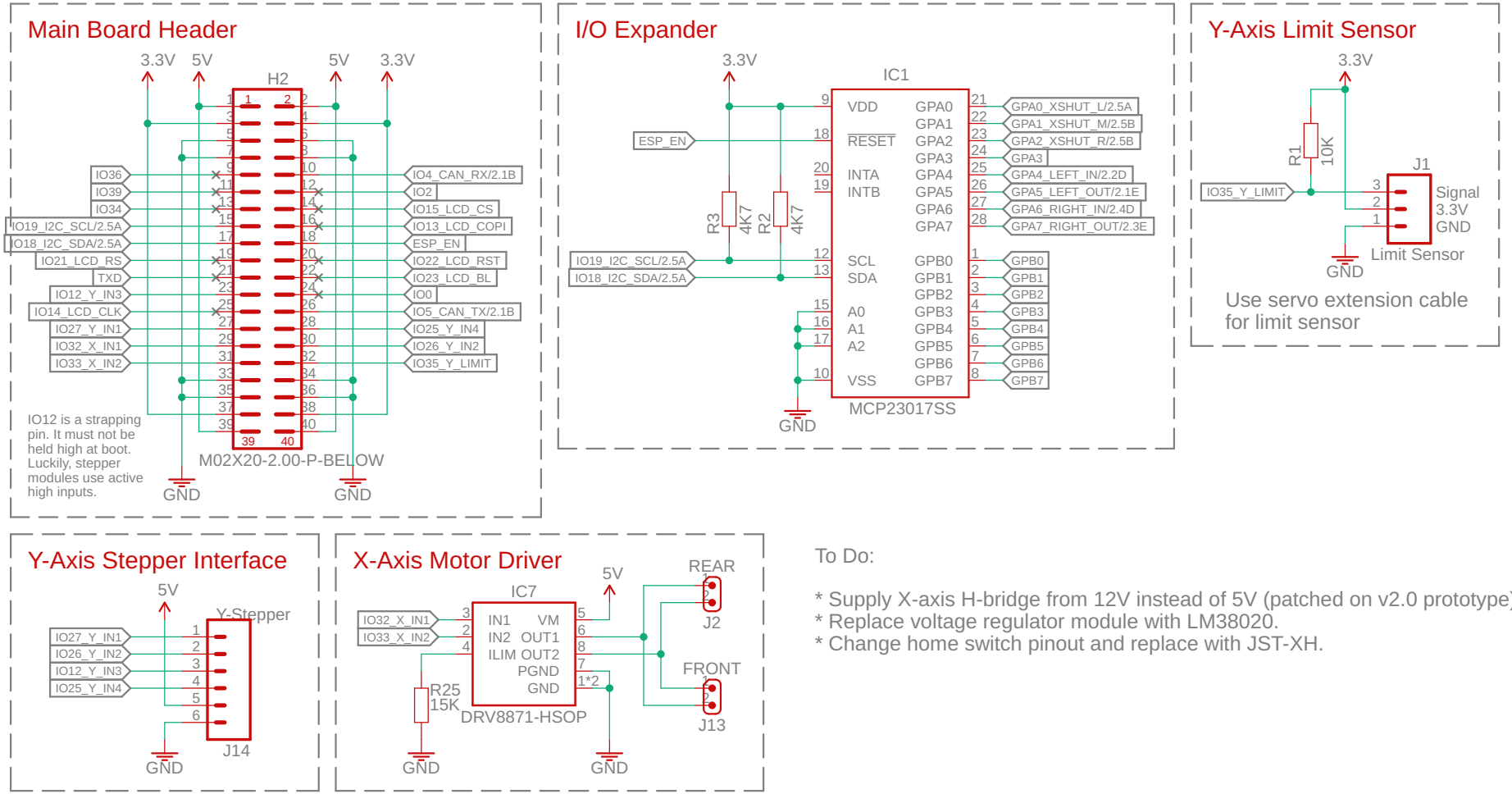


To Do:

* Supply X-axis H-bridge from 12V instead of 5V (patched on v2.0 prototype)
* Replace voltage regulator module with LM38020.
* Change home switch pinout and replace with JST-XH.

# WT32-SC01 Conveyor Controller

| SKU: CONVEYOR | V2.0 (2023-12-28) | www.superhouse.tv/conveyor |
|---|---|---|

(C)2022-2023 SuperHouse Automation: www.superhouse.tv
Licensed under the TAPR Open Hardware License: www.tapr.org/ohl

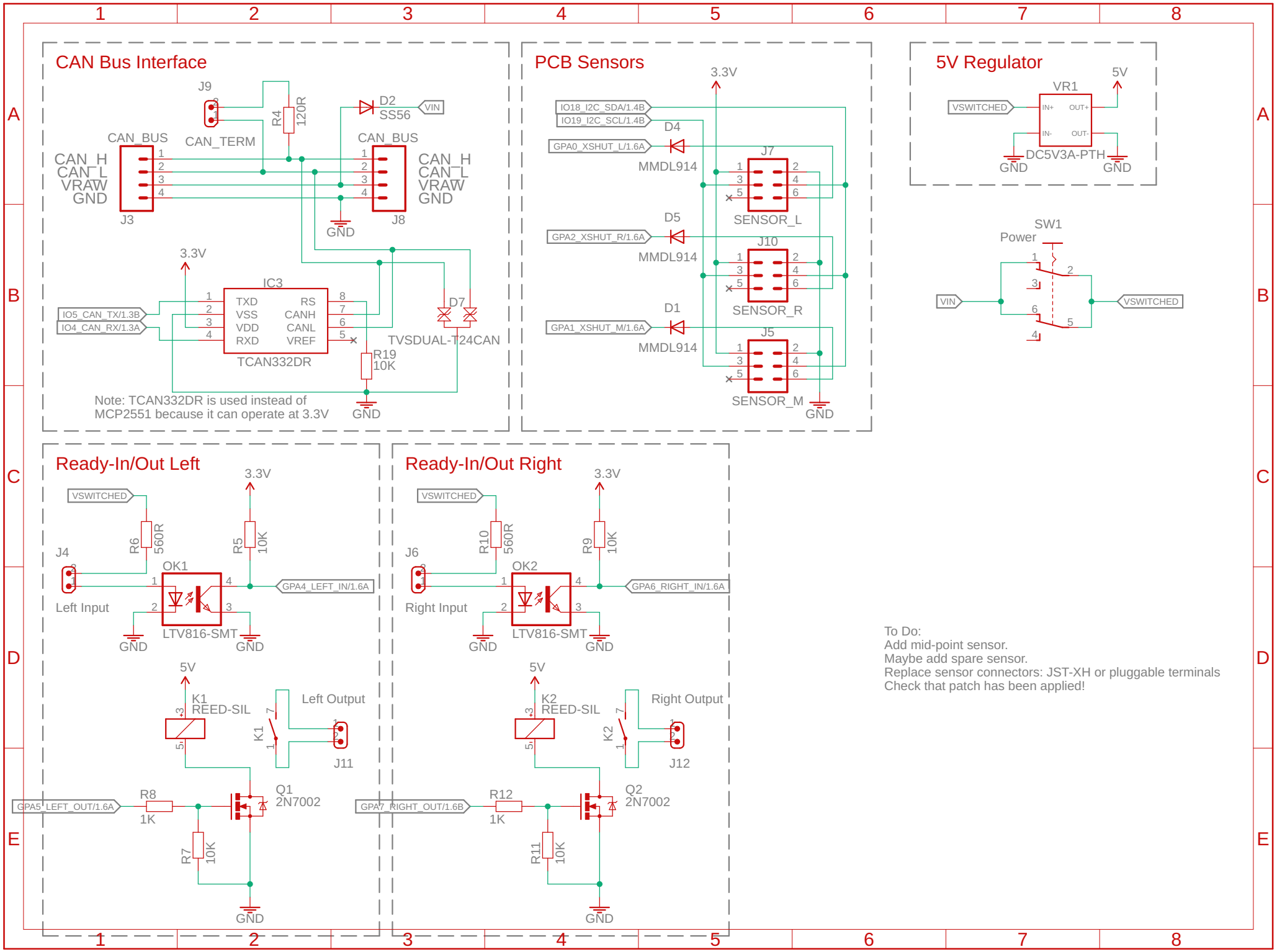
CAN Bus Interface
J9
CAN_TERM
R4
120R
D2
SS56
VIN
CAN_BUS
CAN_H
CAN_L
VRAW
GND
J3
J8
3.3V
IC3
TXD
VSS
VDD
RXD
RS
CANH
CANL
VREF
TCAN332DR
IO5_CAN_TX/1.3B
IO4_CAN_RX/1.3A
D7
TVSDUAL-T24CAN
R19
10K
Note: TCAN332DR is used instead of
MCP2551 because it can operate at 3.3V
PCB Sensors
IO18_I2C_SDA/1.4B
IO19_I2C_SCL/1.4B
GPA0_XSHUT_L/1.6A
GPA2_XSHUT_R/1.6A
GPA1_XSHUT_M/1.6A
D4
D5
D1
MMDL914
J7
J10
J5
SENSOR_L
SENSOR_R
SENSOR_M
5V Regulator
VR1
5V
VSWITCHED
IN+
OUT+
IN-
OUT-
DC5V3A-PTH
SW1
Power
Ready-In/Out Left
J4
R6
560R
R5
10K
OK1
GPA4_LEFT_IN/1.6A
Left Input
LTV816-SMT
K1
REED-SIL
Left Output
J11
R8
1K
Q1
2N7002
GPA5_LEFT_OUT/1.6A
R7
10K
Ready-In/Out Right
J6
R10
560R
R9
10K
OK2
GPA6_RIGHT_IN/1.6A
Right Input
K2
Right Output
J12
GPA7_RIGHT_OUT/1.6B
R12
R11
To Do:
Add mid-point sensor.
Maybe add spare sensor.
Replace sensor connectors: JST-XH or pluggable terminals
Check that patch has been applied!