Analysis of Robotic Workspace Based on Monte Carlo Method and the Posture Matrix

Jia Li, Fei Zhao, Xingchen Li, Junjie Li
School of Mechanical Engineering and Automation
Northeastern University
Shenyang, China
e-mail: jiali@mail.neu.edu.cn; Feizhao@mail.neu.edu.cn; lxc1030846481@163.com; 892791211@qq.com

***Abstract*—With the development of industrial automation, the application of intelligent robots has been widespread increasingly, but it is difficult to accurately describe robotic workspace. Currently workspace analysis methods include analytic method, graphic and numerical methods, but these common methods have many shortages. This paper presents a method of robotic workspace solution, which combines the theory of Monte Carlo method with posture transformation matrix, Monte Carlo method is used to sample by complying uniform distribution for determining each robot joint motion variables. These joint motion variables that are obtained by sampling are applied for terminal posture transformation matrix to get the posture workspace points, which constitute workspace, and MATLAB platform is applied to draw three-dimensional workspace and plane projection map, with the benefits of intuitive, fast, comprehensive, which provides a new way for the evaluation and design of robotic workspace.**

Keywords-Robot; workspace; D-H coordinate system; posture coordinate transformation matrix; Monte Carlo method

I. INTRODUCTION

The size of the workspace of the robot represents the motion range of robot, which is an important criteria of evaluating robot working ability. Besides, the work space is also one of the index of evaluating robot mechanism design rationality [1,2]. .

The robotic space calculation of open-chain multiple degrees freedom robot is very complicated, there are three methods: analytic method, graphic and numerical methods. Analytic method is used to solve analytical relationship between robot working space and structural parameters by algebraic equations, though there is a more precise description of the work space, but the results showing of analytical method is not intuitive. The application is limited because it involves complex mathematical calculations which is difficulty to solve. Graphic methods apply graphic plotting ways to solve the geometrical workspace of robot. Although graphic method for solving the resultion of workspace is more intuitive, the mapping process becomes so complex that it is difficult to diagrams with the increase in the number of joint, mathematic calculations are so complex that it is difficult to solve, the work space solution is not comprehensive, and the result is unintuitive, etc. These methods are not suitable for the six DOF robot project . This paper presents a method of solving robot workspace that belongs to numerical method, it applying the combination Monte Carlo method with pose transformation matrix. Monte Carlo method is used to randomly sample each robot joint motion variables, then a series of joint sampling variables values are took into terminal posture matrix and a series of terminal posture are got, MATLAB is applied to plot three-dimensional and two-dimensional workspace map, with the benefits of intuitive, fast, comprehensive, which provides a new way for the evaluation and design of robotic workspace.

Robot workspace solving steps based on Monte Carlo method of this paper include: (1) Analyzing the relationship of robots structure and movement; (2) Determining parameters of the component size, position and angle range; (3) Establishing D-H coordinate system; (4) Establishing posture matrix between two levers; (5) Establishing the terminal posture coordinate transformation matrix; (6) Determining Monte Carlo sampling method; (7) Determining its workspace point based on terminal posture coordinate transformation matrix and Monte Carlo simulation sample values; (8) Simulating and determining the working space points to draw the working space map.

II. ESTABLISHMENT OF ROBOT TERMINAL POSYURE MODEL

Currently the most widely used robots are six DOF robot illustrated in Figure 1, which are used as an application example to illustrate the proposed workspace solving method based on Monte Carlo theory. Solving the workspace of the robot must carry out mathematical modeling of terminal posture, namely it is to solve the posture coordinate transformation of robot each joint with respect to its terminus to complete the solving of terminal posture and determine its workspace.

A. Establishment of D-H CoordinatesSystem

According to D-H theory, the kinematics positive solution of serial robot is used to set up each link coordinate system of robot (showed in Figure 1), which is showed in Figure 2. The coordinate system $O_0x_oy_0z_0$ is located on the robot base. O_0x_o represents the front of the robot arm. O_0y_0 represents the transverse direction of the robot. O_0z_0 represents the direction of the robot's height. The O_1x_1 axis locates in the horizontal plane. O_2x_2 axis is along the axis

978-1-5090-0832-2/16/$31.00 ©2016 IEEE

direction of the large arm. The O_3x_3 axis is perpendicular to the axis of the small arms. O_3x_3, O_4x_4 and O_5x_5 are parallel. Coordinate origin point O_4 coincides with O_5. $O_6x_6y_6z_6$ is the terminal coordinate system, which the length of the tool d_6 is considered. D-H parameters are listed in Table 1. There are two parameters to describe a lever, namely the normal distance a_i and the two axis included angle α_i which are perpendicular to a_i planes of. Two other parameters are used to represent the relationship between two levers, namely the normal line distance d_i of two levers and the included angle θ_i between two levers normal line, and i represents the number of lever[3].

TABLE I. D-H PARAMETERS

lever	θ_i	d_i	a_i	α_i
i=1	θ_1	d_1	a_1	90°
i=2	θ_2	0	a_2	0
i=3	θ_3	0	a_3	90°
i=4	θ_4	d_4	0	-90°
i=5	θ_5	0	0	90°
i=6	θ_6	d_6	0	0

B. *Establishment of Posture Matrix Between Two Levers*

The homogeneous coordinate transformation of a link with respect to the previous link is called the T_i matrix, namely T_i is the homogeneous coordinate transformation matrix of the i-th lever with respect to the (i-1)-th lever. As shown in Figure 2, the coordinate transformation of the robot component i with respect to the component i-1 is expressed as(1).

$$T_i = \mathrm{Rot}(z,\theta_i)\mathrm{Trans}(0,0,d_i)\mathrm{Trans}(a_i,0,0)\mathrm{Rot}(x,\alpha_i)$$

$$T_i = \begin{bmatrix} \cos\theta_i & -\sin\theta_i\cos\alpha_i & \sin\theta_i\sin\alpha_i & a_i\cos\theta_i \\ \sin\theta_i & \cos\theta_i\cos\alpha_i & -\cos\theta_i\sin\alpha_i & a_i\sin\theta_i \\ 0 & \sin\alpha_i & \cos\alpha_i & d_i \\ 0 & 0 & 0 & 1 \end{bmatrix}$$

According to the D-H parameters of Figure2 and Table1 and the homogeneous transformation matrix (1), the transformation matrix T_i of each link can be obtained.

$$T_1 = \begin{bmatrix} \cos\theta_1 & 0 & \sin\theta_1 & a_1\cos\theta_1 \\ \sin\theta_1 & 0 & -\cos\theta_1 & a_1\sin\theta_1 \\ 0 & 1 & 0 & d_1 \\ 0 & 0 & 0 & 1 \end{bmatrix}$$

$$T_2 = \begin{bmatrix} \cos\theta_2 & -\sin\theta_2 & 0 & a_2\cos\theta_2 \\ \sin\theta_2 & \cos\theta_2 & 0 & a_2\sin\theta_2 \\ 0 & 0 & 1 & 0 \\ 0 & 0 & 0 & 1 \end{bmatrix}$$

$$T_3 = \begin{bmatrix} \cos\theta_3 & 0 & \sin\theta_3 & a_3\cos\theta_3 \\ \sin\theta_3 & 0 & -\cos\theta_3 & a_3\sin\theta_3 \\ 0 & 1 & 0 & 0 \\ 0 & 0 & 0 & 1 \end{bmatrix}$$

$$T_4 = \begin{bmatrix} \cos\theta_4 & 0 & -\sin\theta_4 & 0 \\ \sin\theta_4 & 0 & \cos\theta_4 & 0 \\ 0 & -1 & 0 & d_4 \\ 0 & 0 & 0 & 1 \end{bmatrix}$$

$$T_5 = \begin{bmatrix} \cos\theta_5 & 0 & \sin\theta_5 & 0 \\ \sin\theta_5 & 0 & -\cos\theta_5 & 0 \\ 0 & 1 & 0 & 0 \\ 0 & 0 & 0 & 1 \end{bmatrix}$$

$$T_6 = \begin{bmatrix} \cos\theta_6 & -\sin\theta_6 & 0 & 0 \\ \sin\theta_6 & \cos\theta_6 & 0 & 0 \\ 0 & 0 & 1 & d_6 \\ 0 & 0 & 0 & 1 \end{bmatrix} \tag{2}$$

C. *Establishment of the Posture Coordinate Transformation Matrix*

After the establishment of the transformation matrix of each link, the homogeneous coordinate transformation of the end of the robot hand with respect to the base coordinate system is T_{60}.

$$T_{60} = T_1T_2T_3T_4T_5T_6 = \begin{bmatrix} n_x & o_x & a_x & p_x \\ n_y & o_y & a_y & p_y \\ n_z & o_z & a_z & p_z \\ 0 & 0 & 0 & 1 \end{bmatrix} \tag{3}$$

Each parameter of the homogeneous coordinate transformation T_{60} is calculated by the matrix (3), .

where:

$$n_x = c\theta_1 c\theta_{23}(c\theta_4 c\theta_5 c\theta_6 - s\theta_4 s\theta_6) + s\theta_1(s\theta_4 c\theta_5 c\theta_6 + c\theta_4 s\theta_6) - c\theta_1 s\theta_{23} s\theta_5 c\theta_6$$

$$n_y = s\theta_1 c\theta_{23}(c\theta_4 c\theta_5 c\theta_6 - s\theta_4 s\theta_6) - c\theta_1 (s\theta_4 c\theta_5 c\theta_6 + c\theta_4 s\theta_6) - s\theta_1 s\theta_{23} s\theta_5 c\theta_6$$

$$n_z = s\theta_{23}(c\theta_4 c\theta_5 c\theta_6 - s\theta_4 s\theta_6) + c\theta_{23} s\theta_5 c\theta_6$$

$$o_x = -c\theta_1 c\theta_{23}(c\theta_4 c\theta_5 s\theta_6 + s\theta_4 c\theta_6) - s\theta_1$$
$$(s\theta_4 c\theta_5 s\theta_6 - c\theta_4 c\theta_6) + c\theta_1 s\theta_{23} s\theta_5 s\theta_6$$
$$o_y = -s\theta_1 c\theta_{23}(c\theta_4 c\theta_5 s\theta_6 + s\theta_4 c\theta_6) + c\theta_1$$
$$(s\theta_4 c\theta_5 s\theta_6 - c\theta_4 c\theta_6) + s\theta_1 s\theta_{23} s\theta_5 s\theta_6$$
$$o_z = -s\theta_{23}(c\theta_4 c\theta_5 s\theta_6 + s\theta_4 c\theta_6) - c\theta_{23} s\theta_5 s\theta_6$$
$$a_x = c\theta_1(c\theta_{23} c\theta_4 s\theta_5 + s\theta_{23} c\theta_5) + s\theta_1 s\theta_4 s\theta_5$$
$$a_y = s\theta_1(c\theta_{23} c\theta_4 s\theta_5 + s\theta_{23} c\theta_5) - c\theta_1 s\theta_4 s\theta_5$$
$$a_z = s\theta_{23} c\theta_4 s\theta_5 - c\theta_{23} c\theta_5$$
$$P_x = c\theta_1 c\theta_{23} c\theta_4 s\theta_5 d_6 + s\theta_1 s\theta_4 s\theta_5 d_6 + c\theta_1 s\theta_{23}$$
$$(c\theta_5 d_6 + d_4) + c\theta_1 c\theta_{23} a_3 + c\theta_1 c\theta_2 a_2 + c\theta_1 a_1$$
$$P_y = s\theta_1 c\theta_{23} c\theta_4 s\theta_5 d_6 - c\theta_1 s\theta_4 s\theta_5 d_6 + s\theta_1 s\theta_{23}$$
$$(c\theta_5 d_6 + d_4) + s\theta_1 c\theta_{23} a_3 + s\theta_1 c\theta_2 a_2 + s\theta_1 a_1$$
$$P_z = s\theta_{23}(c\theta_4 s\theta_5 d_6 + a_3) - c\theta_{23}$$
$$(c\theta_5 d_6 + d_4) + s\theta_2 a_2 + d_1$$

Where:

$\mathrm{c}\theta_i = \cos\theta_i$; $\mathrm{s}\theta_i = \sin\theta_i$;

$\mathrm{c}\theta_{ij} = \cos(\theta_i + \theta_j)$; $\mathrm{s}\theta_{ij} = \sin(\theta_i + \theta_j)$

Each parameter value of Table 1 are took into (3) to solve the terminal posture of the manipulator. The terminal posture is the space position and attitude of robot terminal arm in its base coordinate system $O_0 x_o y_0 z_0$, which is a workspace point of robot.

III. Determination of Monte Carlo Sampling and Workspace

A. *Determination of Monte Carlo Sampling and Simulation of Workspace* Point *Acronyms*

The thought of Monte Carlo method for solving robot workspace is as fellow. The joint variables of the robot are randomly combined in a given range. In order to ensure that the sampling value can fully simulate the random combination, each of the joint variable value shall comply uniform distribution. Monte Carlo sampling method is used to produce pseudo-random number between 0 and 1 (0, 1) which comply uniform distribution, and each sampling can generate a set of variable value of each joint [4,5]. Each joint variable value of robot is generated by sampling pseudo-random number according to the (4).

$$\theta_i^k = \theta_{i\min} + (\theta_{i\max} - \theta_{i\min}) rand \quad (4)$$

i=1,2,3, …,n k=1,2,3,4,…,m

Where:

θ_i^k : the k-th sample values obtained by Monte Carlo sampling for the i-th joint motion variables;

$\theta_{i\max}$、$\theta_{i\min}$: Maximum and minimum value of the i-th movement variable;

rand: pseudo-random number belong to (0,1) which comply uniform distribution;

Matlab platform is applied to program the above process into a software interface to solve the workspace according to the structure parameter and the range of motion variables of robot[6].

TABLE II. D-H PARAMETERS

Lever	θ_i	d_i	a_i	α_i
i=1	-160—160	420	150	90°
i=2	-100—35	0	575	0
i=3	-45—0	0	130	90°
i=4	-100—110	645	0	-90°
i=5	80—200	0	0	90°
i=6	-266—266	150	0	0

Take robot modeling parameters of Figure 1 for example, the structural parameters and motion variables are shown in Table 2.

B. *Simulation of Determining the Workspace*

A set of Monte Carlo method of the variable value of each joint of the robot, which is generated by the Monte Carlo method sampling, is brought into the (3) to obtain the workspace point in the condition of the variable value of each joint of the robot. The sampling times of Monte Carlo method is more than 1,000 times generally.

For each sample, a set of joint variable value of the robot is obtained by Monte Carlo method, a simulated robot workspace points is got, workspace point will be collected based on meeting the requirement of sampling number, and then robot work space is drew as shown in Figure 3-6. The sampling times is 3000 to draw workspace map, including three-dimensional and the plane projection. The simulation results show that the proposed method can intuitively and comprehensively determine the robot workspace based on Monte Carlo simulation.

IV. Conclution

An important performance criteria of robot for design and evaluation is robot workspace, and current methods include analytic , graphic and numerical methods. These methods have some problems, such as it is difficult to solve complex mathematical calculations and workspace incomprehensive. This paper presents a kind of robotic space solution method, it combines the Monte Carlo theory with posture transformation matrix, apply Monte Carlo method for sampling according to uniform distribution to determine each robot joint motion variables. A series of joint motion variables obtained by sampling is took into terminal posture transformation matrix to obtain thousands of posture workspace points and collect them into workspace, and the concrete steps and models are given. Take six DOF robot for example, applying MATLAB platform to simulate and show three-dimensional and plane projection of robotic workspace map, and the feasibility and effectiveness of the proposed method are verified with the benefits of intuitive, fast,

comprehensive, which provides a new way for the evaluation and design of robotic workspace.

ACKNOWLEDGMENT

This research is subsidized by National Key Technology Research and Development Program of China (Grant No.2014BAF08B01) and The Collaborative Innovation Center of Major Machine Manufacturing in Liaoning.

REFERENCES

[1] Chang Jun, Nan Wen-hu, and Li Yu-ming. "The DELTA Robot Workspace Analysis Based on Monte Carlo Method,". Mechanical Engineer,, 2012, Sep, pp14-15

[2] Guo Benyin, Liu Yu, and Miao Liang,. "Workspace Analysis of Micro Parallel Robot with Six-DOF,". Journal of Changchun University of Science and Technology, 2015, Apr, pp1-5

[3] Shi Zechang, Liu Shenhou. Mechanism Precision .Beijing , China,Higher Education Press,2015

[4] Huang Kezhong, Mao Shanpei. Application of random method and fuzzy mathematics . Shanghai,China,Tongji University press, 1985

[5] Dolby, Hu Wei. Monte Carlo method application in system engineering . Xian,China,Xi'an Jiao Tong University press, 2007

[6] Liu Weiguo. Scientific computing and Matlab language. Beijing, China RailwayPress, 2004

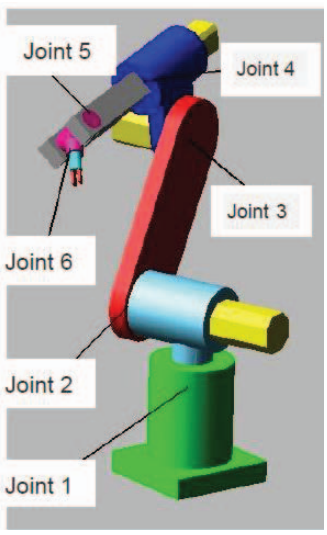

Figture 1. Six degrees freedom robot model

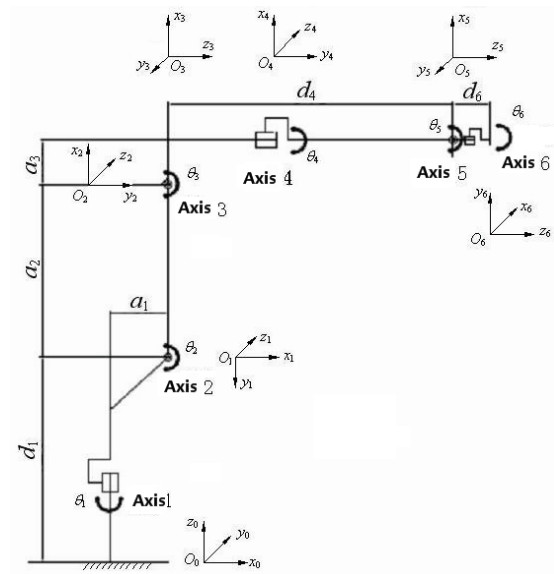

Figure 2 D-H coordinate

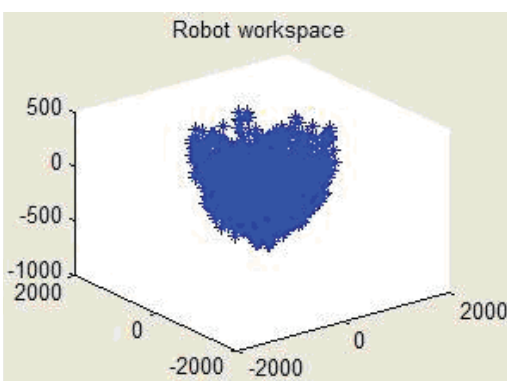

Figure 3 Three dimensional display of working space

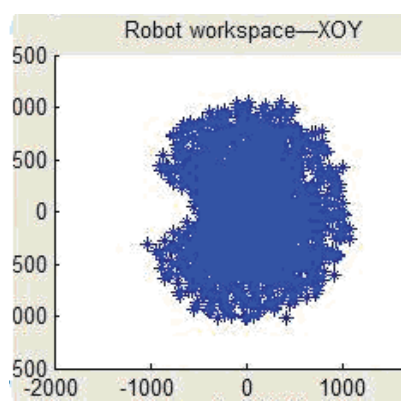

Figure 4 XY plane projection

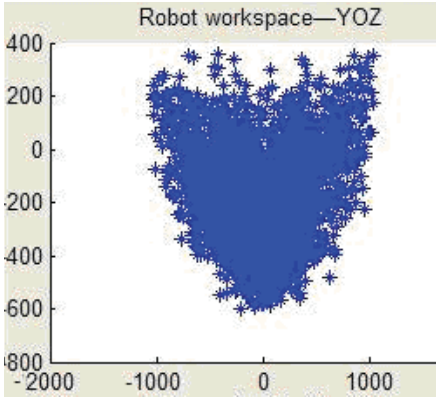

Figure 5 YZ plane projection

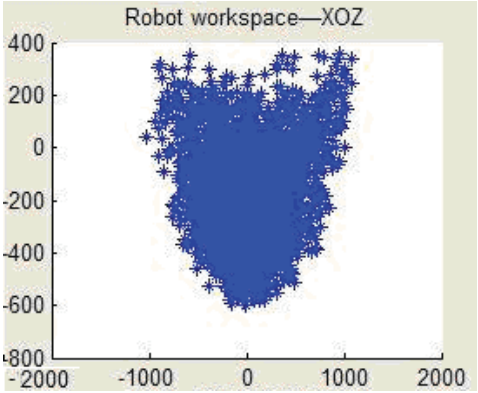

Figure 6 XZ plane projection