UNIVERSITY OF SANTO TOMAS
Faculty of Engineering
ELECTRONICS ENGINEERING DEPARTMENT
Second Term, AY 2024 – 2025

ECE 2119: Electronic Devices and Circuits

Design of a _4.3V_ - Volt Full Wave Bridge-Type Power Supply

ANGOSTORA, Tristan Zeth V.

ARBOSO, Adrian Jomer V.

BARRETTO, Aron Caleb R.

BON-AO, Angelo B.

Group No. 1

2ECE-D

Assoc. Prof. Joycelyn P. Poblete, M.Eng., PECE

ECE 2119 Coordinator

May 26, 2025

Abstract — **This paper presents the design, analysis, and simulation of a full-bridge type power supply capable of delivering a regulated output voltage of 4.3 V with a maximum output power of 400 mW. Full-bridge rectifiers are widely used in power electronics due to their ability to efficiently convert AC input into a continuous DC output with improved utilization of the transformer winding. The proposed design incorporates a step-down transformer to reduce the input AC voltage to a manageable level, followed by a full-wave bridge rectifier to convert it into pulsating DC. A capacitive filtering stage is used to smooth out the ripples, and a voltage regulation stage ensures that the output voltage remains stable at 4.3 V under varying load conditions.**

The design process involves careful selection of component values based on theoretical calculations and power requirements. Simulation and performance validation were carried out using LTSpice. Results indicate that the circuit successfully achieved an average output voltage of 4.23 V and an output power of 392.03 mW, corresponding to percentage errors of 1.6729% and 1.9925%, respectively. The power supply also demonstrated excellent voltage stability, achieving a voltage regulation of just 0.0083%, and maintained a ripple voltage below 1% of the output. These results confirm the circuit's efficiency, accuracy, and reliability, making it suitable for low-power applications such as embedded systems, sensors, and portable electronic devices.

I. INTRODUCTION

A power supply **(ACT, 2022)** is a fundamental component that converts the power from the source into the proper voltage and current values. Due to the different options, a specific power supply function really depends on whether it needs to convert the power or regulate the energy. Using a full-wave power supply (***Half Wave and Full Wave Rectifier: Function, Comparison, and Applications | Electronics Basics | ROHM*, 2023)**, it operates by the use of half waves of an AC cycle, which can deliver a higher average DC output voltage and a reduced ripple waveform, making it very suitable for numerous applications requiring a stable power.

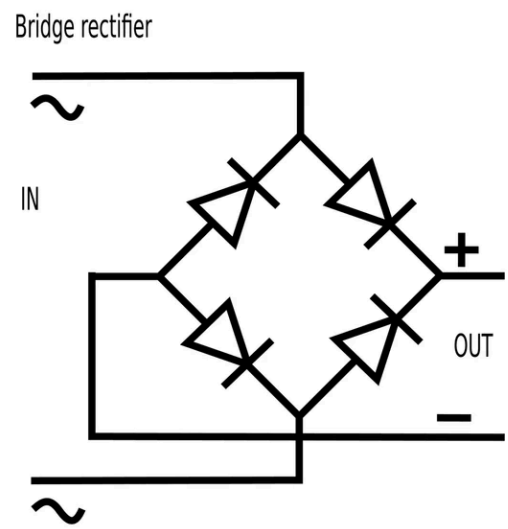

Figure 1.1 - A bridge-type full-wave rectifier

To create a bridge-type full-wave power supply, there are specific components that are used in order to have a functional power supply:

- **Transformer**

This component serves to adjust the voltage level of AC to match a suitable level of voltage required for the circuit, either stepping it up or down. It also provides electric isolation between the high-voltage input and a low-voltage output, giving safety for the components and the researchers. After supplying the AC voltage, the bridge rectifier will convert it into pulsating DC.

- **Diodes (RR601BGE4S)**

These diodes will be arranged in a bridge configuration of the bridge rectifier and will be responsible for converting the AC voltage from the transformer to a pulsating DC voltage. It consists of four diodes wherein the positive and negative halves of the AC cycle, the current flows in the same direction. In the positive half-cycle, two of the diodes will conduct and direct the current through the output, and also during the negative half-cycle. This improves efficiency in providing a smoother output and a continuous pulsating DC voltage.

- **Resistors**

As simple as it is, the job of the resistor is to regulate the current flow in a circuit. The load resistor represents the circuit that consumes the DC voltage output, determines the required output voltage. Another resistor is placed across the capacitor to safely discharge after power-off, enhancing safety.

- **Zener Diode**

This is commonly used to provide voltage regulation after filtering and rectification. It also maintains a constant voltage by conducting once the output exceeds the specific breakdown voltage, clamping the voltage to a stable, predetermined level.

- **Bypass- Capacitor**

This filters the pulsating DC output from the rectifier and converts it into a smoother and more stable DC voltage. It charges during voltage peaks and discharges during dips, effectively reducing voltage ripple. This process improves the quality of the DC supply, making it suitable for powering electronic devices requiring a steady voltage.

In the industry, a bridge-type full-wave power supply is used to efficiently convert AC mains power into a stable DC voltage, which is essential for operating a wide range of electronic and control systems. It is commonly found in automation systems, control panels, instrumentation, communication devices, and motor drives. By using both halves of the AC cycle, it delivers a smoother and more continuous DC output compared to half-wave rectifiers, improving reliability and performance. Its efficient design and widespread applicability make it a fundamental component in industrial electrical and electronic systems.

II. CIRCUIT OPERATION

The project is a power supply design utilizing a transformer, full-wave bridge rectifier, bypass capacitor filter, and zener diode voltage regulator (reverse zener diode). The power supply converts an input AC voltage of 220 VRMS (common outlet AC voltage) to an output DC voltage of 4.3 V with a power dissipation of 400mW of a certain load resistance. In discussing the workings of the power supply, we divide it into four processes, namely: ***(1)*** *Voltage Transformation,* ***(2)*** *Full-wave Bridge Rectification,* ***(3)*** *Voltage Filtration, and* ***(4)*** *Voltage Regulation*.

(1) Voltage Transformation

Voltage from transmission lines are high AC voltages. Therefore, it needs to be stepped down to be rectified efficiently. Two inductors with a ratio of turns between them are found inside a transformer. These determine the voltage ratio in the primary winding to that in the

secondary winding. Therefore, in order to step down an AC voltage, the primary winding turns must be larger than the secondary, employing a turn ratio.

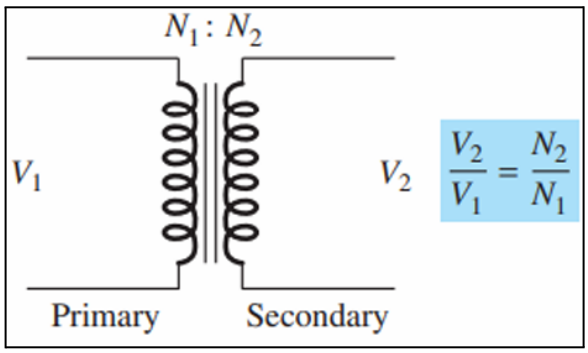

Figure 2.1.1 Schematic Symbol of a Transformer

It entails that the voltage passes from a higher-to-lower impedance, lowering the peak voltage as shown in **Figure 2.1.2**.

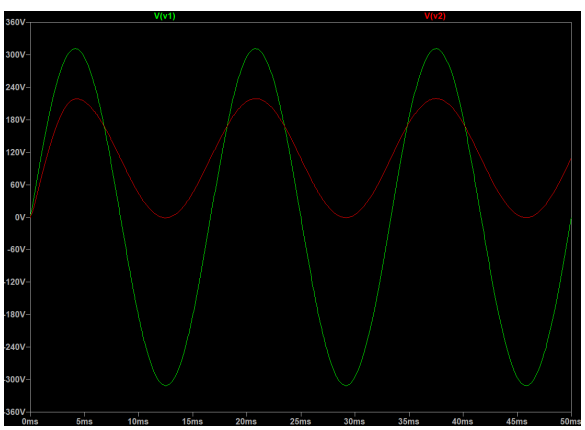

Figure 2.1.2 Voltage waveform of the primary and secondary windings

(2) Full-wave Bridge Rectifier

The full-wave bridge rectifier creates a periodic wave that doubles in frequency (120 Hz) by using four diodes to extract positive and negative waves.

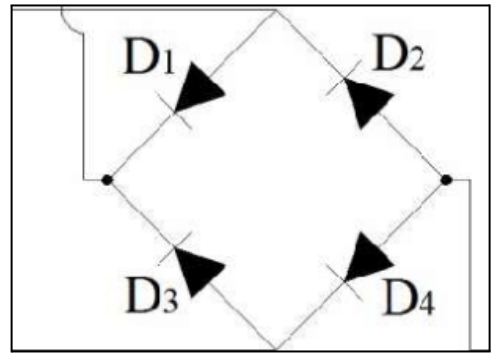

Figure 2.2.2 Full-wave Bridge Rectifier Schematic Symbol

Only cycles with their corresponding polarity are in forward bias, which makes this possible. This produces a fully rectified wave showing complete positive, initial positive, and negative cycles, as shown in **Figure 2.2.2**.

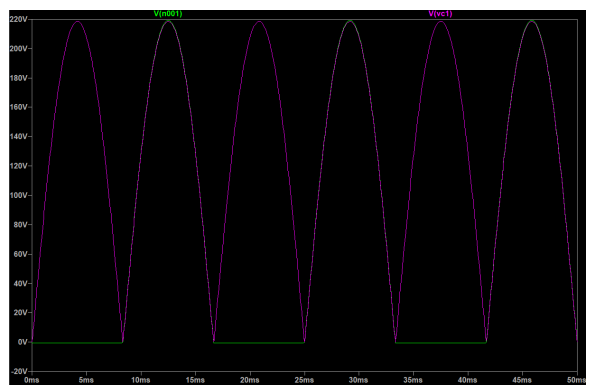

Figure 2.2.2 AC Voltage Before & After Rectifying

(3) Voltage Filtration

After the voltage waves have been fully rectified, they are filtered to add a DC voltage level. This is accomplished by using a capacitor's time constant for charging and discharging when connected in parallel. There must be no discernible lag between each charging and discharging cycle to show a DC voltage level at its peak, as shown in **Figure 2.3.1**. Despite the

flat appearance of the voltage waveform across the capacitor, a ripple voltage exists, which can only be seen when zoomed in.

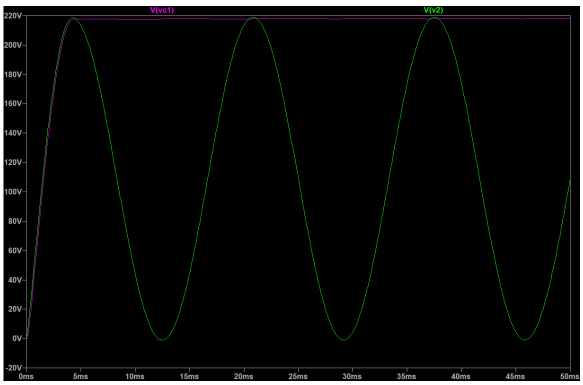

Figure 2.3.1 Voltage waveform of the bypass capacitor and secondary winding

(4) Voltage Regulation

A reverse zener diode voltage regulator is used to further refine the output voltage wave. This is to guarantee that, in spite of changes in current, the output voltage will always be at the breakdown voltage of the zener diode. A zener diode with the proper specifications can produce the best voltage output; therefore, it must be carefully chosen using the parameters listed in the data sheets supplied by the respective manufacturers. The chosen diode was decided to be 1N479A. The regulated output voltage can be seen in **Figure 2.4.1**.

Figure 2.4.1 Voltage waveform of the bypass capacitor and output

III. DESIGN CONSIDERATIONS

Transformer Design

1.) Type of Transformer

Selecting an appropriate transformer is essential to obtain a DC output voltage of 4.3V. A step-down transformer is preferred in this case, as it reduces higher AC mains voltage to a lower, safer level suitable for low-voltage electronic circuits. While step-up transformers are useful for transmitting power over long distances, a step-down transformer better suits the goal of delivering a regulated 4.3V DC output, which is why it was chosen for this design.

$$IE \qquad wd$$

$$V_{p} = \frac{2(110)}{\sqrt{2}} = 155.5635V$$

$$V_{M} = 155.5635V - 2(0.7) = 154.1635V$$

$$V_{AVE} = V_{DC} = \frac{(2)(154.1635)}{\pi} = 98.1435V$$

$$V_{RMS(OUT)} = 109.01005V$$

Equation 3.1.1 Values of V(out)

2.) Primary and Secondary Winding Turns Ratio

Another important factor to consider is the turns ratio between the primary and

secondary windings of the transformer. An excessively high turns ratio can result in a significant drop in input voltage, leading to inefficient energy transfer. Conversely, a very low turns ratio may produce an output voltage that is too high, potentially damaging downstream components like rectifier diodes. Therefore, an inductance ratio of 4:2 H is utilized, as shown in Equation 3.1.2, leading to a desired turns ratio of 2:1 to reduce the input voltage by half before rectification (Electronics Tutorials, 2023).

$$\frac{L_1}{L_2} = \left(\frac{V_1}{V_2}\right)^2$$

$$\frac{V_1}{V_2} = \frac{N_1}{N_2}$$

$$\frac{220}{V_2} = \frac{10}{8}$$

$$V_2 = 110$$

$$\frac{L_1}{L_2} = \left(\frac{220}{110}\right)^2$$

$$\frac{L_1}{L_2} = \frac{4}{2} = 2$$

Equation 3.1.2 Inductance Ratio

Rectifier Design

1. *PIV Diode Rating*

In the researcher's circuit, a full-wave bridge rectifier is used. Therefore, the key consideration for the rectifier is the selection of an appropriate diode. The chosen diode must have a Peak Inverse Voltage (PIV) rating high enough to handle the reverse voltage during operation, preventing diode breakdown. the researchers ultimately selected the **RR601BGE4S**, as it offers a significantly higher PIV rating and current-handling capability, making it more suitable for power rectification in this application.

2. Rectifier

In rectifier circuits, a filter capacitor is employed to smooth out the pulsating DC voltage, effectively converting it into a more stable DC level (Floyd, 2016). The selection of capacitance is critical for optimal filtering. A capacitor with a larger value will hold its charge for a longer duration, leading to a slower discharge. While this can result in a more stable DC output, an excessively large capacitance can also cause a slow rise time when the capacitor is charging, potentially affecting the circuit's transient response. Conversely, a capacitor with a smaller value discharges more rapidly. If the discharge occurs too quickly before the arrival of the subsequent rectified pulse, the output voltage will exhibit significant fluctuations, resembling an unfiltered AC waveform. Therefore, a precise capacitance value is necessary to minimize the output ripple voltage and achieve effective filtering (Floyd, 2016), Using Equation 3.2, a capacitor of 6800µF is the closest higher Capacitor.

$$V_{r(p-p)} = \frac{P_{out}}{2fC_1V_M} \rightarrow C_1 = \frac{P_{out}}{2fV_{r(p-p)}(}$$

$$f = 120hc\ for\ a\ Full - Wace\ rectifier\ (Floyd,\ 2016)$$

$$= \frac{400x10^{-3}}{2(120)(0.043)(\frac{4.3\pi}{2})} = 5.7384mF$$

Equation 3.2

Hence, we use 4700uF since it is commercially available to achieve a ripple voltage less than 1% of the output.

Regulator Design

1. Zener Diode

In choosing the correct Zener diode for the regulator, both the output voltage and output current must be considered. The output voltage of 4.3 V should align with the Zener voltage of the diode, but due to the lack where the LTSpice doesn't have the Parameters we are looking for the Diode we make a Diode with IBV 4.3V and 20mA and ensure stable voltage regulation. Additionally, the output current must fall within the appropriate range for the Zener diode to operate in its breakdown region. If the current through the Zener diode is too low, the device may exit its breakdown region, resulting in ineffective voltage regulation [4](Horowitz and Hill, 2015). Taking these criteria into account, the researchers selected the 1N749A Zener diode. This diode has a nominal Zener voltage of 4.3 V, with a specified Zener voltage range of 4.08 V to 4.52 V at a test current of 20 mA, making it suitable for maintaining the desired 4.3 V output (ON Semiconductor, 2015).

$$I_Z = 20mA$$

$$I_D = \frac{P_{Out}}{V_{Out}} = \frac{400mW}{4.3V} = 93.0233mA$$

$$I_{RS} = I_D + I_Z = 93.0233mA + 20mA = 113.0.233mA$$

$$V_{RS} = V_M - V_Z =$$

$$= 154.1635V - 4.3V = 2.4544V$$

$$R_S = \frac{V_{RS}}{I_{RS}} = \frac{149.8635V}{113.0233mA} = 1325.9522\Omega$$

Equation 3.3

Choose 1500Ω since it is the closest commercially available resistor

2.) Load Resistor (RL)

The load resistor (RL) is a critical parameter for ensuring output voltage stability by maintaining a consistent load. Given a target DC output voltage of 4.3 V and a maximum output power of 400 W, the load resistance can be calculated. The relationship between power, voltage, and resistance, expressed as $P = \frac{V^2}{R}$, allows for the determination of RL

$$R_L = \left(\frac{V_{out}^2}{P_{MAX}}\right) = \left(\frac{4.3V^2}{400mW}\right) = 46.225\Omega$$

Equation 3.4

Choose 43Ω and 3Ω since it is the closest commercially available resistor.

At last, when we are designing the power supply, the researchers carefully considered voltage regulation, a key factor that measures how much the DC output voltage varies under different load conditions. As illustrated in the **Type of Transformer**, the output voltage is at its highest when no load is connected. Conversely, the **Bypass Capacitor** demonstrates that the output voltage decreases as current is drawn by the load. Voltage regulation expresses this variation between no-load and full-load scenarios. To ensure reliable performance and stability, the voltage regulation must remain within a 2% error margin. As shown in Equation 3.5, the regulation in this design stays within that 2% limit, confirming the power supply's stable output and effective operation

Figure 3.1 : Voltage with Full-Load

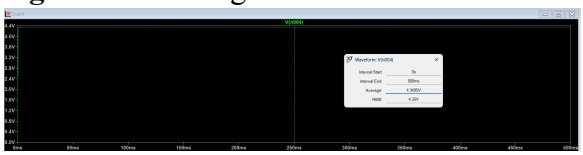

Figure 3.2: Voltage with No-Load

$$\%Voltage\ Regulation = \left|\frac{V_{NL} - V_{FL}}{V_{FL}}\right| x100$$

$$= \left|\frac{4.3495V - 4.3136V}{4.3136V}\right| x100 = 0.0083\%$$

Equation 3.5

Components	Values
C	4700μF
RS	1.5KΩ
RL	46Ω

Table 3.1: Passive Elements Values

IV. SIMULATION RESULTS AND ANALYSIS

The designed power supply was simulated through LTSpice as it accurately simulates different types of circuits, including actual power supplies. The designed FWB power supply met all criteria and expectations set by the instructor.

The required values of output DC voltage of 4.3V and maximum power output of 400mW within 2% were achieved. The ripple voltage was also considered, as it should be less than or equal to 1% to have an almost pure DC voltage output, which would also make the output characteristics more accurate.

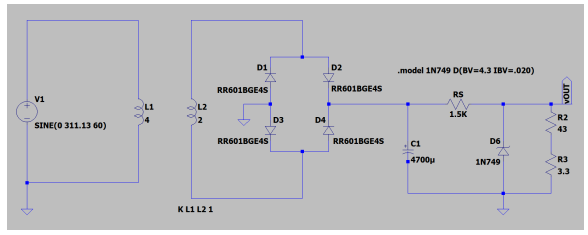

Figure 4.1 Circuit Diagram

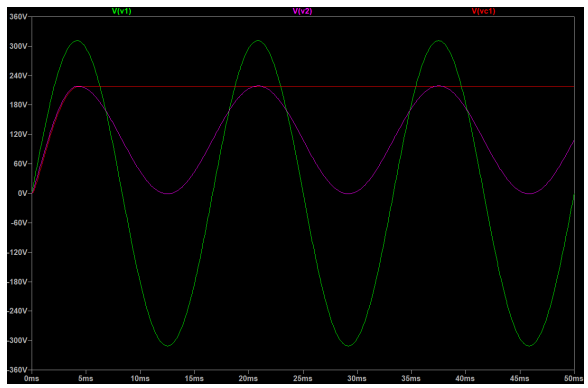

Figure 4.2 Voltage Waveform of the Primary Winding, Secondary Winding, and across the Bypass Capacitor

Running a transient analysis for 50ms, the observed voltage waveforms of the input and rectified output are shown in **Figure 4.2**. The voltage drops after it passes through the step-down transformer from an RMS value of 219.98V to an average of 105.25V The value of the secondary voltage was also obtained from the turns ratio of 2:,1 which is deemed to be closely accurate as it is confirmed by the simulator. The bypass capacitor also stores the voltage of 212.89V RMS.

Figure 4.3 Waveform of the Output Voltage

Figure 4.4 Waveform of the Output Power

The simulation results of the average DC output voltage is 4.23V, as seen in **Figure 4.3**, with a percent error of **1.63%** as shown in equation 4.1. In **Figure 4.4**, the simulation results at an average output power of **392.03 mW** with a percent error of **1.9925%** as also shown in equation 4.1.

$$\%Error\ Voltage = \left|\frac{TV-AV}{TV}\right| \times 100$$

$$= \left|\frac{4.3V - 4.23V}{4.3V}\right| \times 100 = 1.6279\%$$

$$\%Error\ Power = \left|\frac{TV - AV}{TV}\right| \times 100$$

$$= \left|\frac{400mW - 392.03mW}{400mW}\right| \times 100 = 1.9925\%$$

Equation 4.1

Output Parameter	**Simulation Result**	**Required Output**	**Percentage Error**
Output Voltage	4.23V	4.3V	1.6729%
Output Power	392.03mW	400mW	1.9925%

Table 4.1 Summary of Percent Error Values

This type of power supply's main function is to convert AC input voltages into pure DC outputs while estimating how efficiently delivering actual power would be. According to the specifications for this supply circuit, the derived ripple factor in this study would be less than 1% when the ripple voltage value is taken into consideration using Equation 3.2.

V. CONCLUSION

The power supply circuit developed in this project achieved its design goals by delivering a stable DC output voltage of 4.3V with a power dissipation of 400mW, using a 1N749A Zener diode for voltage regulation. Through simulation, the output voltage showed a percentage error of 1.6729%, and the output power recorded a percentage error of 1.9925%, both within the acceptable margin of error.

Moreover, the voltage regulation was calculated to be 0.0083%, demonstrating the circuit's exceptional ability to maintain voltage stability under varying load conditions. The low ripple and consistent performance across simulation

tests confirm that the circuit is well-suited for applications requiring a low-voltage regulated DC output.

Given its accuracy, efficiency, and use of commercially available components, this design presents a reliable and practical solution for converting 220V AC to a regulated 4.3V DC, making it applicable in low-power electronics such as embedded systems and sensor networks.

VI. TASK DISTRIBUTION

Members	**Parts Contributes**
Angostora, Tristan Zeth	Design Consideration Circuit Model Design Diode Model
Arboso, Adrian	Design Consideration Conclusion Abstract
Barretto, Aron Caleb	Abstract Introduction Apendices
Bon-ao, Angelo B.	Circuit Operation Simulation and Data Analysis

[1] ACT. (2022, October 7). *What Is a Power Supply & How Does It Work? | ACT*. Advanced Conversion Technology. https://www.actpower.com/blog/what-is-a-power-supply-and-how-does-it-work/

[2] *Half Wave and Full Wave Rectifier: Function, Comparison, and Applications | Electronics Basics | ROHM*. (2023). Rohm.com. https://www.rohm.com/electronics-basics/ac-dc-converters/acdc_what2

[3] R Selvamathi, et al. *Electric Motor Drives and Their Applications with Simulation Practices*. Elsevier, 9 May 2022. https://shop.elsevier.com/books/electricmotor-drives-and-their-applications-withsimulation-practices/selvamathi/978-0-33-91162-7

[4] P. Horowitz and W. Hill, The Ar of Electronics, 3rd ed. Cambridge, U.K.: Cambridge Univ. Press, 2015.

[5] ON Semiconductor, 1N746A, 1N747A, 1N748A, 1N749A, 1N750A Series: Zener Voltage Regulators, datasheet, Dec. 2015. [Online]. Available: https://www.onsemi.com/pdf/datasheet/1n746a-d.pdf

[6] Electronics Tutorials. (2023). *Transformer Basics and Transformer Principles*. Retrieved from https://www.electronics-tutorials.ws/transformer/transformer-basics.html

Appendices

Formulas:

$$V_P = \frac{2V_{RMS}}{\sqrt{2}}$$

$$V_M = V_P - 2(0.7V)$$

$$V_{AVE} = V_{DC} = \frac{2V_M}{\pi}$$

$$\frac{L_1}{L_2} = \left(\frac{V_1}{V_2}\right)^2$$

$$V_{r(p-p)} = \frac{P_{out}}{2fC_1V_M}$$

$$C_1 = \frac{P_{out}}{2fV_{r(p-p)}(\frac{V_{DC}\pi}{2})}$$

$$I_D = \frac{P_{Out}}{V_{Out}}$$

$$I_{RS} = I_D + I_Z$$

$$V_{RS} = V_M - V_Z$$

$$R_L = (\frac{V_{out}^2}{P_{MAX}})$$

Circuit

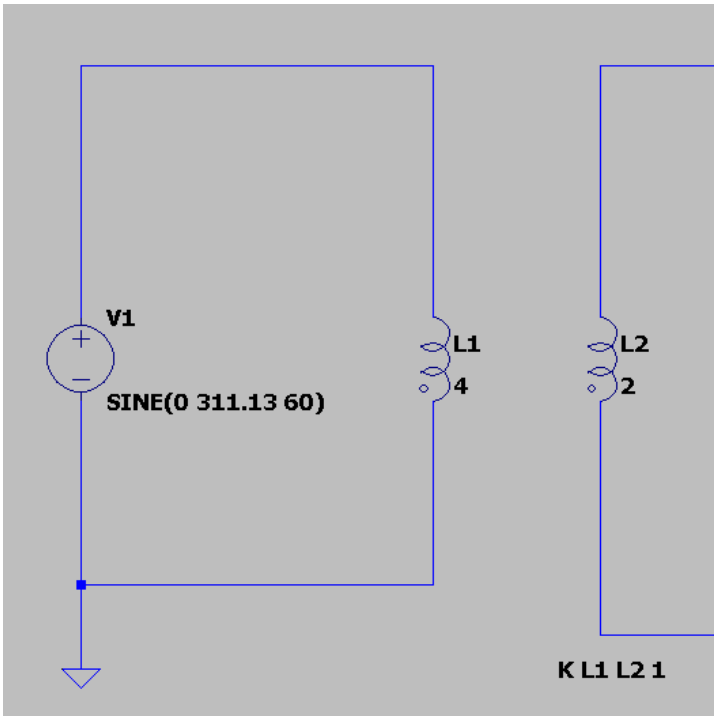

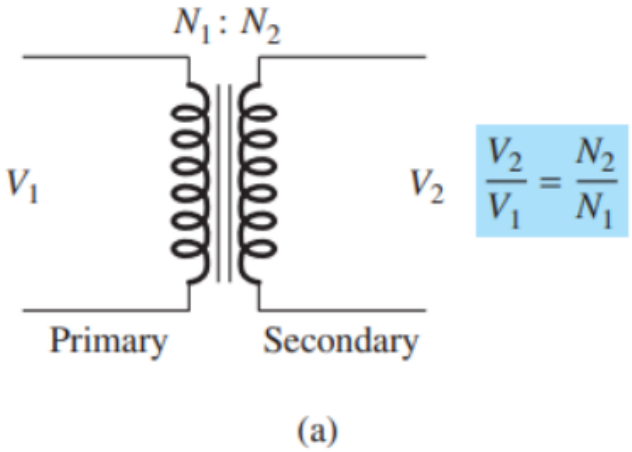

Transformer

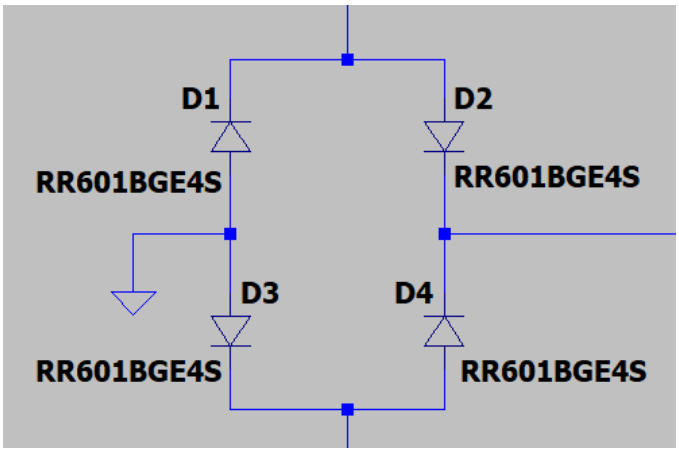

Rectifier

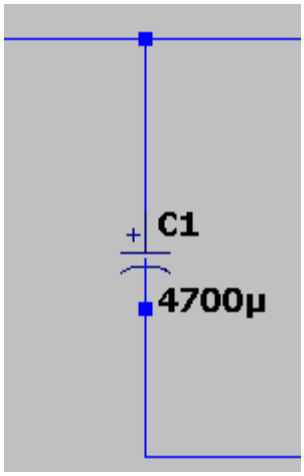

Bypass Capacitor

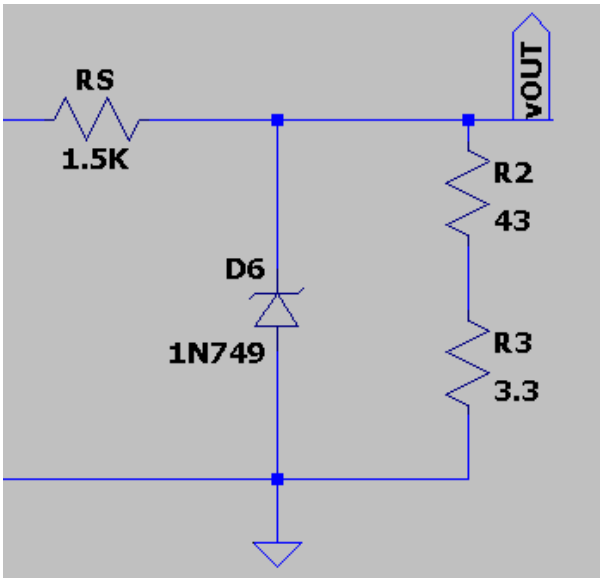

Voltage Regulator

Graph

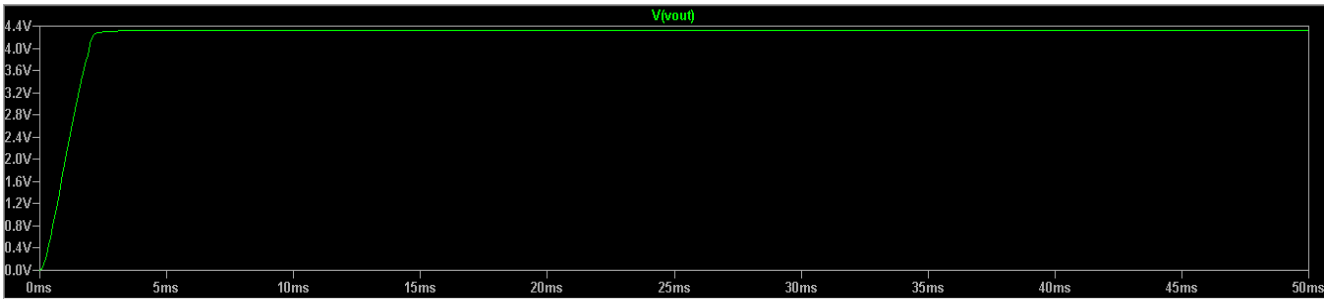

Voltage with Full Load

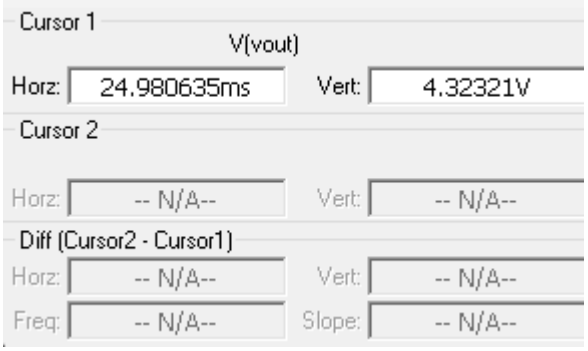

Output Voltage

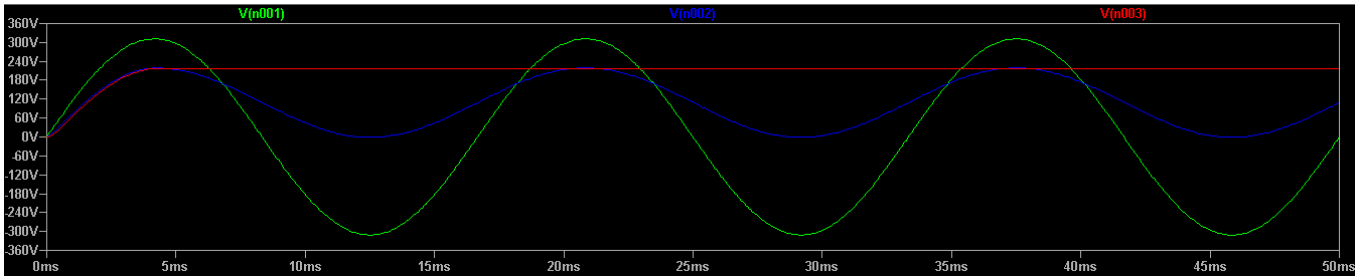

Waveform of the first winding, the second winding, and the voltage across the capacitor

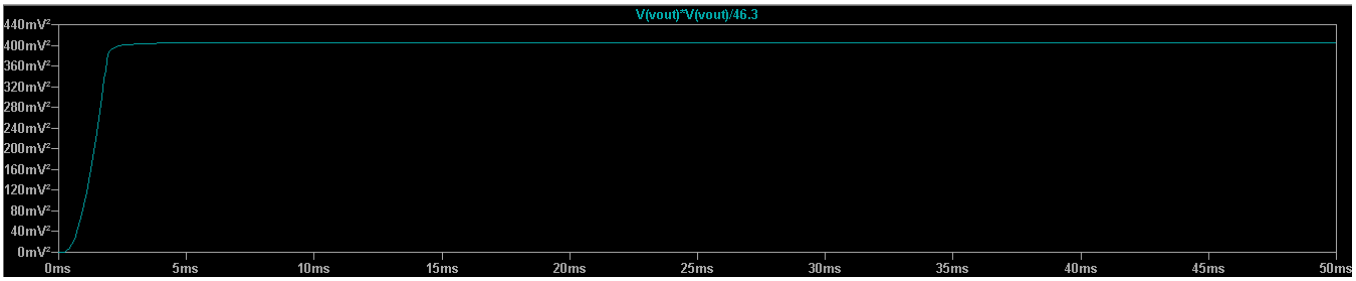

Power Output

Data Sheets

RR601BGE4S (Diode used in Rectifier)

Absolute Maximum Ratings (Tc = 25°C)

Parameters	**Conditons**	**Limit**	**Unit**
Repetitive peak reverse voltage	Duty≤0.5	400	V
Reverse Voltage	Direct Reverse voltage	400	V
Average rectified forward current	60Hz half sin wave, Resistive load (T =98°C	6	A
Forward current surge peak	60 Hz half sin wave, Non-repetitive at Tj = 25°C	40	A
Operating junction Temperature (Tj)		150	°C

Storage Temperature		55 to 150	°C

Electrical Characteristics (Tj = 25°C)

Parameter	Conditions	Min	Typ	Max	Unit
Forward voltage	I = 6A	~	0.98	1.1	V
Reverse Current	VR = 400 V	~	0.05	10	A
Thermal Resistance	Junction to case	~	~	6.0	°C/W

1N749A (Zener Diode)
(Unavailable in LTSpice)

VZ (V) @ IZ = 20mA			**ZZ (Ω) @ IZ = 20mA**	**IZM (mA)**	**IR (µA) @ VR = 1V**	
Min.	**Typ.**	**Max.**	22	85	**Ta = 25°C**	**Ta = 125°C**
4.09	4.3	4.52			2	30