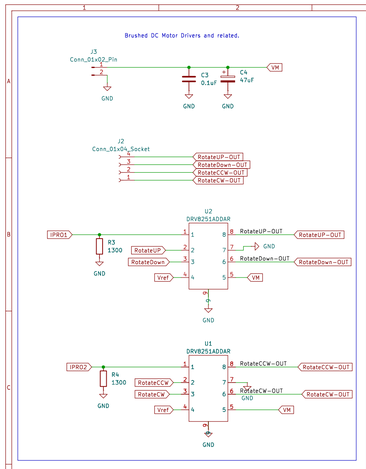

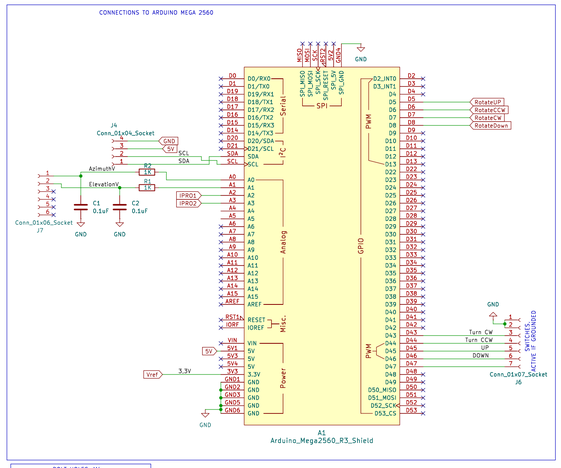

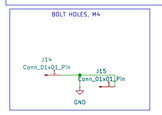

A PCB with dual DRV8251A and connections to Arduino Uno

Sheet: /
File: K3NG-rotator-shield.kicad_sch

Title:

Size: A1	Date:	**Rev:**
KiCad E.D.A. 8.0.6		Id: 1/1