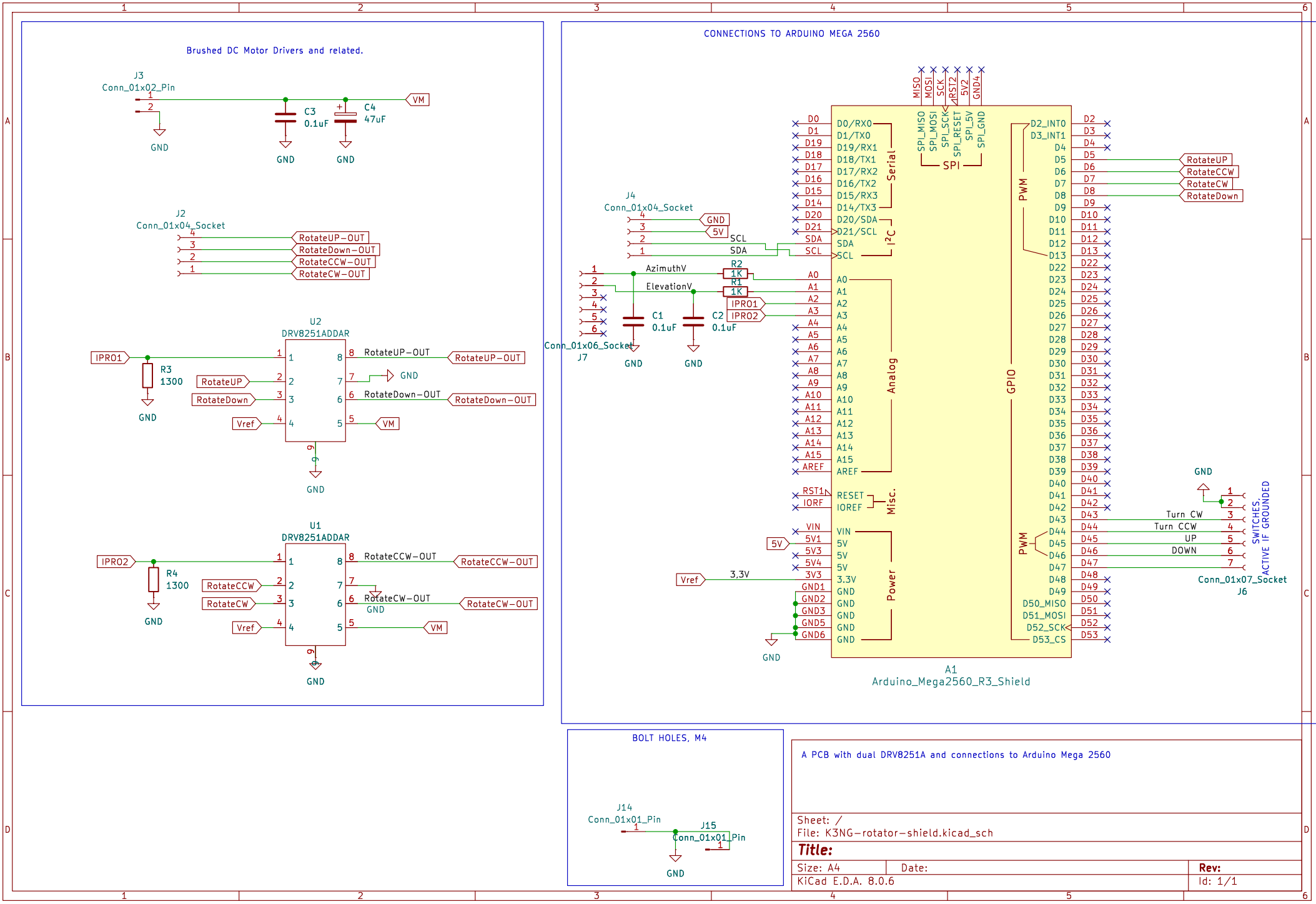
Brushed DC Motor Drivers and related.
J3
Conn_01x02_Pin
C3
0.1uF
C4
47uF
VM
GND
J2
Conn_01x04_Socket
RotateUP-OUT
RotateDown-OUT
RotateCCW-OUT
RotateCW-OUT
U2
DRV8251ADDAR
IPRO1
R3
1300
RotateUP
RotateDown
Vref
U1
DRV8251ADDAR
IPRO2
R4
1300
RotateCCW
RotateCW
CONNECTIONS TO ARDUINO MEGA 2560
J4
Conn_01x04_Socket
SCL
SDA
AzimuthV
ElevationV
R2
1K
R1
1K
C1
0.1uF
C2
0.1uF
Conn_01x06_Socket
J7
Serial
I2C
Analog
Misc.
Power
SPI
GPIO
PWM
Turn CW
Turn CCW
UP
DOWN
Conn_01x07_Socket
J6
SWITCHES, ACTIVE IF GROUNDED
3.3V
A1
Arduino_Mega2560_R3_Shield
BOLT HOLES, M4
J14
Conn_01x01_Pin
J15
Conn_01x01_Pin
A PCB with dual DRV8251A and connections to Arduino Mega 2560
Sheet: /
File: K3NG-rotator-shield.kicad_sch
Title:
Size: A4
Date:
Rev:
KiCad E.D.A. 8.0.6
Id: 1/1