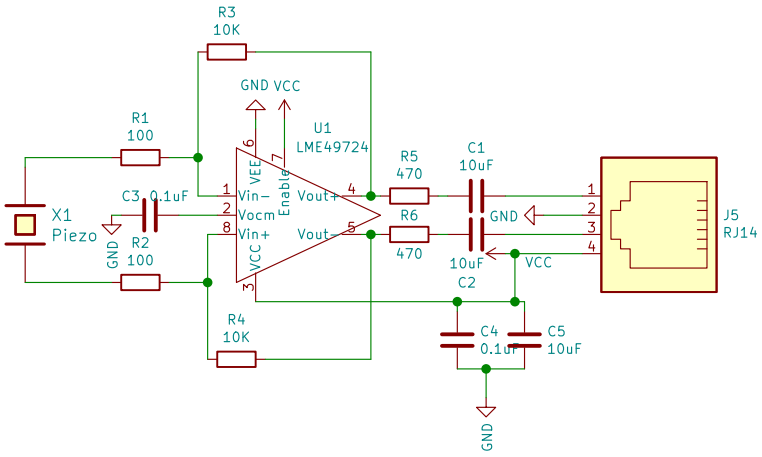

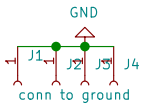

Sheet: /
File: piezo.sch

Title: High Z amplifier for piezo electric crystal

Size: A4	Date: 27 07 2020	Rev:
KiCad E.D.A. kicad 5.1.6-c6e7f7d87ubuntu20.04.1		Id: 1/1