USB-C Receptecal

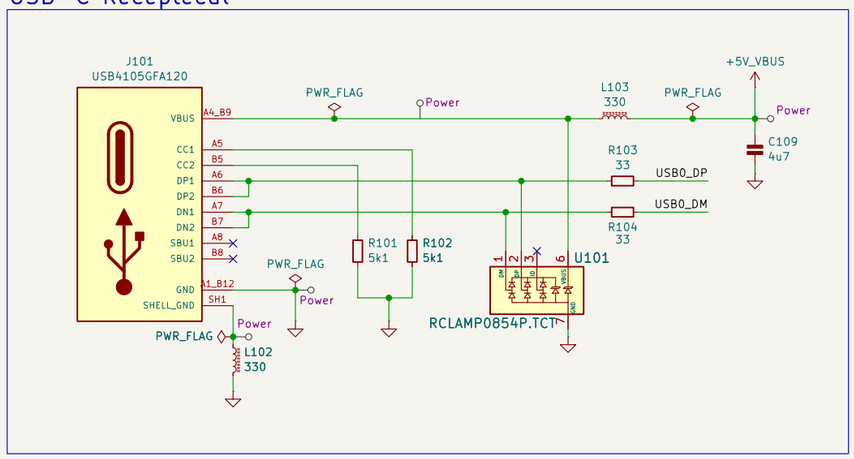

Debug Header

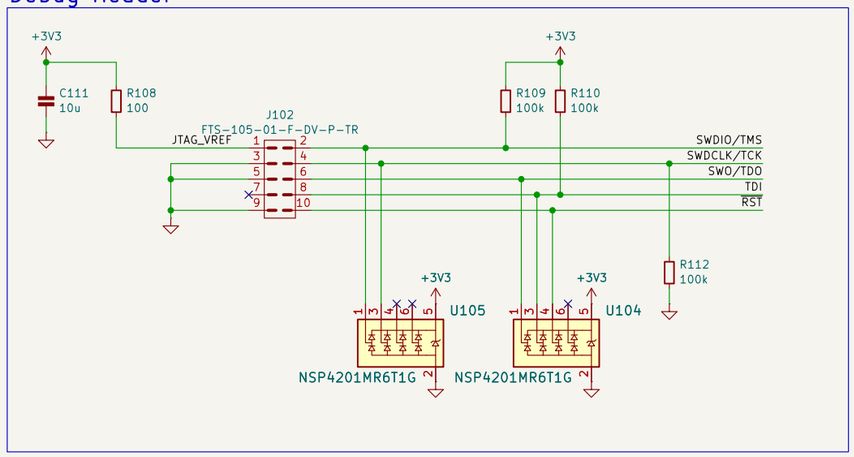

Power Supply

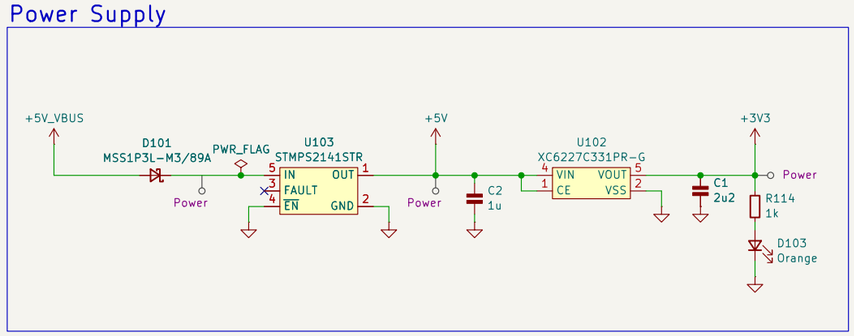

MCU

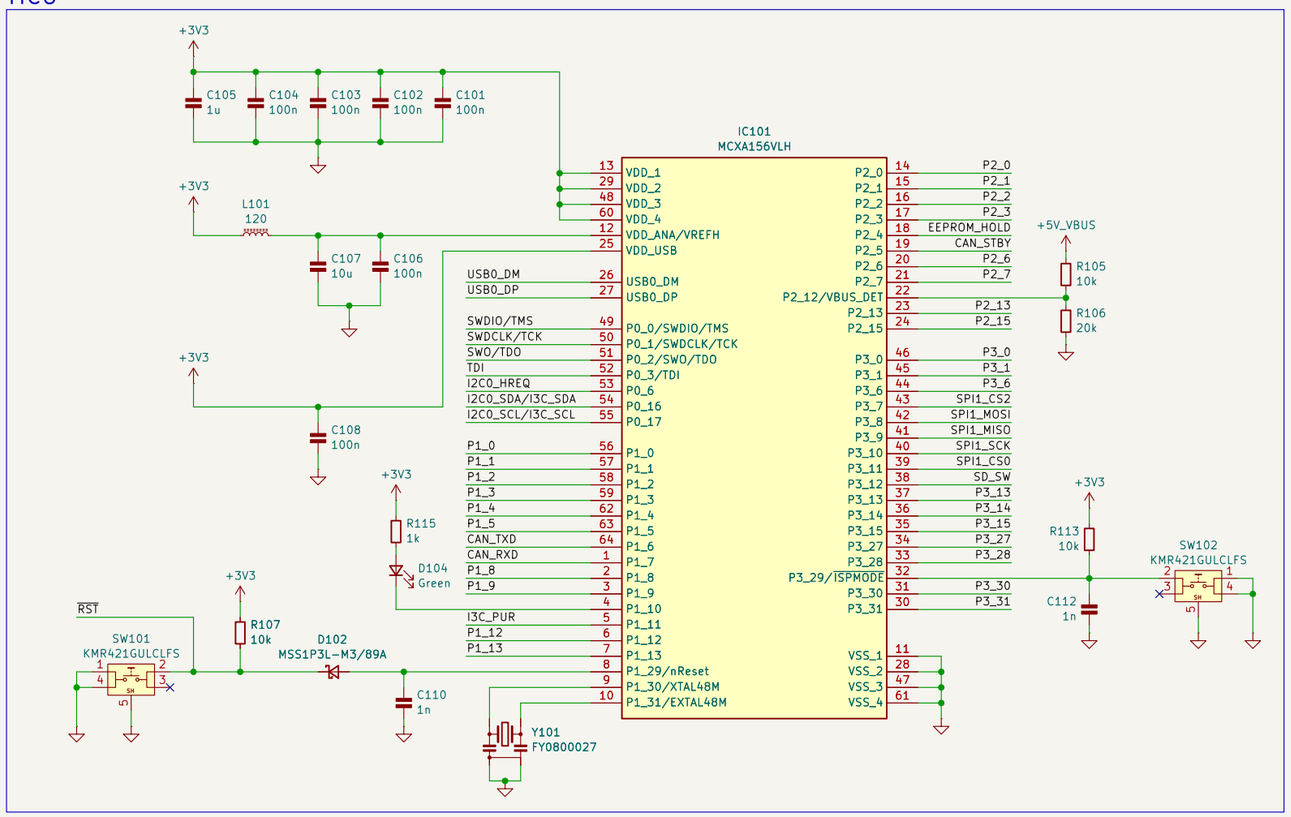

EEPROM

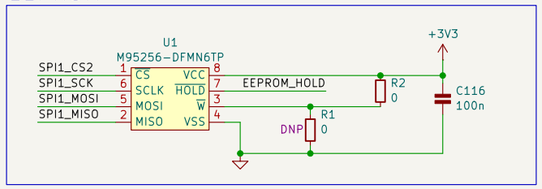

Pin Headers

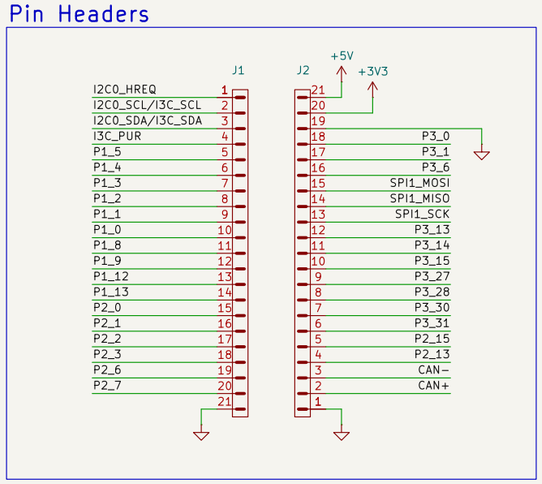

CAN Transceiver

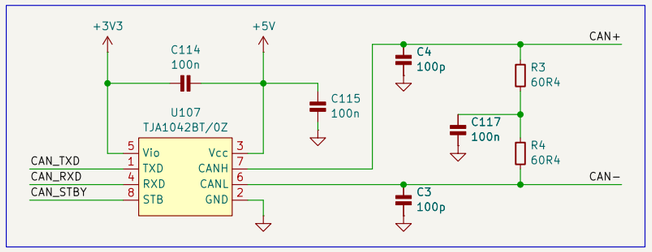

Micro SD Card

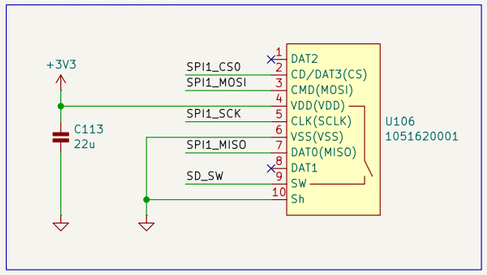

Schematic: YetiX-A Devboard

Sheet: YetiX-A_DevBoard/ File: YetiX-A_DevBoard.kicad_sch		KiCad E.D.A. 10.0.0
Project: YetiX-A_DevBoard	SuperdocHD	Rev: 0.0.2
Date: 2026-04-01	Size: A3	Id: 1/1