EVBSFM20R User Manual

SEONGJI

September 10, 2019

Contents

Hardware **3**
Test Program **6**

Confidential Only for SIGFOX

Copyright SEONGJI | All Rights Reserved | seongji.co.kr

Model	F/W
EVBSFM20R	V300

Confidential Only for SIGFOX

Hardware

Evaluation Kit Component

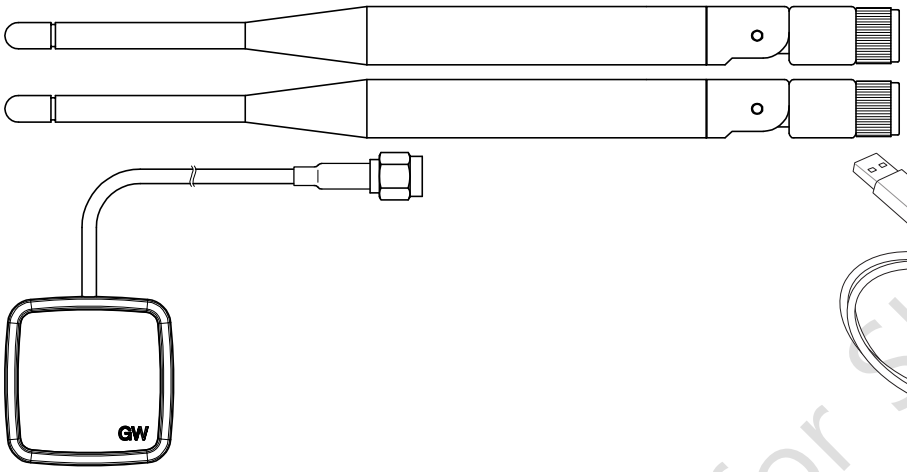

SIGFOX antenna 1ea

2.4GHz antenna 2ea

GPS antenna 1ea

USB cable

EVBSFM20R

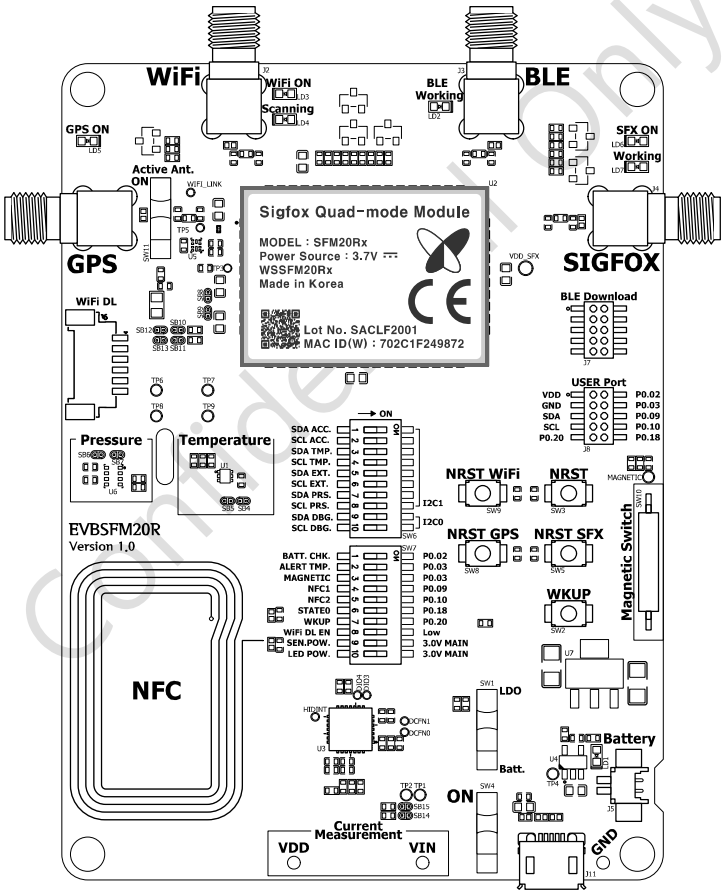

[Fig. Evaluation Kit components]

Confidential Only for SIGFOX

EVBSFM20R Board

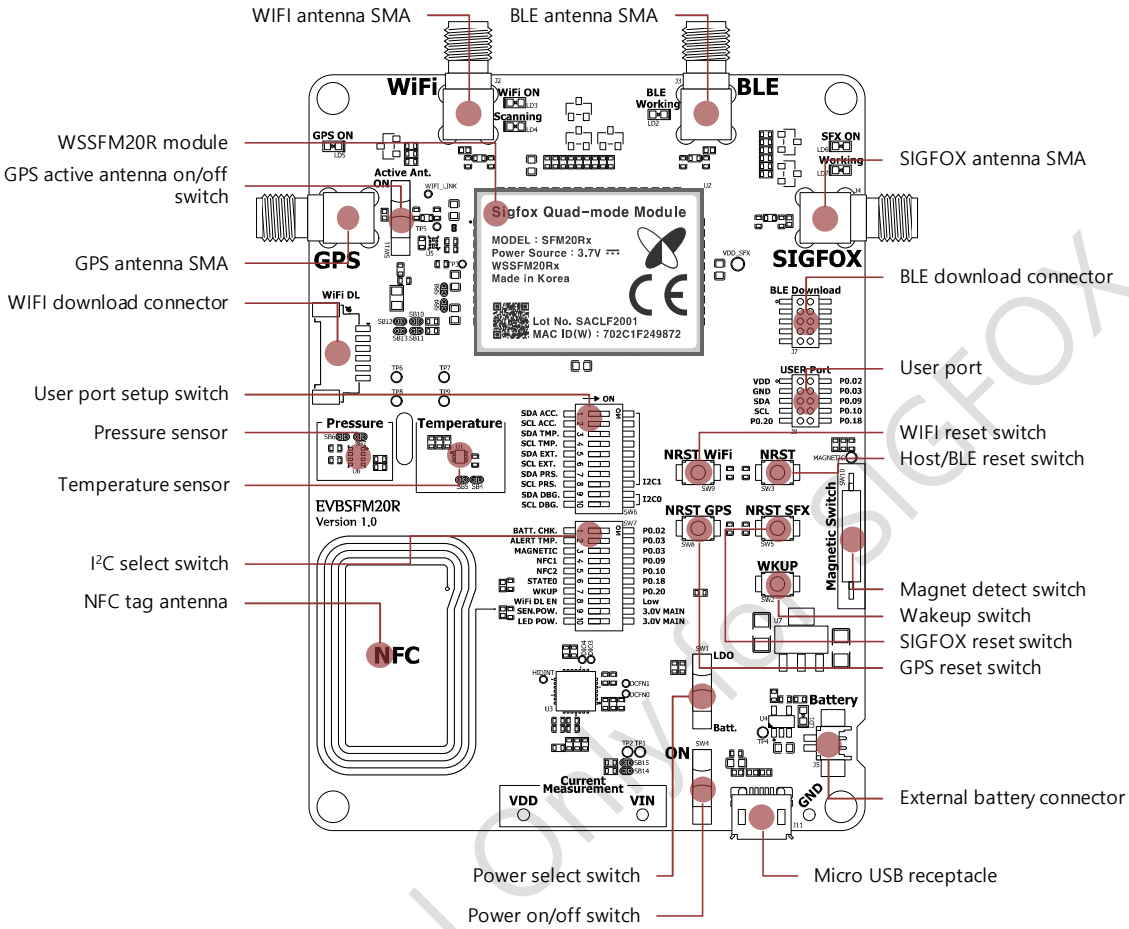

[Fig. EVMSFM20R]

- SFM02R module
  - SIGFOX Quad-mode module
- Antenna SAM connector
  - SIGFOX antenna
  - WiFi antenna : 2.4GHz antenna
  - BLE antenna : 2.4GHz antenna
  - GPS antenna
- BLE download connector
  - JLink SWD connector of Host CPU and BLE for debugging and firmware writing
- WiFi reset switch
  - push to reset WiFi chip inside module
- Host / BLE reset switch
  - push to reset Host CPU and BLE chip inside module
- GPS reset switch
  - push to reset GPS chip inside module

Confidential Only for SIGFOX

- SIGFOX reset switch
  - push to reset SIGFOX chip inside module
- Magnet detect switch
  - Magnet detect switch to test magnet switch
- Wake-up switch
  - push to wake-up module from sleep state
- External battery connector
  - Set Power select switch to use Batt. if external battery is power source for operation
- Micro USB receptacle
  - Micro USB receptacle for power supply into the EVB and command interface between windows PC and EVB
- Power select switch
  - Power select between LDO output and external battery
- Power on/off switch
  - EVB power on or off switch
- Temperature sensor I2C address set
  - 1-2 : 0b1001001(7bit)
  - 2-3 : 0b1001000(7bit)
- I2C selector
  - I2C connection selector for internal accelerometer, temperature sensor located on EVB and external I2C devices.
- NFC antenna
  - NFC tag antenna of the module
- User port setup switch
  - User port connection setting switch to the module (*see detail in schematic)
- I2C select switch
  - I2C connection selection switch (*see detail in schematic)
- User port
  - User configurable pins
- I2C temperature sensor
  - TMP102
- I2C Pressure sensor
  - BMP280
- WiFi download connector
  - Download connector of WiFi chip inside module

Confidential Only for SIGFOX

Schematic

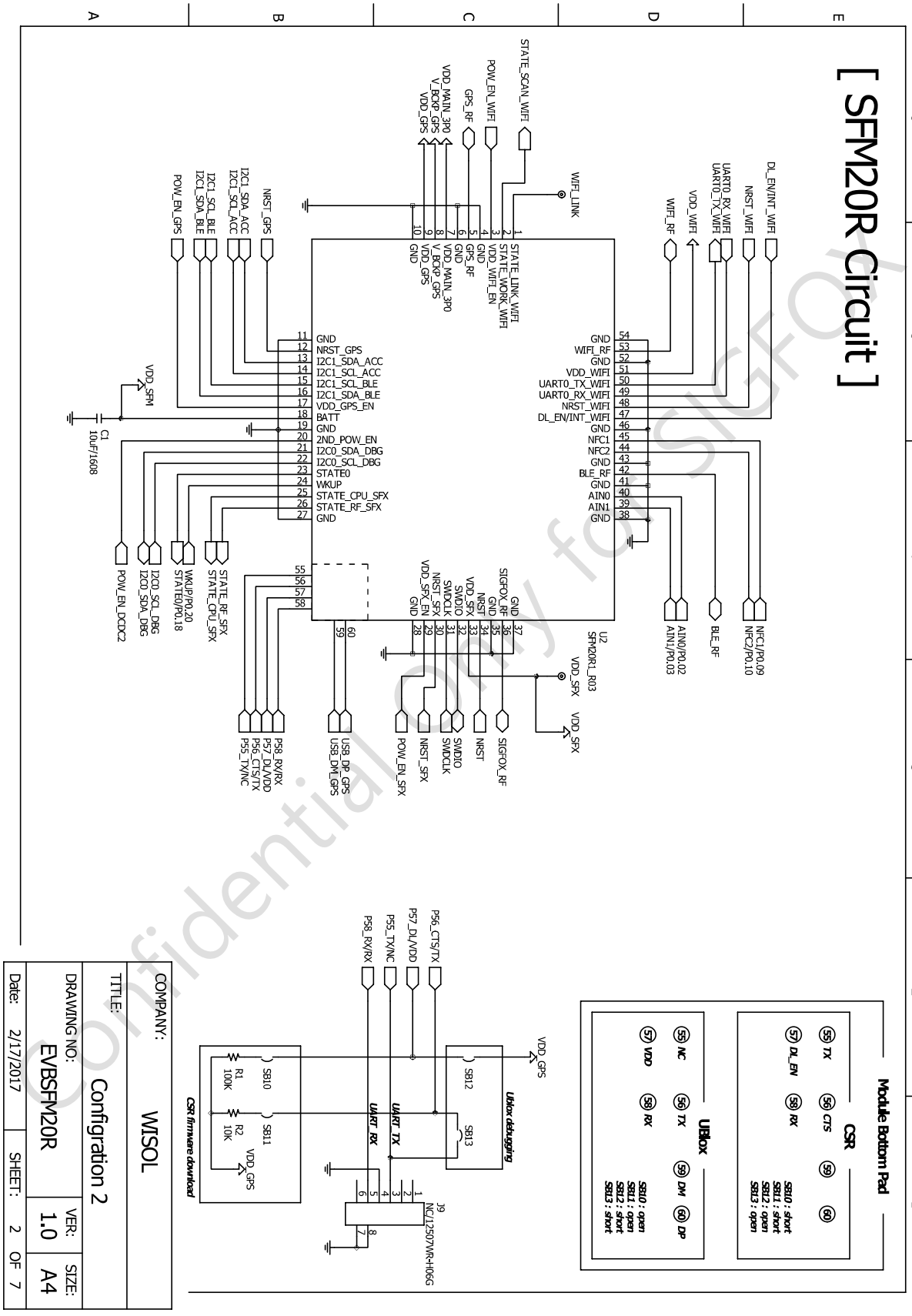

Confidential Only for SIGFOX

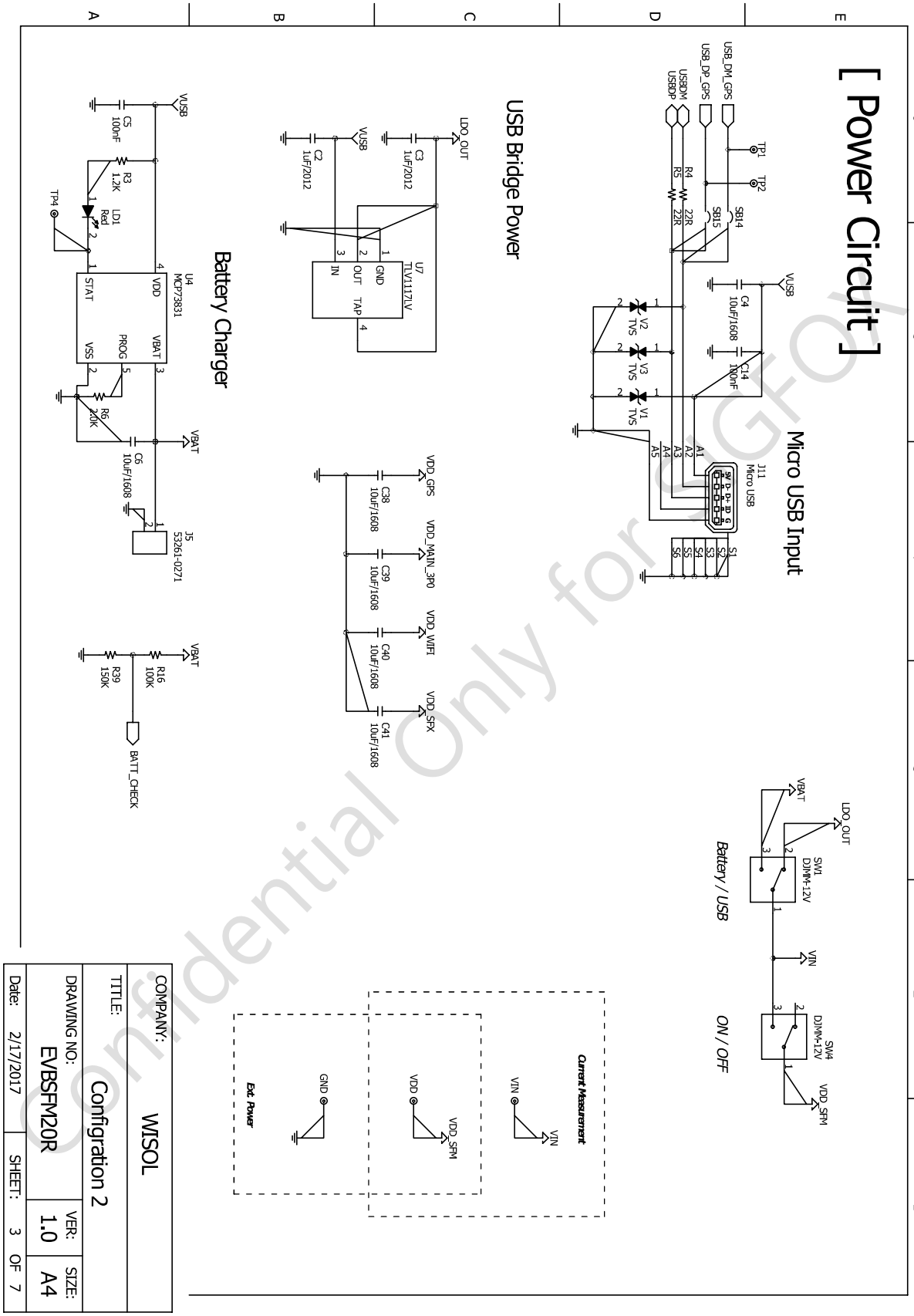

Confidential Only for SIGFOX

COMPANY:	WISOL		
TITLE:	Configration 2		
DRAWING NO:	EVBSFM20R	VER:	1.0
		SIZE:	A4
Date: 2/17/2017	SHEET: 3 OF 7		

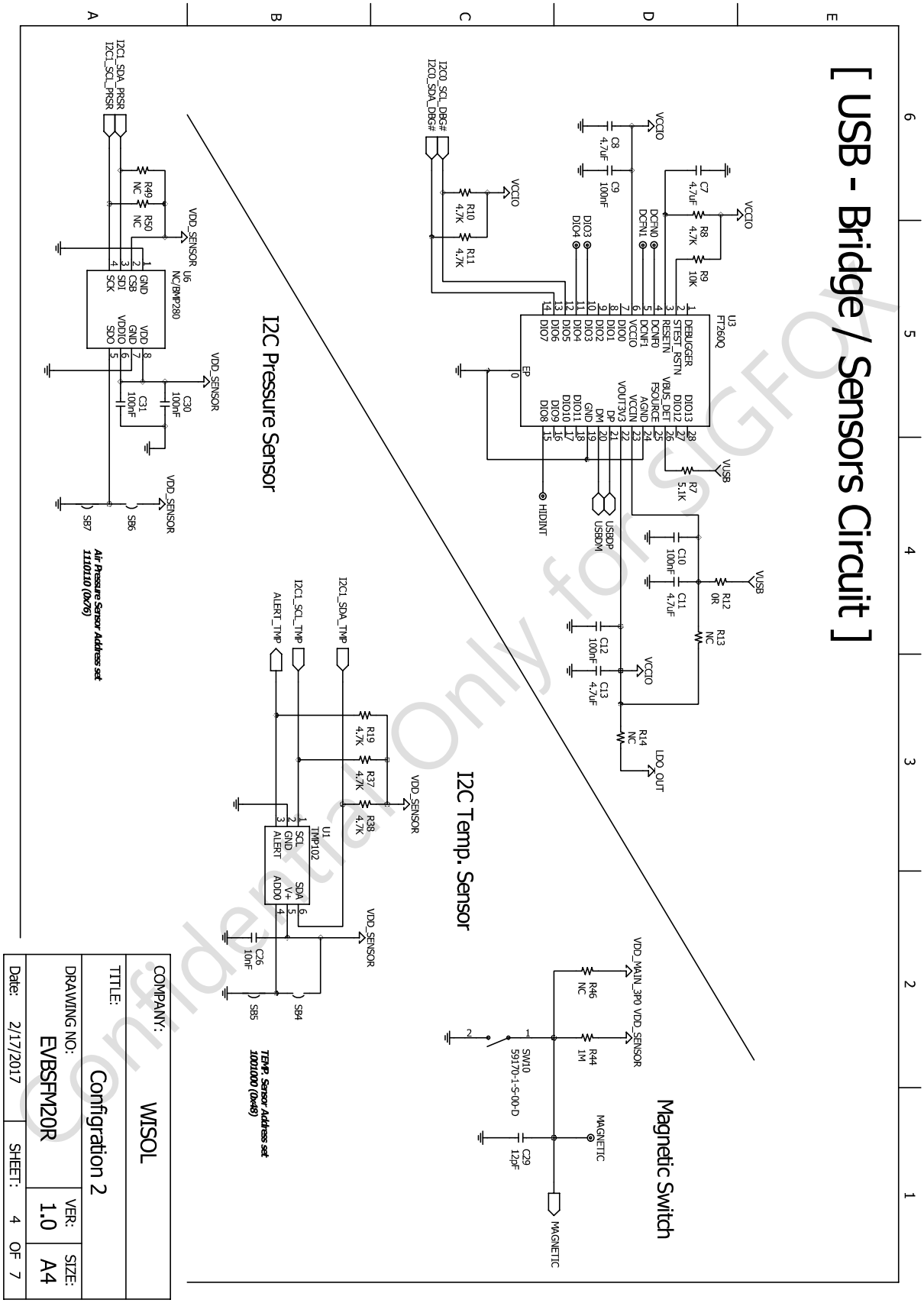

Confidential Only for SIGFOX

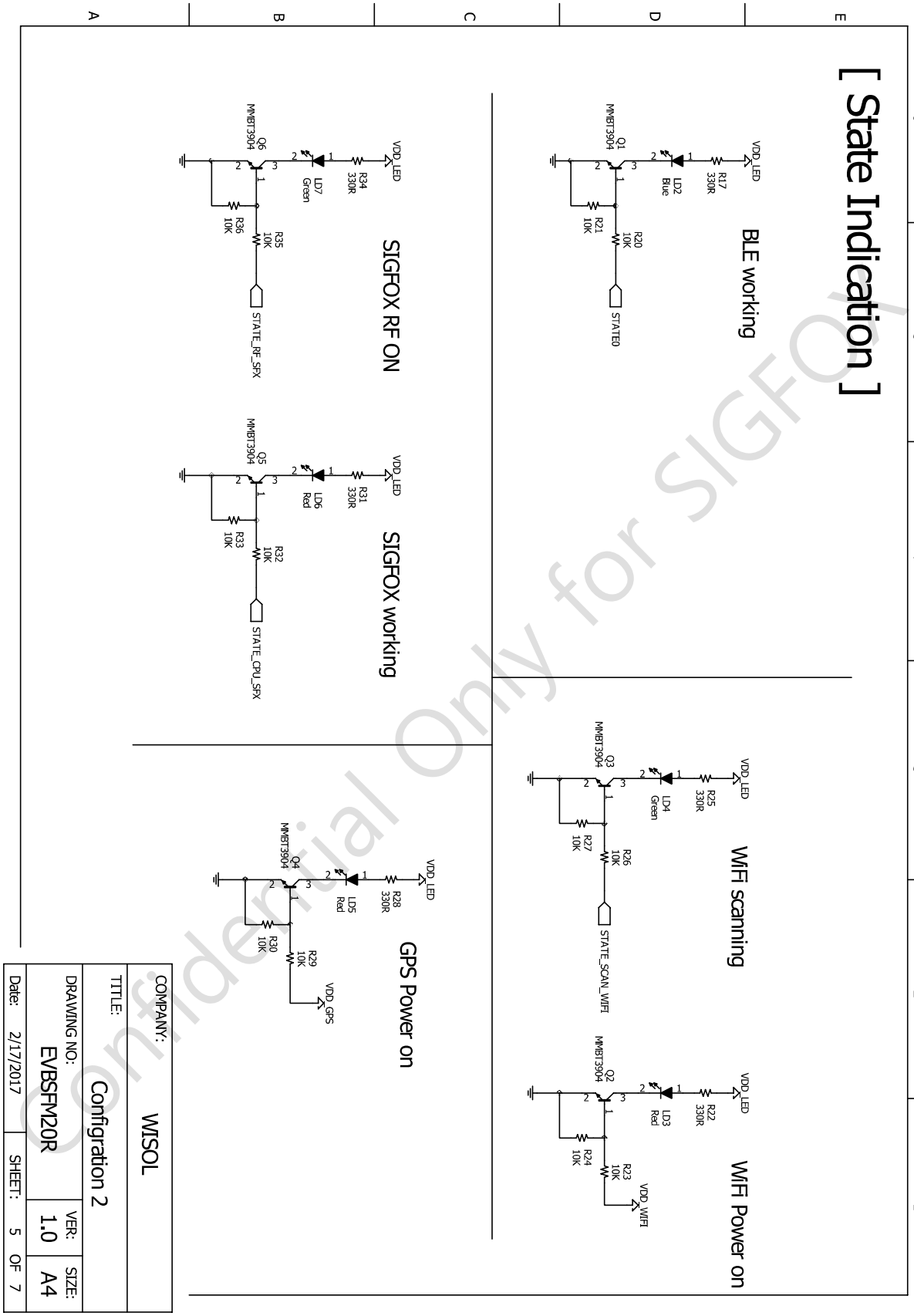

Confidential Only for SIGFOX

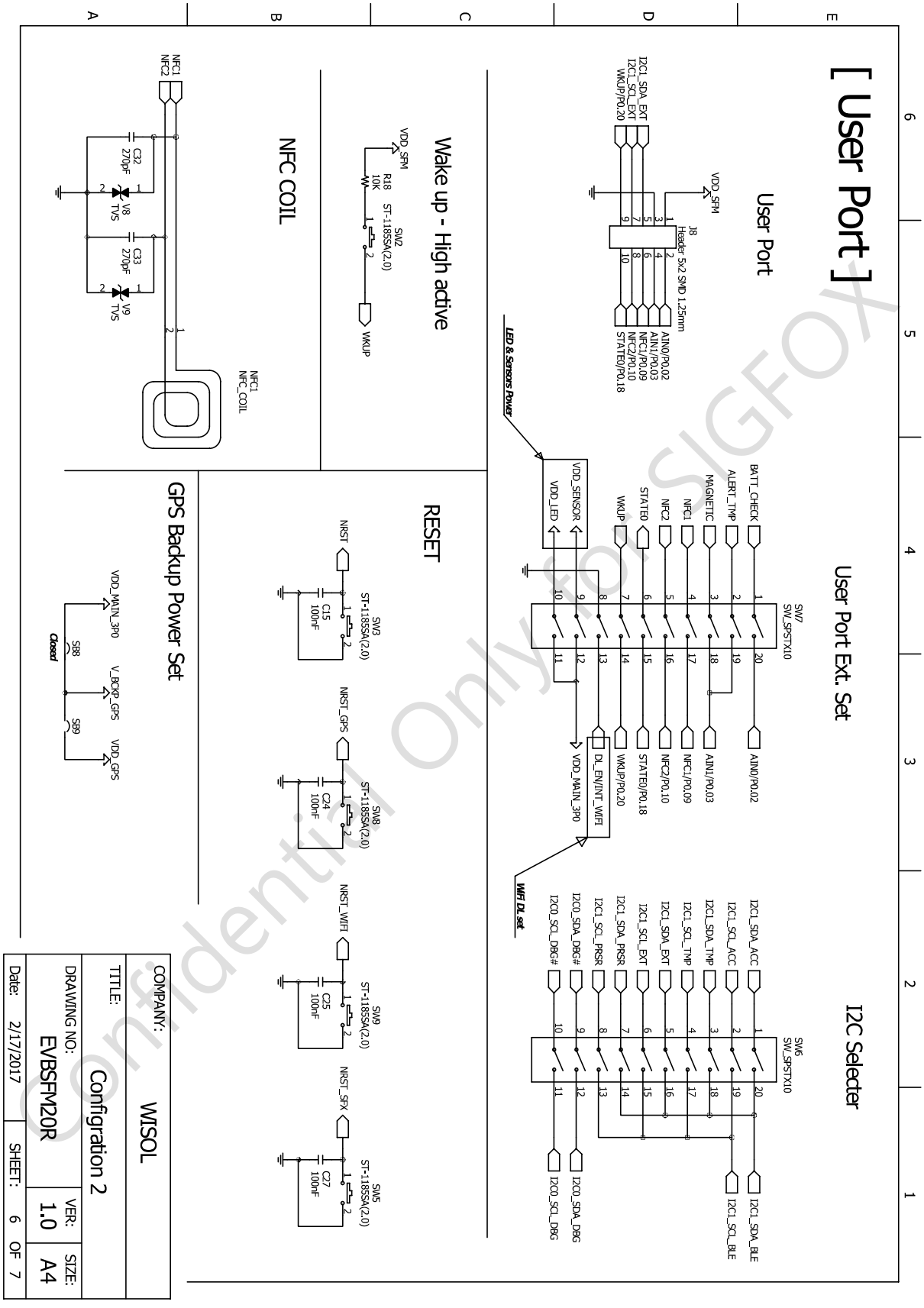

Confidential Only for SIGFOX

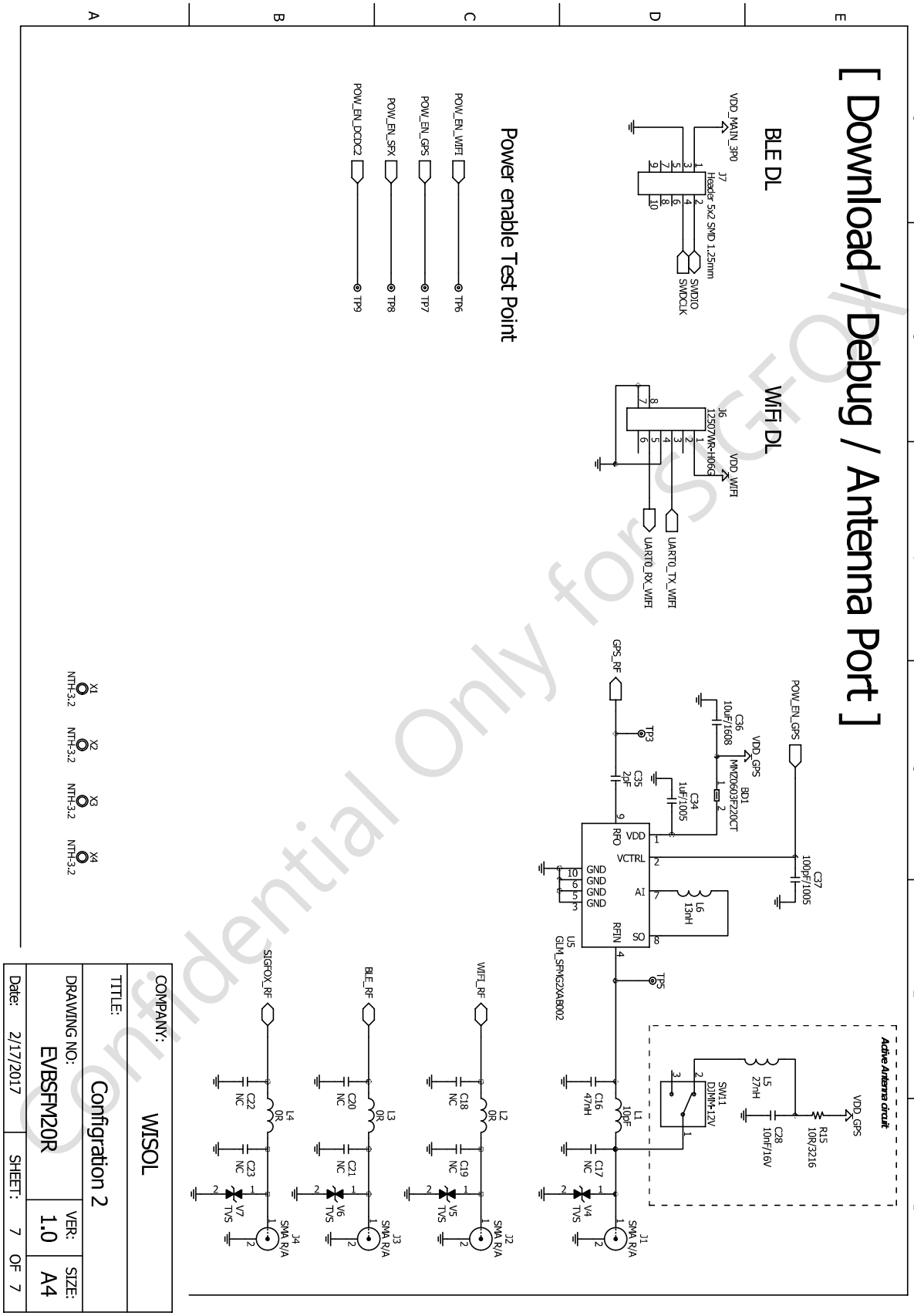
[Download / Debug / Antenna Port]
BLE DL
WiFi DL
Power enable Test Point
Active Antenna circuit
Confidential Only for SGFOX
COMPANY: WISOL
TITLE: Configration 2
DRAWING NO: EVBSFM20R
VER: 1.0
SIZE: A4
Date: 2/17/2017
SHEET: 7 OF 7

User port pin description

Connector	Pin No.	Pin name	Function
J8	1	VDD_SFM	V+
	2	AIN0/P0.02	Can be connected to pin AIN0/P0.02 of nRF52832 inside module.
	3	GND	Ground
	4	AIN1/P0.03	Can be connected to pin AIN1/P0.03 of nRF52832 inside module.
	5	I2C1_SDA_EXT	Can be connected to pin I2C1_SDA_EXT of the module
	6	NFC1/P0.09	Can be connected to pin NFC1/P0.09 of nRF52832 inside module.
	7	I2C1_SCL_EXT	Can be connected to pin I2C1_SCL_EXT of the module
	8	NFC2/P0.10	Can be connected to pin NFC2/P0.10 of nRF52832 inside module.
	9	WKUP/P0.20	Can be connected to pin P0.20 of nRF52832 inside module.
	10	STATE0/P0.18	Can be connected to pin P0.18 of nRF52832 inside module.

Confidential Only for SIGFOX

Test Program

Evaluation board Connection

1. Connect EVBSFM20R board to windows OS PC via micro USB cable

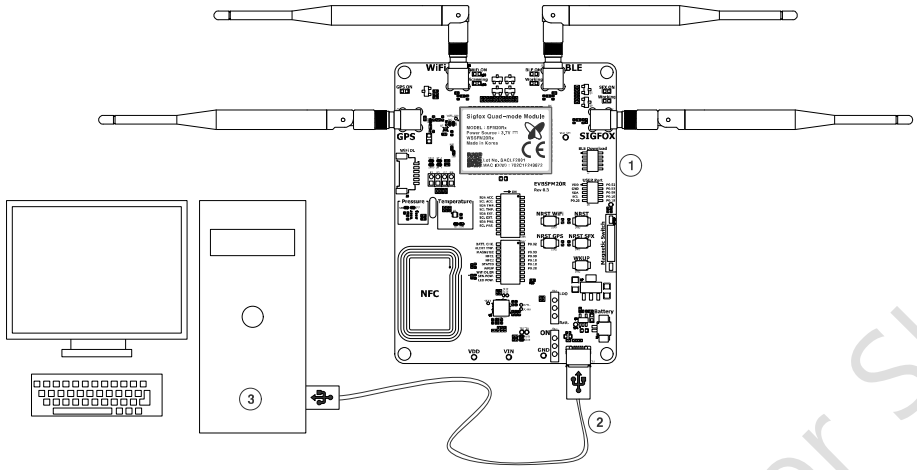

(1) EVMSFM20R
(2) Micro USB cable
(3) Windows PC

[Fig. EVBSFM20R connection]

Program execution

1. Connect EVBSFM20R to Windows PC via USB cable.
   - EVBSFM20R support USB HID class driver which will be already installed in most OS.

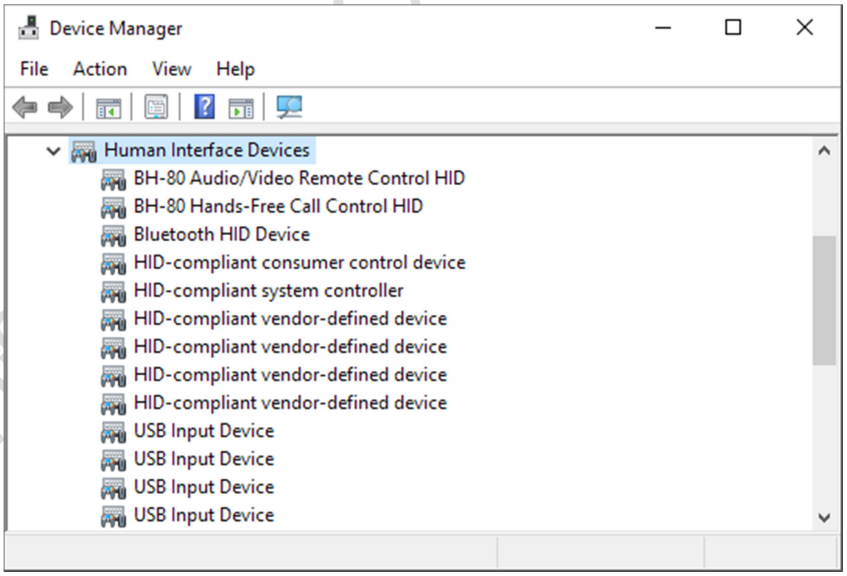

[Fig. Device manager]

2. Run test program "SFM20R_APP.exe"

Confidential only for SIGFOX

Test program Description

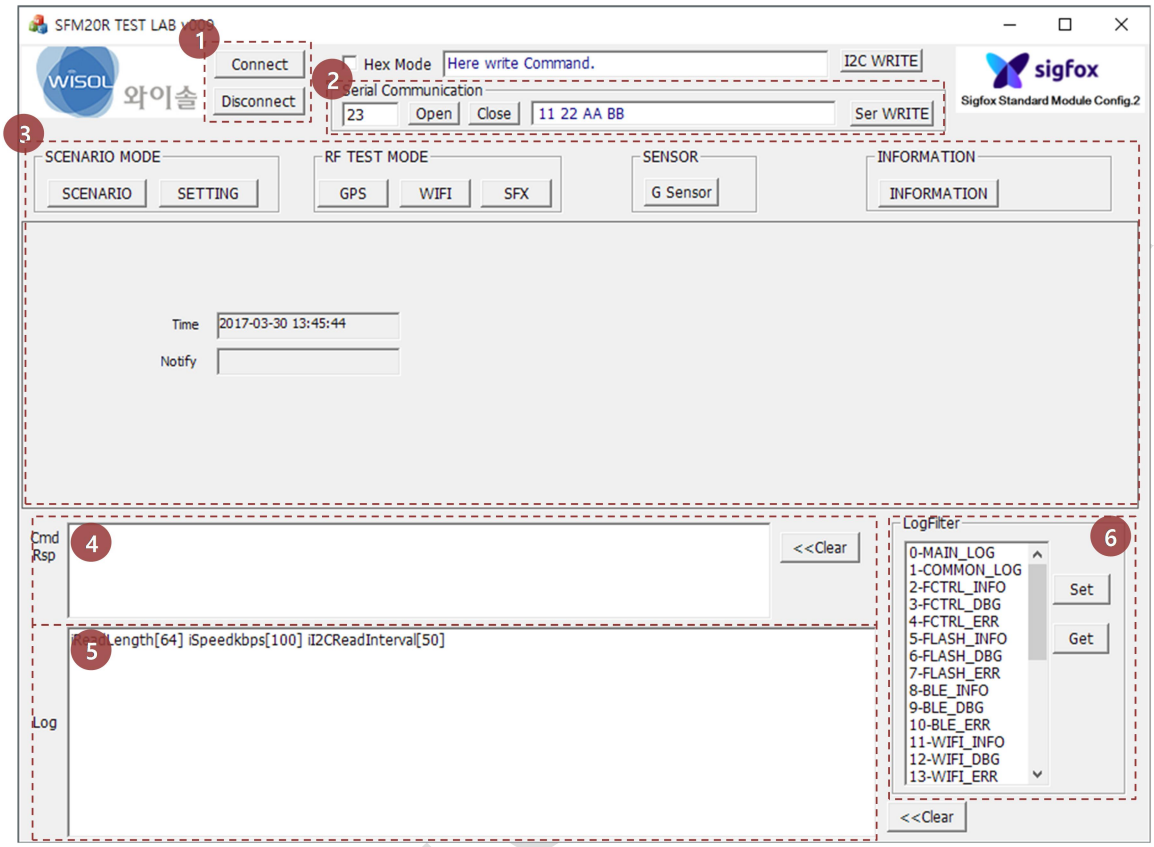

[Fig. Test program SFM20R_APP]

1. Connect / Disconnect button
   - Connect : Connect test program and EVB.
   - Disconnect : Disconnect test program from EVB.
2. Serial Communication
   - Serial communication port setting and connection to be connected to the external serial com port for bypassing of serial command.
   - ***Not supported in this version.***
3. menu package for each bellow operation
   - SCENARIO : Operate as predefined software scenario
   - SETTING : Setting menu mode for configuration of scenario
   - RF TEST MODE : RF test mode command for GPS, WIFI, BLE and SIGFOX
   - SENSOR : Menu for Accelerometer sensor
   - INFORMATION :
     - BLE : UUID and MAC address
     - WIFI : MAC MAC address

Confidential

- SIGFOX : ID and PAC code

4. Cmd Rsp : Display response message for command
5. Log : Display log message
6. LogFilter : Log filter configuration menu

Test program start

1. Run test program
2. Connect Windows PC to EVB board via USB cable
3. Click Connect button
4. Notification dialog will be pop up as soon as click connection button. Click "OK" button and then push the NRST button on the EVB board to reset and enter to the test mode.

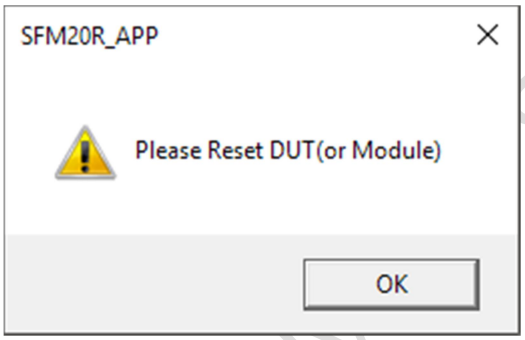

[Fig. Notification dialog]

5. EVB enter to the SETTING menu mode at initial connection from hardware reset
6. After enter to the SCENARIO mode, EVB only operate with its own task scheduler and doesn't support to change its operating mode anymore.
7. To enter to test mode from SCENARIO mode, user has to proceed above sequence again.

Setting menu

User can set or get configuration value of the scenario mode on this menu.

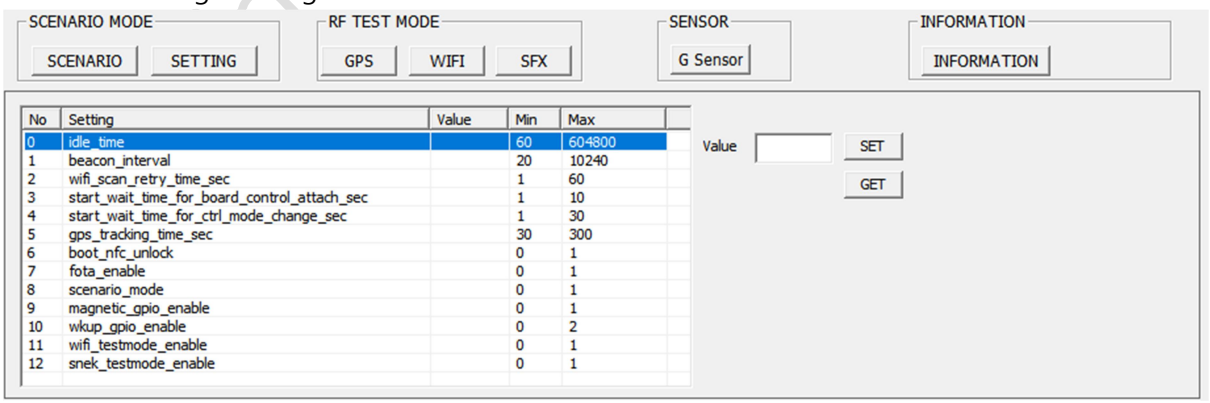

[Fig. Setting menu]

1. Select configuration item on the list
2. Input value on value edit box and click SET button to set value

Confidential Only SIGFOX

3. Click GET button to get value of selected item

GPS menu

Double click the command item or write command on Command edit box located on right and then click Send button to execute command.

Configuration value list is defined on GPS_CommandList.txt.

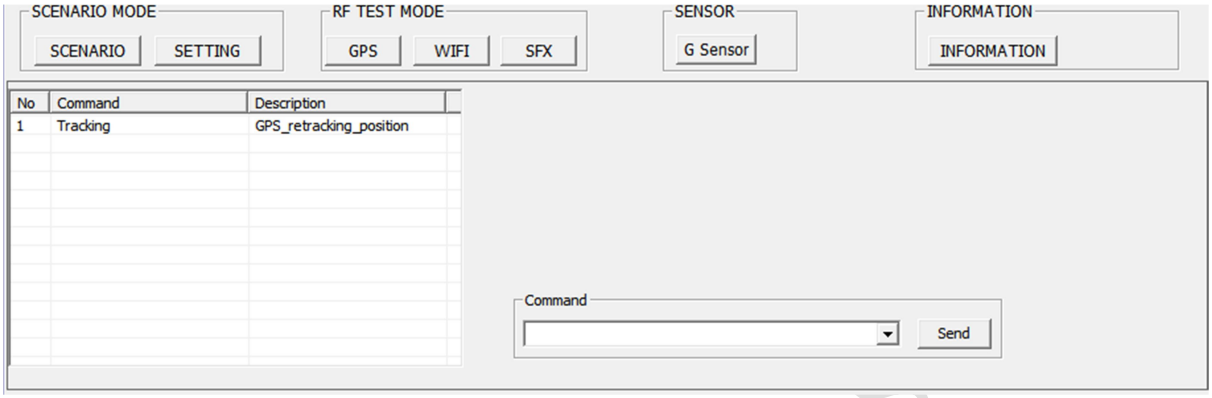

[Fig. GPS menu]

WIFI menu

Double click the command item or write command on Command edit box located on right and then click Send button to execute command.

Configuration value list is defined on WiFi _ATCommandList.txt.

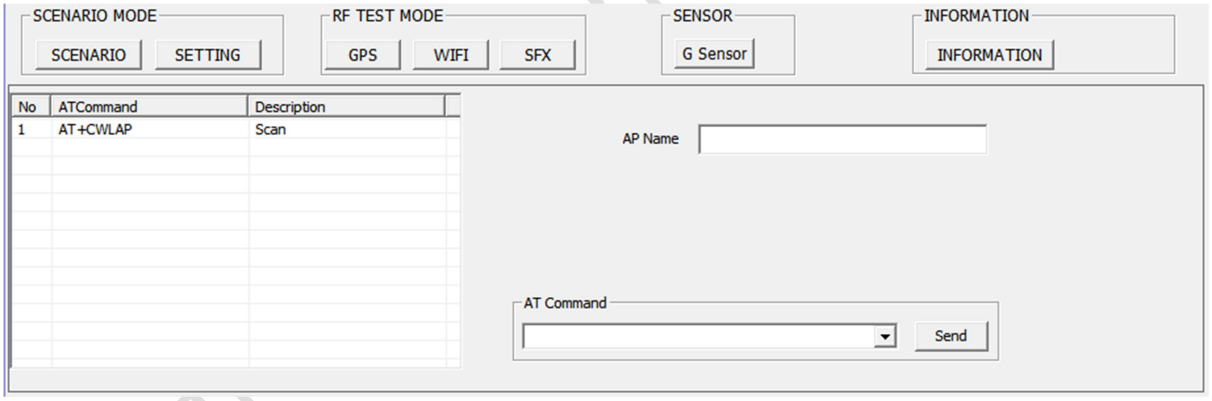

[Fig. WIFI menu]

SIGFOX menu

Double click the command item or write command on Command edit box located on right and then click Send button to execute command.

Configuration value list is defined on SigFox_ATCommandList.txt.

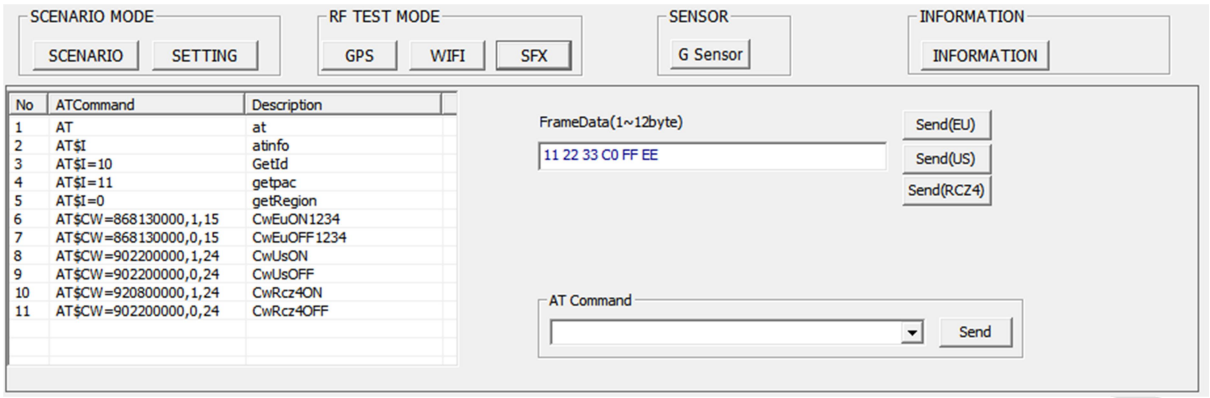

[Fig. SIGFOX menu]

Information menu

Key information of module displayed.

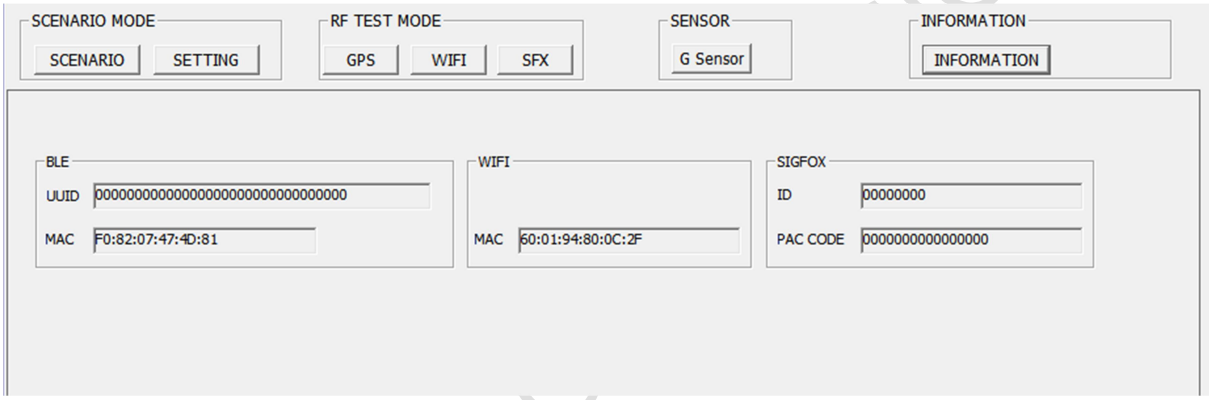

[Fig. Information menu]

Confidential