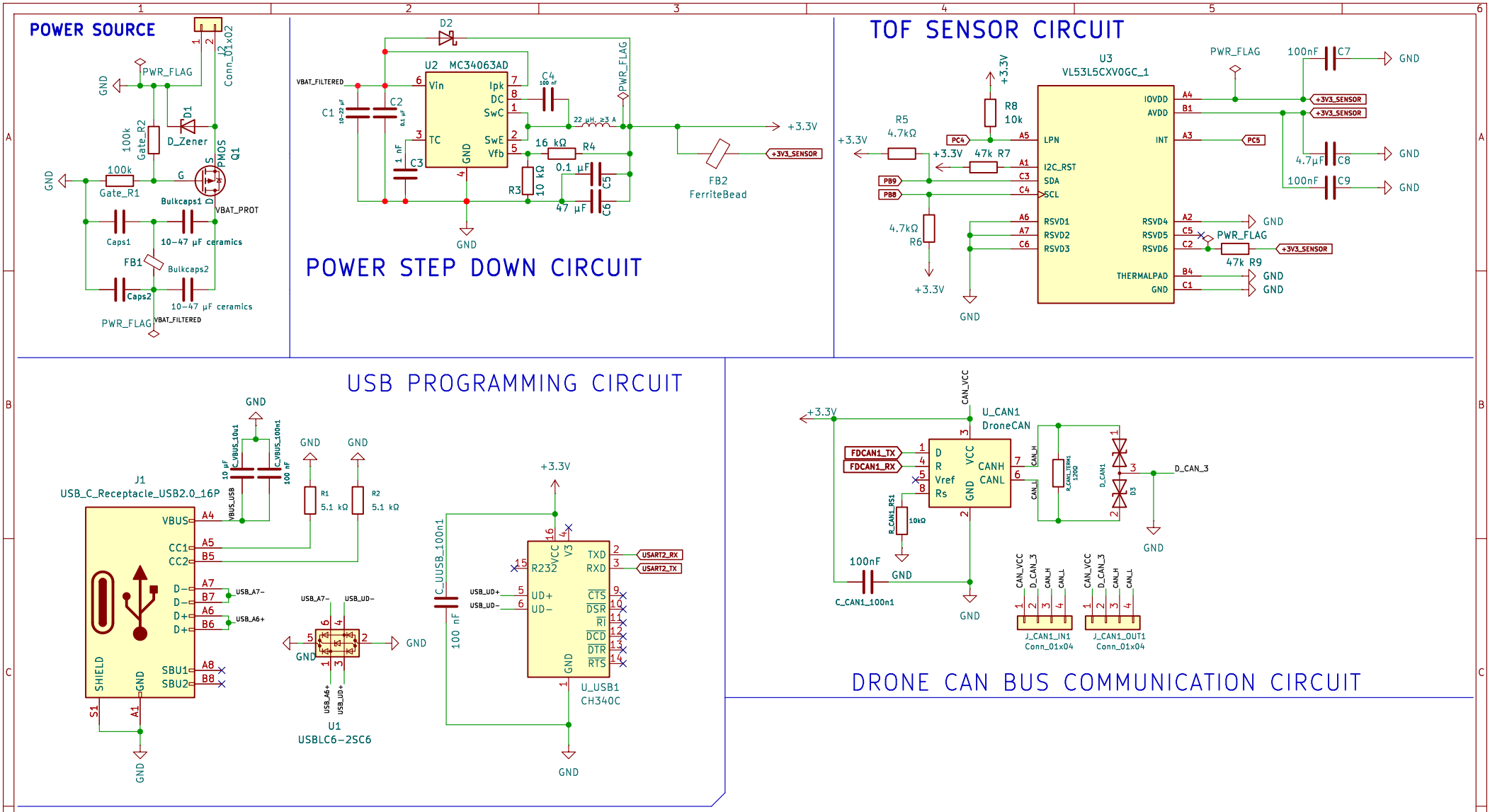

GROUP 15		
Sheet: /		
File: SPARC_module.kicad_sch		
Title: SPARC MODULE CIRCUITS		
Size: A4	Date: 2026-01-30	**Rev: 1**
KiCad E.D.A. 9.0.7		Id: 1/2

MCU_SHEET

MCU CIRCUIT

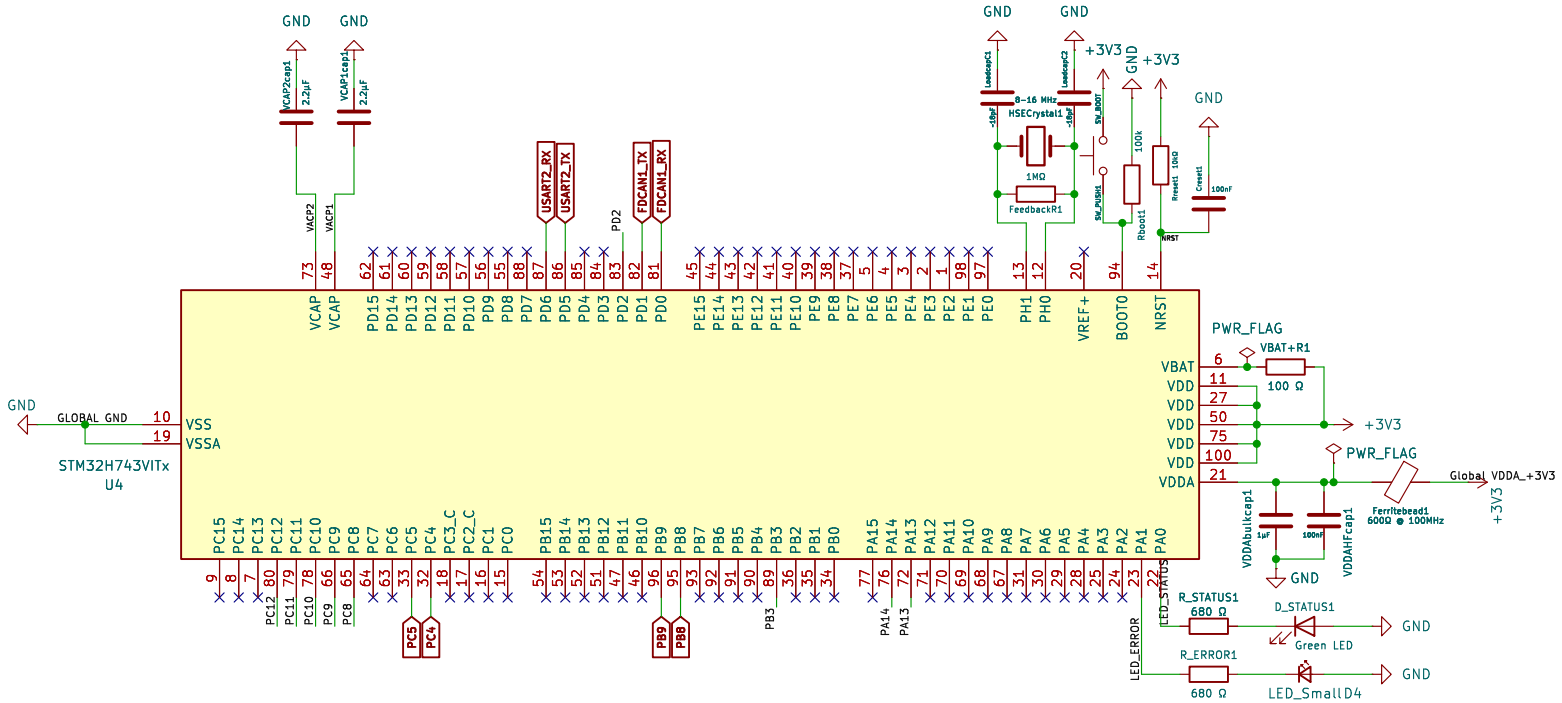

VDD Decoupling

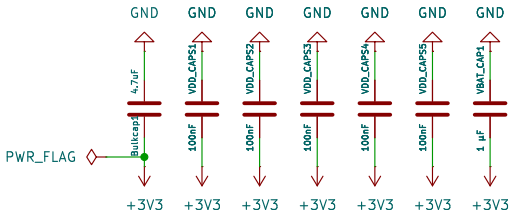

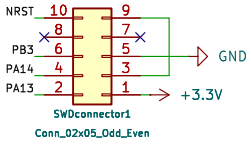

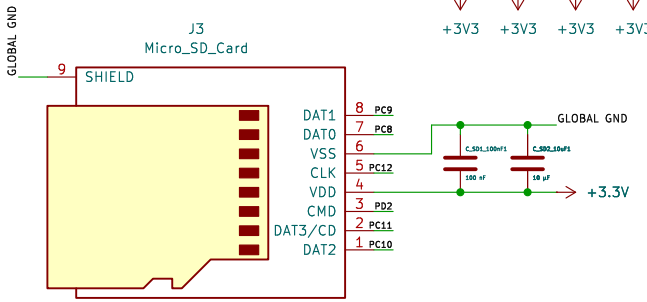

Sheet: /MCU_SHEET/		
File: MCU_SHEET.kicad_sch		
Title:		
Size: A4	Date:	**Rev:**
KiCad E.D.A. 9.0.7		Id: 2/2