ACKNOWLEDGEMENT

It is my great pleasure to present the honor and sincere gratitude to my guide Mrs.S.O.Kamat Lecturer, Dept. of AIML. Sharad instate of Technology, Polytechnic, Yadrav helps in joining the hands in developing each and every steps of this project and for valuable guidance and constant encouragement during completion of project work. It was my privilege and pleasure to work under his val guidance. I am indeed gratefully to him for providing me helpful con. Due to his constant encouragement andinspiration I could complete my project work.

I am very thankful to Principal, Sharad Institute of Technology, Polytechnic, Yadrav.

My grateful thanks to Mrs. A. B. Bedkyale Head of AIML Department,for their valuable guidance, support and constant encouragement.

I express thanks to my family and friends for their support and encouragement at every stage of successful completion of this project work.

My sincere thanks to all those who have directly or indirectly helped me to carry out this work.

Sr .no	Member name	Roll no
1	Virdhaval Babaso khot	24050
2	Samarth Santosh Kshirsagar	24052
3	Vedant Rupesh Nagvekar	24057

Report On ASK and FSK Using Protues Simulator

1.Rationale:-

- Understanding Modulation – Helps visualize how digital data modulates a carrier signal.
- Bridging Theory & Practice – Verifies theoretical concepts with practical simulation.
- Cost-Effective & Time-Saving – No need for physical components; all done in software.
- Real-Time Waveform Analysis – Uses oscilloscopes and analyzers to study signal behavior.
- Flexible Experimentation – Adjusts carrier frequency, data rate, and modulation settings easily.
- Enhances DSP Learning – Aids in understanding signal processing concepts like modulation and filtering.

2. Course Outcome (CO) –

- Understanding Digital Communication Techniques.
- Application of Simulation Tools.
- Signal Analysis and Interpretation
- Practical Implementation of Modulation
- Performance Evaluation of Modulation Schemes
- Problem-Solving in Communication Systems

3. Literature Review:-

ASK and FSK are key modulation techniques in data communication, enabling efficient binary data transmission. ASK varies signal amplitude, while FSK shifts frequencies to represent digital data. These methods are widely used in networking, modems, and wireless communication.

Proteus simulator provides a cost-effective and interactive way to visualize and analyse ASK and FSK waveforms, helping students and researchers understand signal behaviour before real-world implementation. It enhances learning by offering real-time simulation tools like oscilloscopes and signal generators.

4. Actual Methodology Followed:-

- Problem Definition We collected information.
- Literature Review.

- Selection of Tools & Components.
- Circuit Design in Proteus.
- Implementation of ASK Modulation.
- Implementation of FSK Modulation.
- Waveform Observation using Oscilloscope.
- Comparison of ASK and FSK Signals
- Analysis of Results

5. Resources Required:-

Sr.no	Name of Resources	Specification
1)	ComputerSystem	Processor:- Intel core i5,RAM:- 8 GB Operating System:- Windows11.
2)	Software	Oracle,MS WORLD

6. Techniques:-

a) Carrier Signal Generation :-

Explanation:

A **carrier signal** is a high-frequency wave that carries the digital information (0s and **1s).** In Proteus, we use a **555 Timer IC** in **a stable mode** to generate this continuous signal.

Example:-

- The 555 Timer circuit is set with specific resistor and capacitor values to produce a fixed high-frequency output.
- The generated carrier wave remains constant in frequency for ASK and is switched between two frequencies for FSK.

Diagram:-

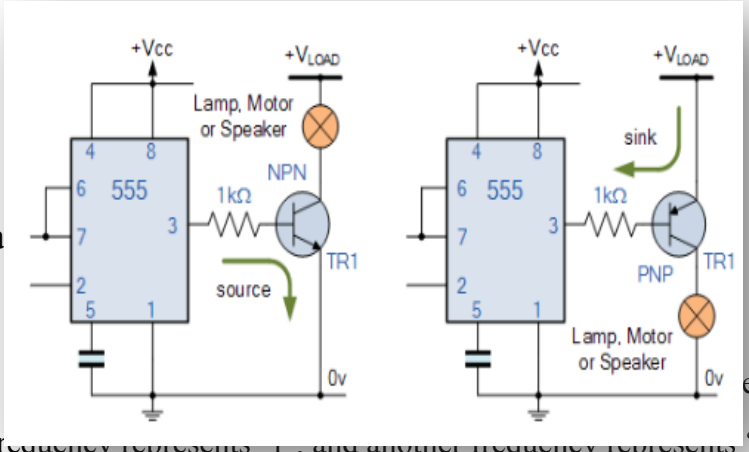

b) **Binary Data**

Explanation:-

In FSK, the efined values based on binary input. One fr ‘0’.

Example:-

- Binary 1 → High frequency (f1)
- Binary 0 → Low frequency (f2)
- Used in Bluetooth, wireless modems, and GSM communication.

Diagram:-

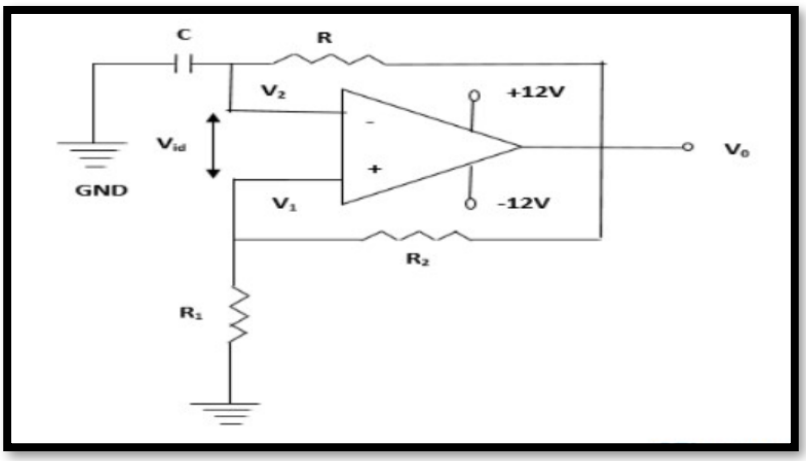

c) Amplitude Modulation (ASK)

Explanation:-

In ASK, the amplitude of the carrier wave is changed based on input binary data. When binary ‘1’ is present, the carrier signal is fully transmitted; when binary ‘0’ is present, the signal is suppressed or reduced.

_Example:-

- Binary 1 → Full carrier amplitude
- Binary 0 → Low or no amplitude

- This is commonly used in **optical fiber communication** and **RFID systems**

Diagram:-

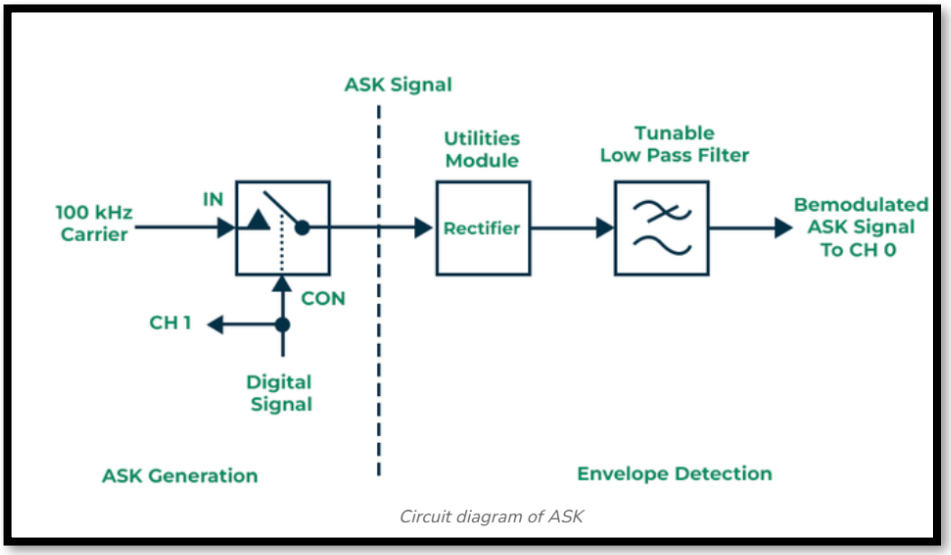

d) Frequency Modulation (FSK)

Explanation:-

In FSK, the frequency of the carrier wave is shifted between two predefined values based on binary input**.** One frequency represents '1', and another frequency represents '0'.

Example:-

- Binary 1 → High frequency **(f1)**
- Binary 0 → Low frequency **(f2)**
- Used in **Bluetooth, wireless modems, and GSM communication.**

Diagram:-

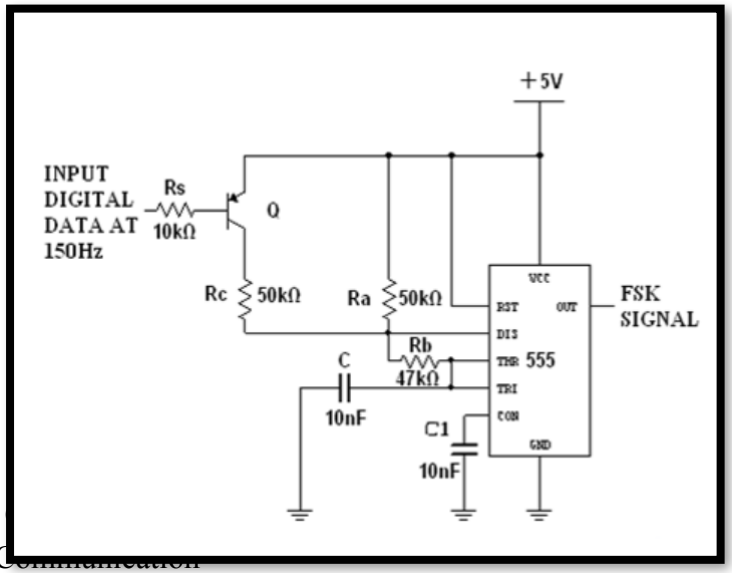

7. Applications

- Wireless
- Modem Communication
- Optical Fiber Communication
- Remote Control Systems
- Data Transmission in Embedded Systems
- Satellite and Space Communication
- Industrial Automation
- Military and Secure Communication
- Biomedical Applications
- **IoT and Smart Devices**

8. Skill Developed / Learning Outcome: -

- Understanding Digital Modulation.
- Circuit Design and Simulation.
- Waveform Analysis.
- Use of Proteus Tools
- Problem-Solving & Debugging and Comparison of ASK and FSK

9. Benefits:-

- Cost-Effective Learning
- Real-Time Waveform Analysis
- Error Detection & Debugging
- Flexible Experimentation
- Practical Understanding Systems

10.Future Improvement: -

- Integration with Microcontrollers
- Noise & Interference Analysis

11.Conclusion:-

The simulation of **ASK and FSK** using **Proteus** provides a clear understanding of **digital modulation techniques** used in data communication. By designing and analyzing waveforms in a **virtual environment,** learners can effectively visualize signal behavior, compare modulation methods, and debug circuits without requiring physical hardware. This study enhances practical knowledge of **wireless communication, networking, and embedded systems**, making it a valuable tool for academic and research purposes

12.References: -

1. https://www.javatpoint.com

2. https://www.github.com

3. https://www.geeksforgeeks.org