CONTROLS			INDICATIONS		
NV PRGM	OFFICE	CONTROL	NV PRGM	OFFICE	INDICATION
C0001	C1	CNWZ	I0001	I1	NWK
C0002	C2	CRWZ	I0002	I2	RWK
C0003	C3	CFGZ	I0003	I3	LK
C0004	C4	CTGZ	I0004	I4	OLK
C0005	C5	CFCOZ	I0005	I5	FACPK
C0006	C6	CTCOZ	I0006	I6	FGK
C0007	C7		I0007	I7	FASK
C0008	C8	CSIGSTOPZ	I0008	I8	FLOK
C0009	C9	CSMONZ	I0009	I9	
C0010	C10	CSMOFFZ	I0010	I10	TMGK
C0011	C11		I0011	I11	TASK
C0012	C12		I0012	I12	TMLOK
C0013	C13		I0013	I13	TMASK
C0014	C14		I0014	I14	TSGK
C0015	C15		I0015	I15	
C0016	C16		I0016	I16	TSLOK
C0017	C17		I0017	I17	TSASK
C0018	C18		I0018	I18	OSTK
C0019	C19		I0019	I19	FTK
C0020	C20		I0020	I20	FATK
C0021	C21		I0021	I21	FAUXK
C0022	C22		I0022	I22	
C0023	C23		I0023	I23	
C0024	C24		I0024	I24	FCOK
C0025	C25		I0025	I25	FRTTK
C0026	C26		I0026	I26	TMTK
C0027	C27		I0027	I27	TMATK
C0028	C28		I0028	I28	TMAUXK
C0029	C29		I0029	I29	
C0030	C30		I0030	I30	
C0031	C31		I0031	I31	TMCOK
C0032	C32		I0032	I32	TMRTTK
C0033	C33		I0033	I33	TSTK
C0034	C34		I0034	I34	TSATK
C0035	C35		I0035	I35	TSAUXK
C0036	C36		I0036	I36	
C0037	C37		I0037	I37	
C0038	C38		I0038	I38	TSCOK
C0039	C39		I0039	I39	TSRTTK
C0040	C40		I0040	I40	SMK
C0041	C41		I0041	I41	POKP
C0042	C42		I0042	I42	DOOROPENK
C0043	C43		I0043	I43	HTEMPK
C0044	C44		I0044	I44	GENK
C0045	C45		I0045	I45	EQUIPFAILK
C0046	C46		I0046	I46	LOCALK
C0047	C47		I0047	I47	FCK
C0048	C48		I0048	I48	TSTRAFFIC

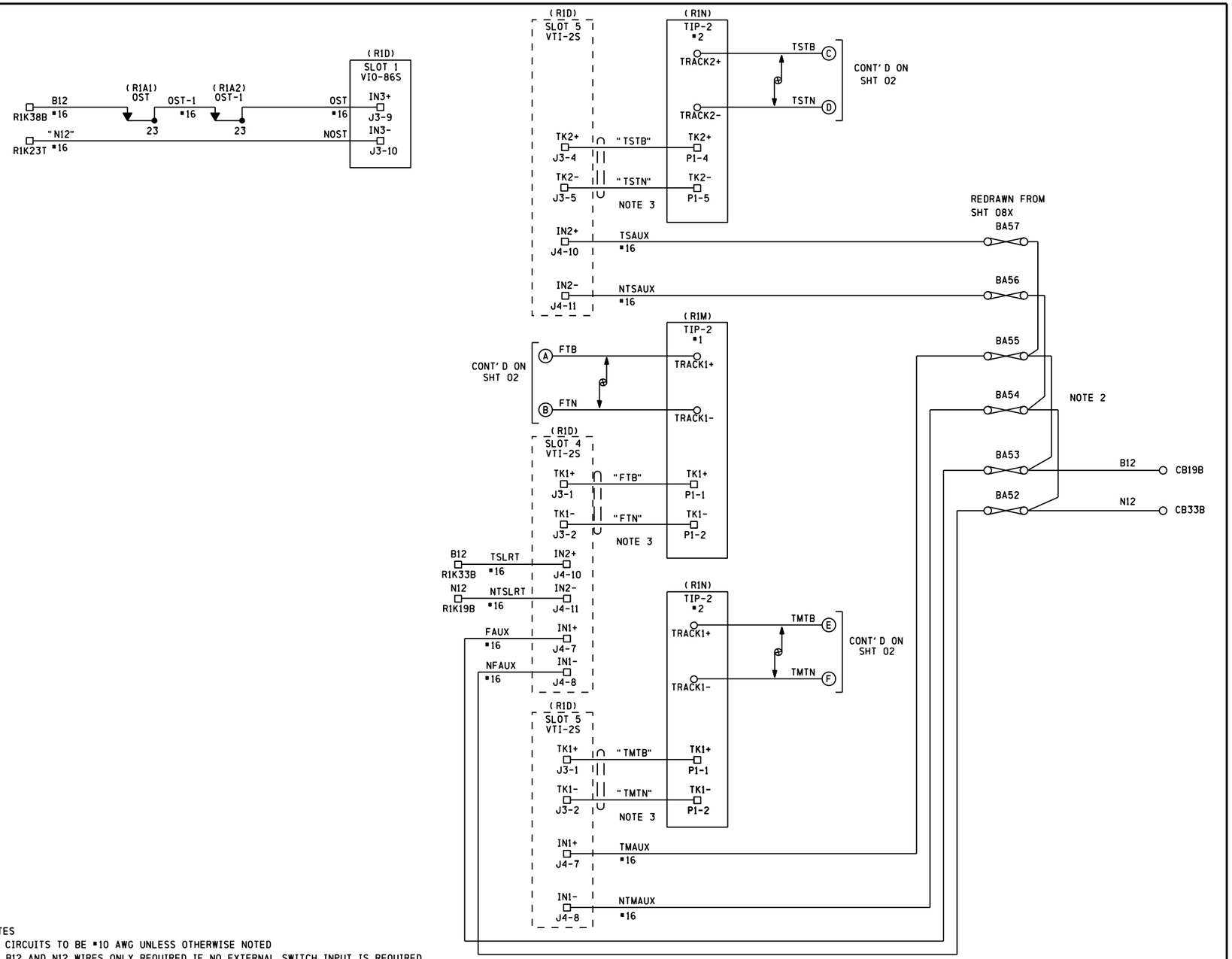

NOTES
1) CIRCUITS TO BE #10 AWG UNLESS OTHERWISE NOTED
2) B12 AND N12 WIRES ONLY REQUIRED IF NO EXTERNAL SWITCH INPUT IS REQUIRED
3) 8' TIP-2 CABLE HPN 814-096000-017

-DENOTES TWISTED PAIR

" " -DENOTES REFERENCE, NOT WIRE TAG

PROPOSED D	M	Y	REVISIONS	D	C	COMPLETED D	M	Y	C
			AS WIRED			25	03	13	RL
19	08	14	PTC UPGRADE	BEH	MAB	05	09	18	MJK

REGION SOUTHERN
SUB. CAIRO 343

SIGNALS AND COMMUNICATIONS HOMEWOOD
15 JANUARY 2013
DES. RL
CH. GGS

CI CHART
TRACK CIRCUITS

NORTH BUDA

CAI-402.61-06

cai-402.61-06.dgn
06-FEB-2019 13:46