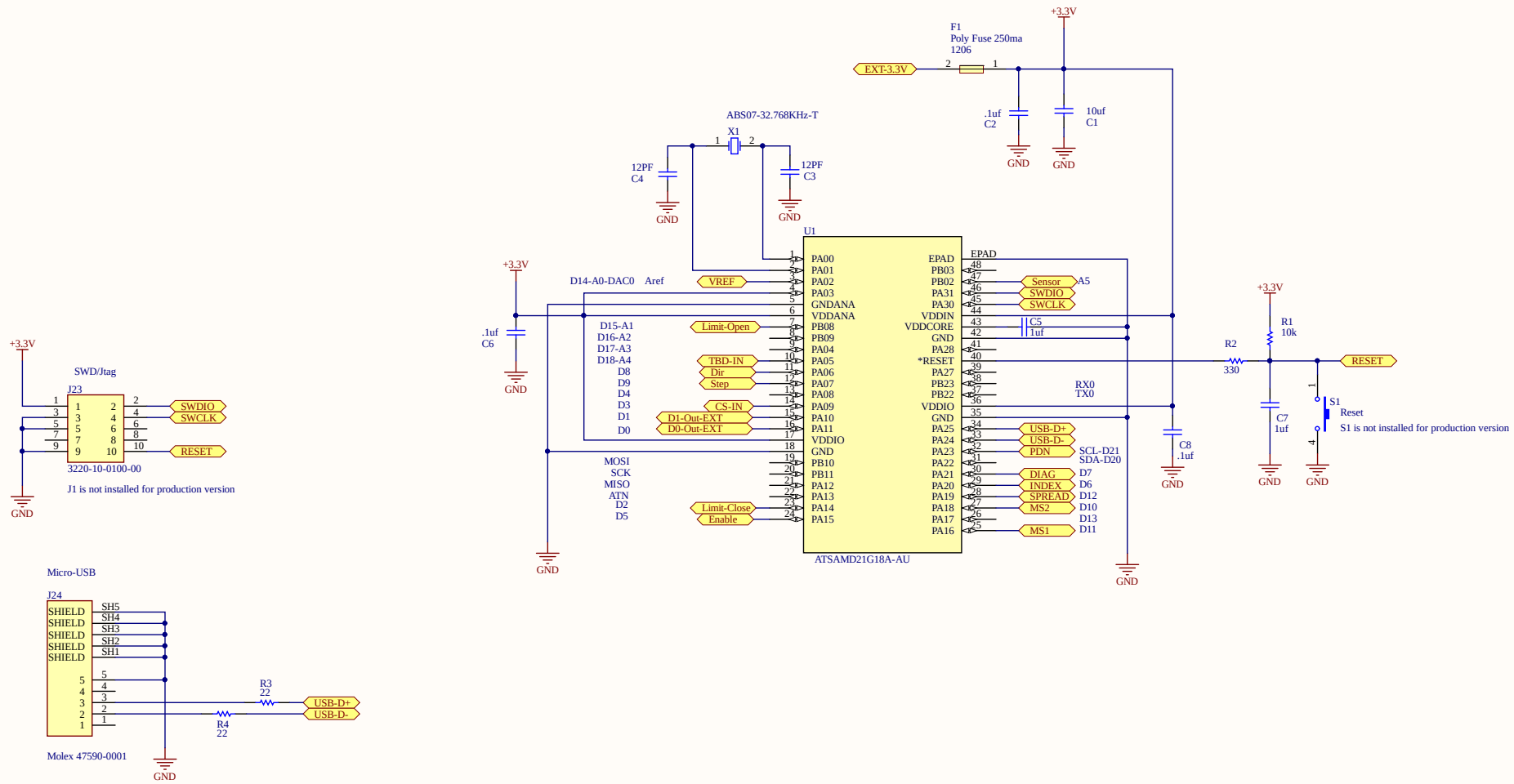

Title	***PANO-SETI Shutter, Processor***		*Lafleur Designs* *Tom Lafleur* *tom@lafleur.us* * *
Size: B	Number:	Revision: 3E	
Date: 10/27/2021	Time: 10:49:40 AM	Sheet 1 of	
File: C:\Users\lafleur\Desktop\Altium Projects\Seti-Controller3E2\Sheet1.SchDoc			

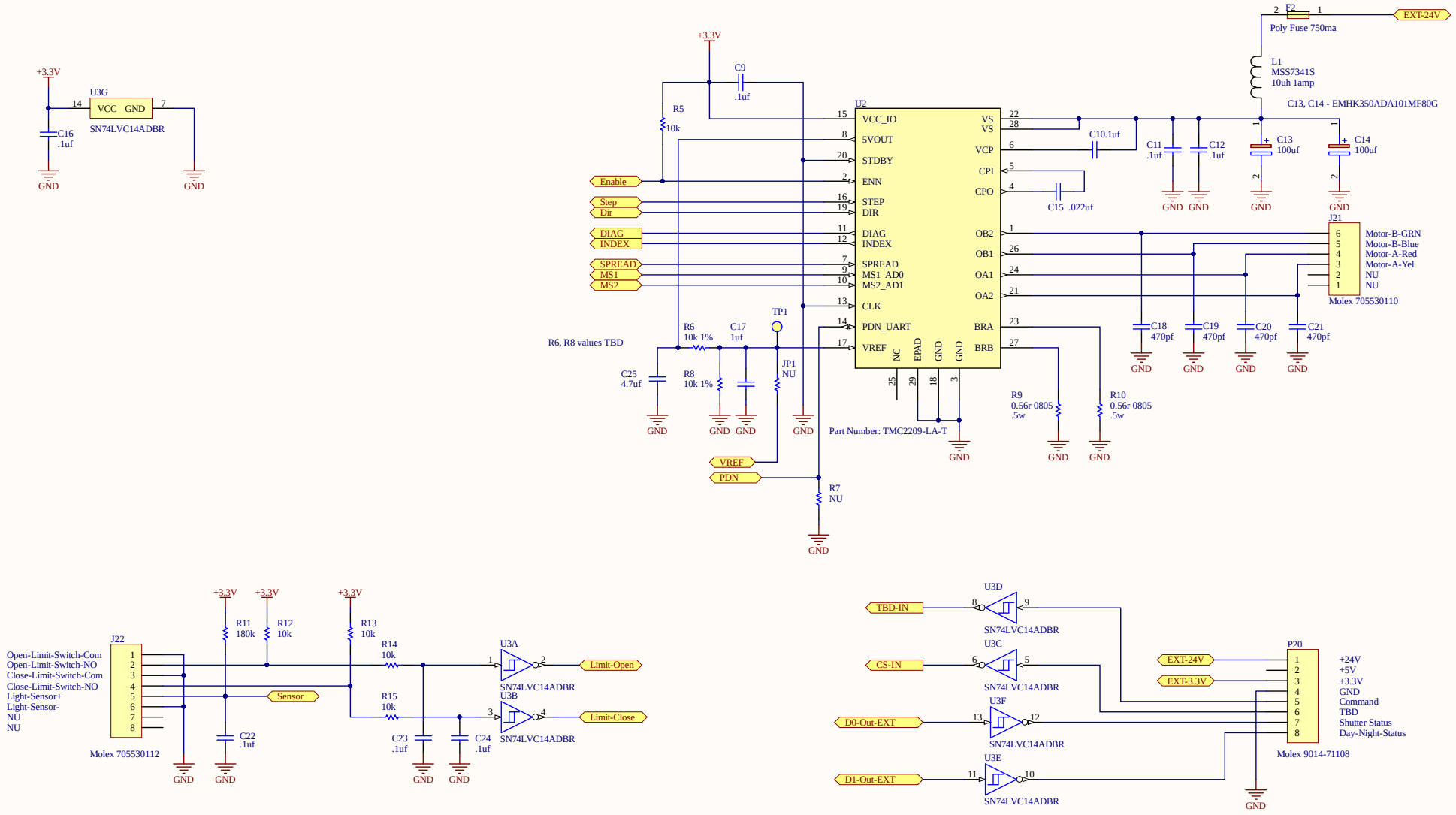

Title	PANO-SETI Shutter, Stepper Driver		Lafleur Designs Tom Lafleur tom@lafleur.us
Size: B	Number:	Revision: 3E	
Date: 10/27/2021	Time: 10:49:41 AM	Sheet 2 of	
File: C:\Users\lafleur\Desktop\Altium Projects\Seti-Controller3E2\Sheet2.SchDoc			

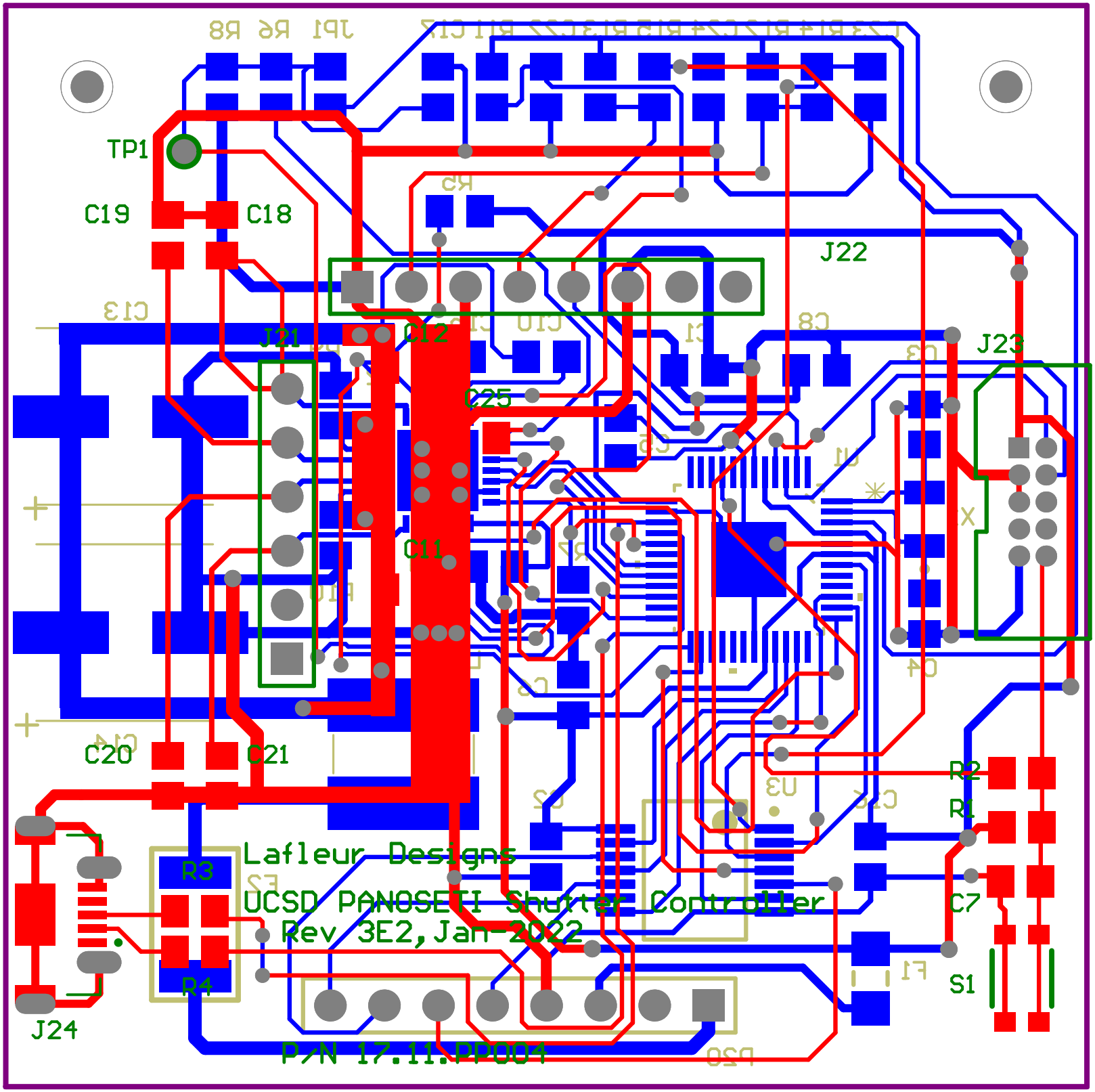
TP1
C19
C18
J22
J21
C12
J23
C25
C11
C20
C21
R2
R1
C7
S1
R3
R4
J24
Lafleur Designs
UCSD PANOSETI Shutter Controller
Rev 3E2, Jan-2022
P/N 17.11.PP004