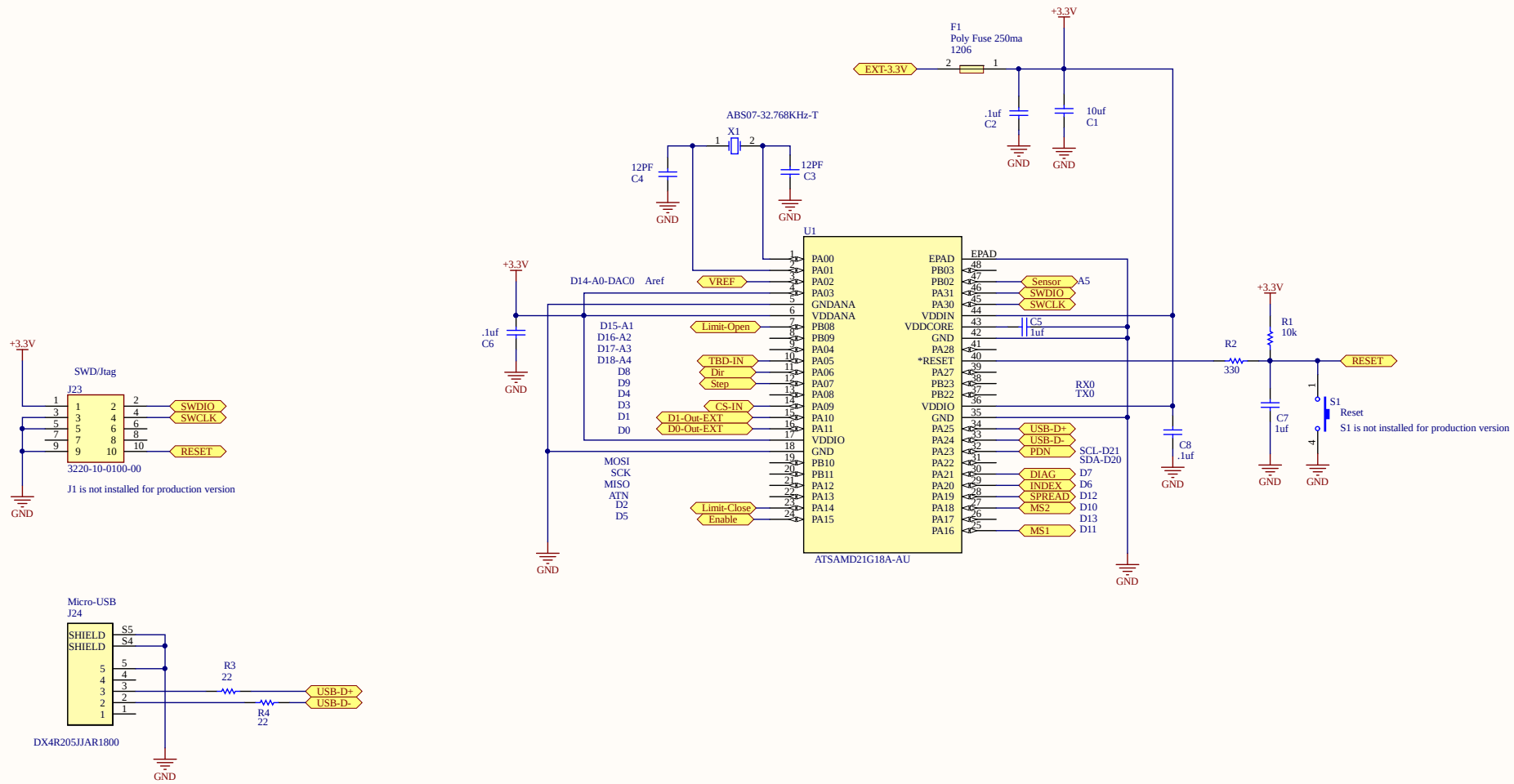

Title	***PANO-SETI Shutter, Processor***		*Lafleur Designs* *Tom Lafleur* *tom@lafleur.us* * *
Size: B	Number:	Revision: 3c	
Date: 7/19/2020	Time: 6:41:26 AM	Sheet1 of	
File: C:\Users\lafleur\Desktop\Altium Projects\Seti-Controller3C\Sheet1.SchDoc			

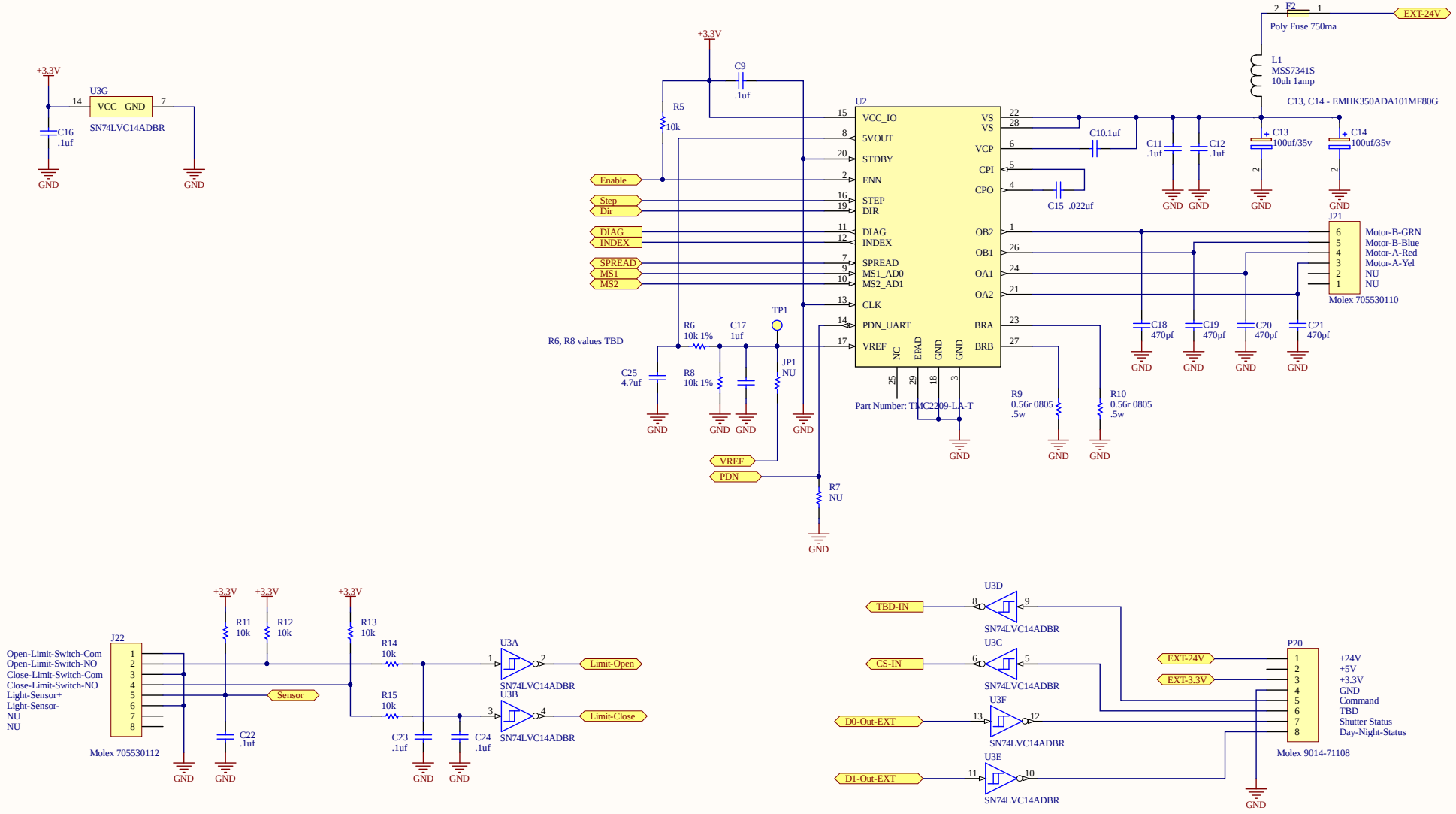

Title	***PANO-SETI Shutter, Stepper Driver***		*Lafleur Designs* *Tom Lafleur* *tom@lafleur.us* * *
Size: B	Number:	Revision: 3c	
Date: 7/19/2020	Time: 6:41:26 AM	Sheet 2 of	
File: C:\Users\lafleur\Desktop\Altium Projects\Seti-Controller3C\Sheet2.SchDoc			

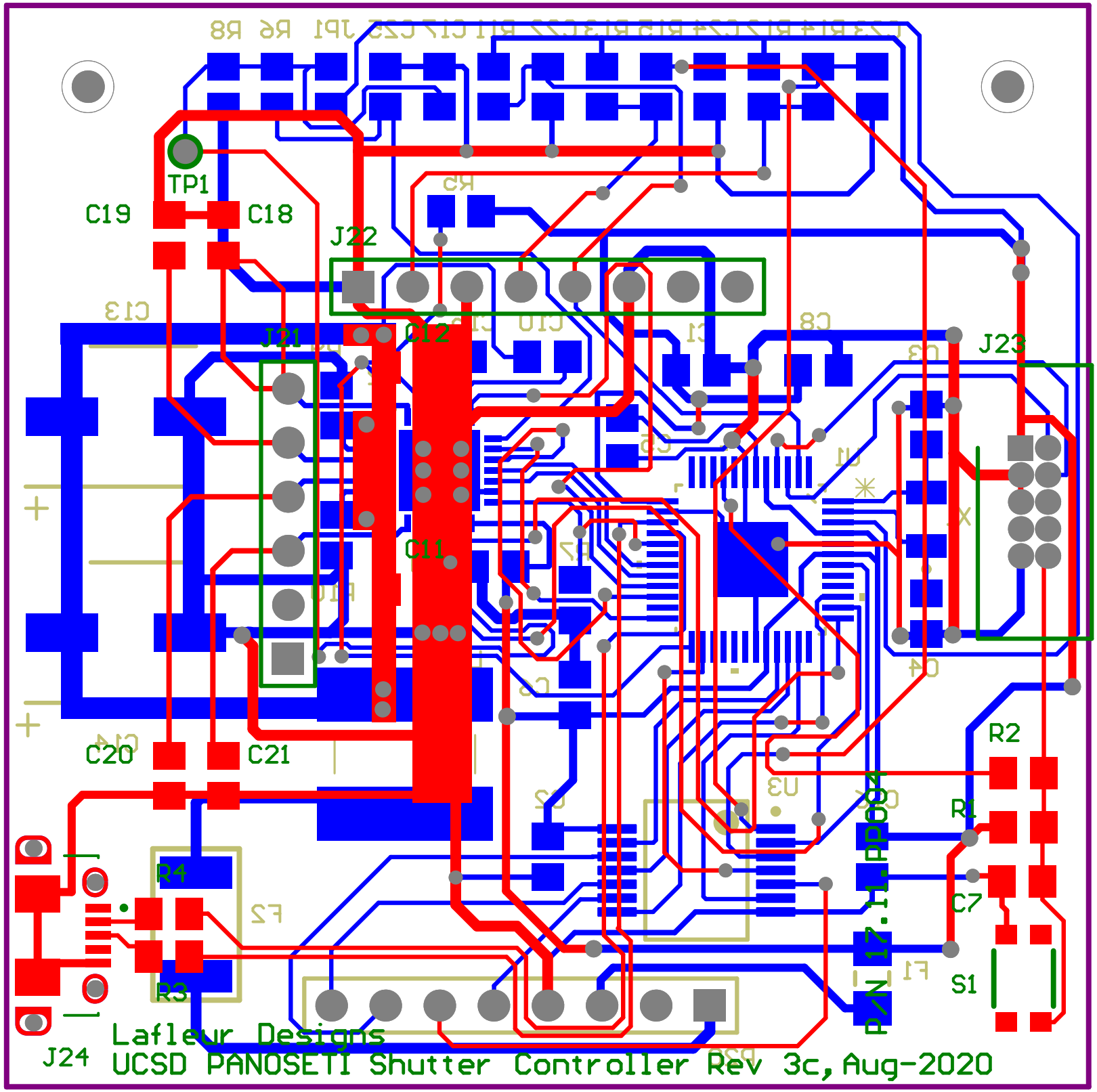
TP1
C19
C18
J22
J21
C12
C11
J23
C20
C21
R2
R1
C7
S1
R4
R3
J24
Lafleur Designs
UCSD PANOSETI Shutter Controller Rev 3c, Aug-2020