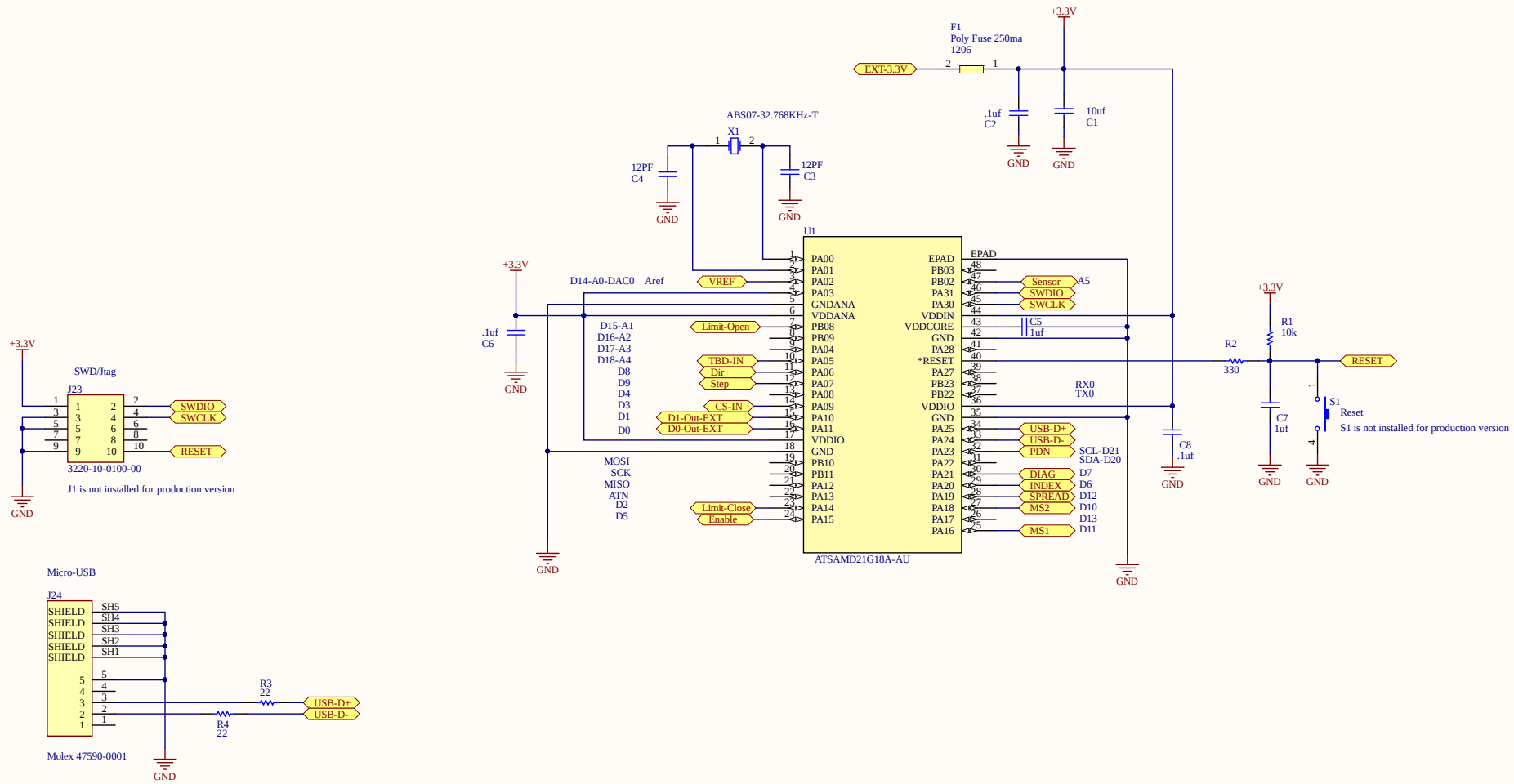

Title	***PANO-SETI Shutter, Processor***		*Lafleur Designs* *Tom Lafleur* *tom@lafleur.us* * *
Size: B	Number:	Revision: 3E	
Date: 9/1/2021	Time: 4:53:28 PM	Sheet 1 of	
File: C:\Users\lafleur\Desktop\Altium Projects\Seti-Controller3E\Sheet1.SchDoc			

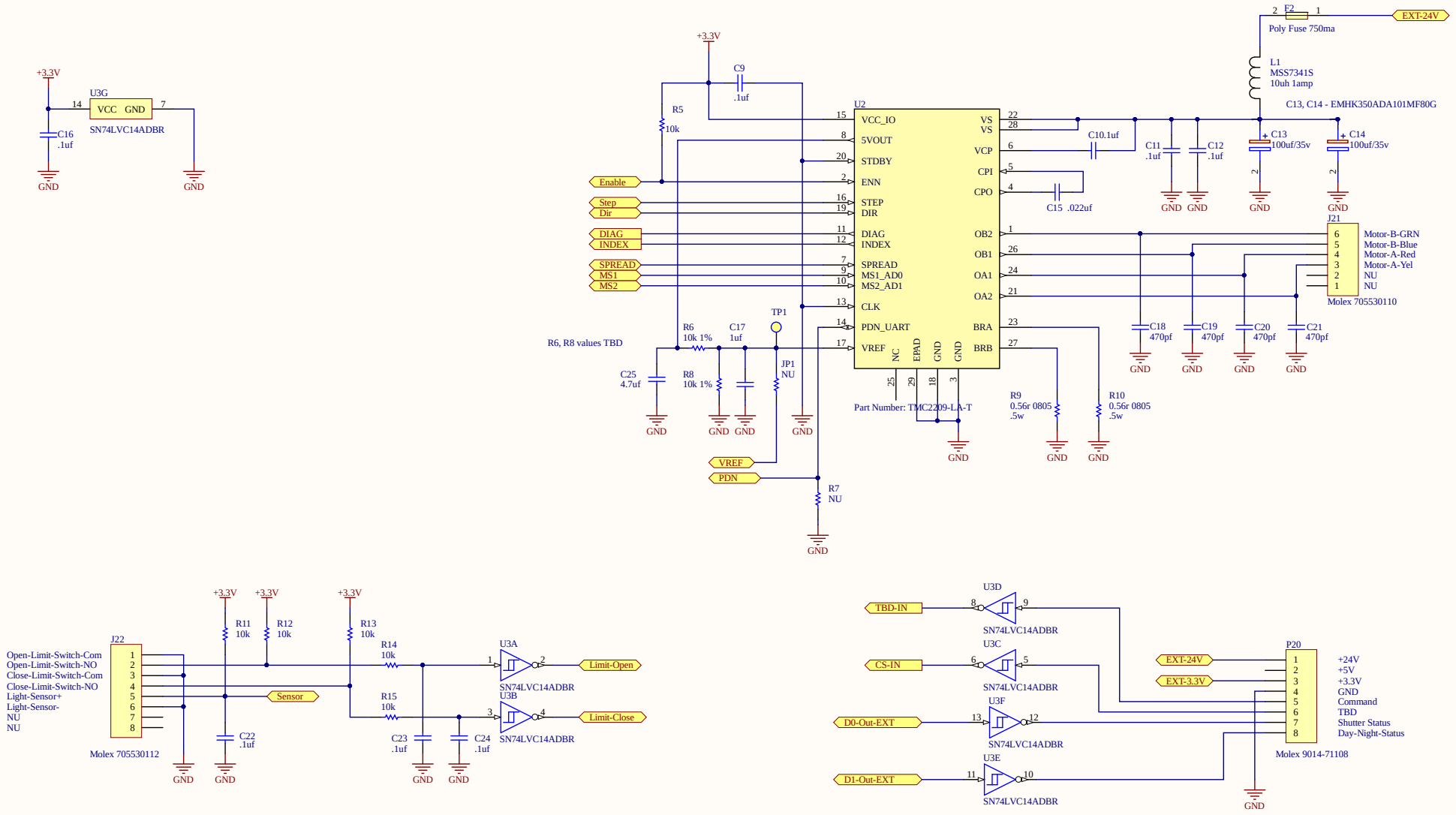
+3.3V
U3G
VCC GND
SN74LVC14ADBR
C16 .1uf
GND
C9 .1uf
R5 10k
U2
VCC_IO
5VOUT
STDBY
ENN
STEP
DIR
DIAG
INDEX
SPREAD
MS1_AD0
MS2_AD1
CLK
PDN_UART
VREF
VS
VCP
CPI
CPO
OB2
OB1
OA1
OA2
BRA
BRB
NC
EPAD
Part Number: TMC2209-LA-T
Enable
Step
Dir
DIAG
INDEX
SPREAD
MS1
MS2
R6, R8 values TBD
R6 10k 1%
C17 1uf
TP1
C25 4.7uf
R8 10k 1%
JP1 NU
VREF
PDN
R7 NU
F2 Poly Fuse 750ma
EXT-24V
L1 MSS7341S 10uh 1amp
C13, C14 - EMHK350ADA101MF80G
C10.1uf
C11 .1uf
C12 .1uf
C13 100uf/35v
C14 100uf/35v
C15 .022uf
J21
Motor-B-GRN
Motor-B-Blue
Motor-A-Red
Motor-A-Yel
NU
NU
Molex 705530110
C18 470pf
C19 470pf
C20 470pf
C21 470pf
R9 0.56r 0805 .5w
R10 0.56r 0805 .5w
J22
Open-Limit-Switch-Com
Open-Limit-Switch-NO
Close-Limit-Switch-Com
Close-Limit-Switch-NO
Light-Sensor+
Light-Sensor-
NU
NU
Molex 705530112
R11 10k
R12 10k
R13 10k
R14 10k
R15 10k
Sensor
C22 .1uf
C23 .1uf
C24 .1uf
U3A
U3B
SN74LVC14ADBR
Limit-Open
Limit-Close
U3D
TBD-IN
U3C
CS-IN
U3F
D0-Out-EXT
U3E
D1-Out-EXT
P20
+24V
+5V
+3.3V
GND
Command
TBD
Shutter Status
Day-Night-Status
Molex 9014-71108
Title PANO-SETI Shutter, Stepper Driver
Size: B
Number:
Revision: 3E
Date: 9/1/2021
Time: 4:53:28 PM
Sheet 2 of
File: C:\Users\lafleur\Desktop\Altium Projects\Seti-Controller3E\Sheet2.SchDoc
Lafleur Designs
Tom Lafleur
tom@lafleur.us
Altium

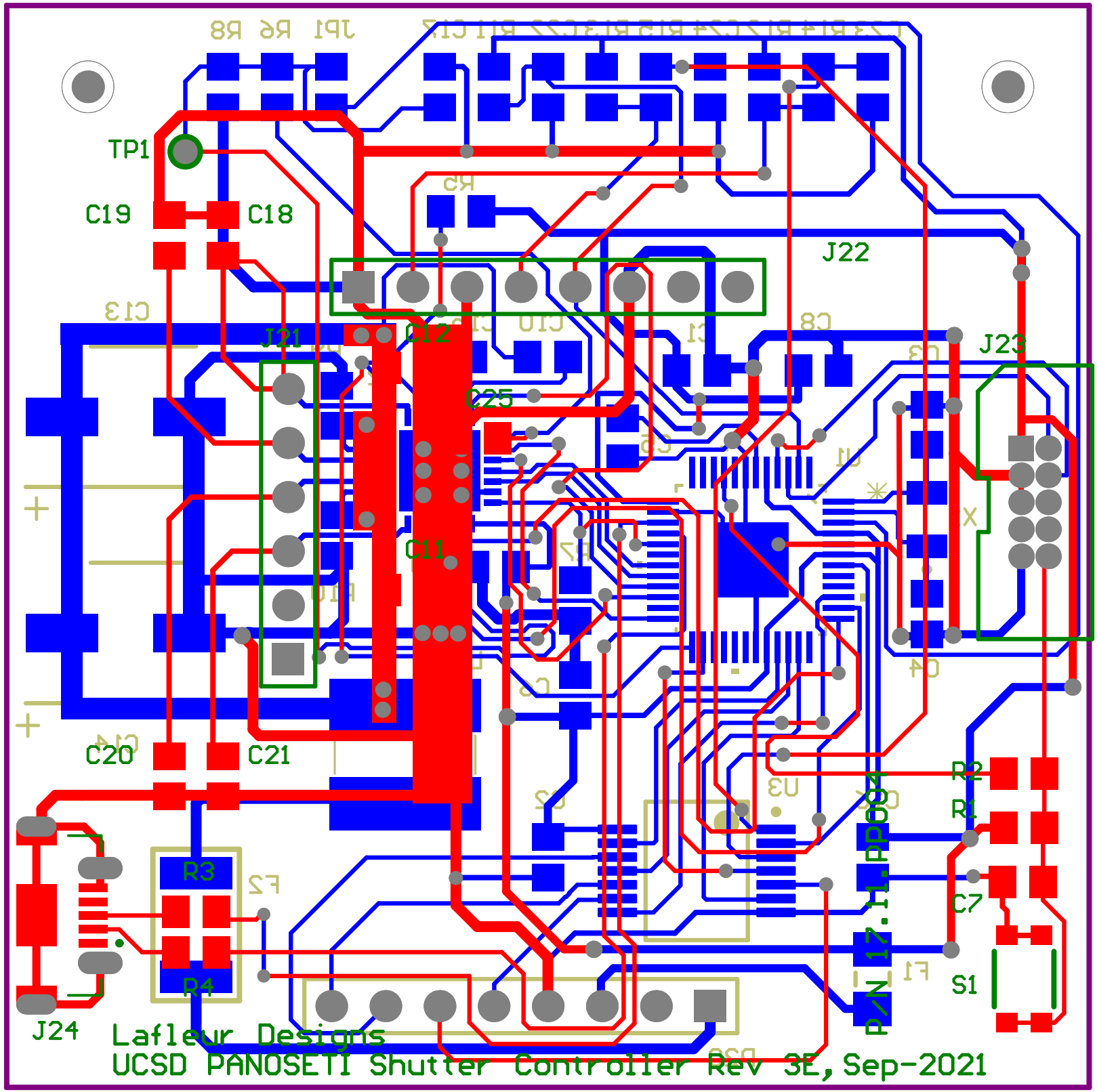
TP1
C19
C18
J22
J21
C12
J23
C25
C11
C20
C21
R2
R1
C7
R3
R4
S1
J24
Lafleur Designs
UCSD PANOSETI Shutter Controller Rev 3E, Sep-2021