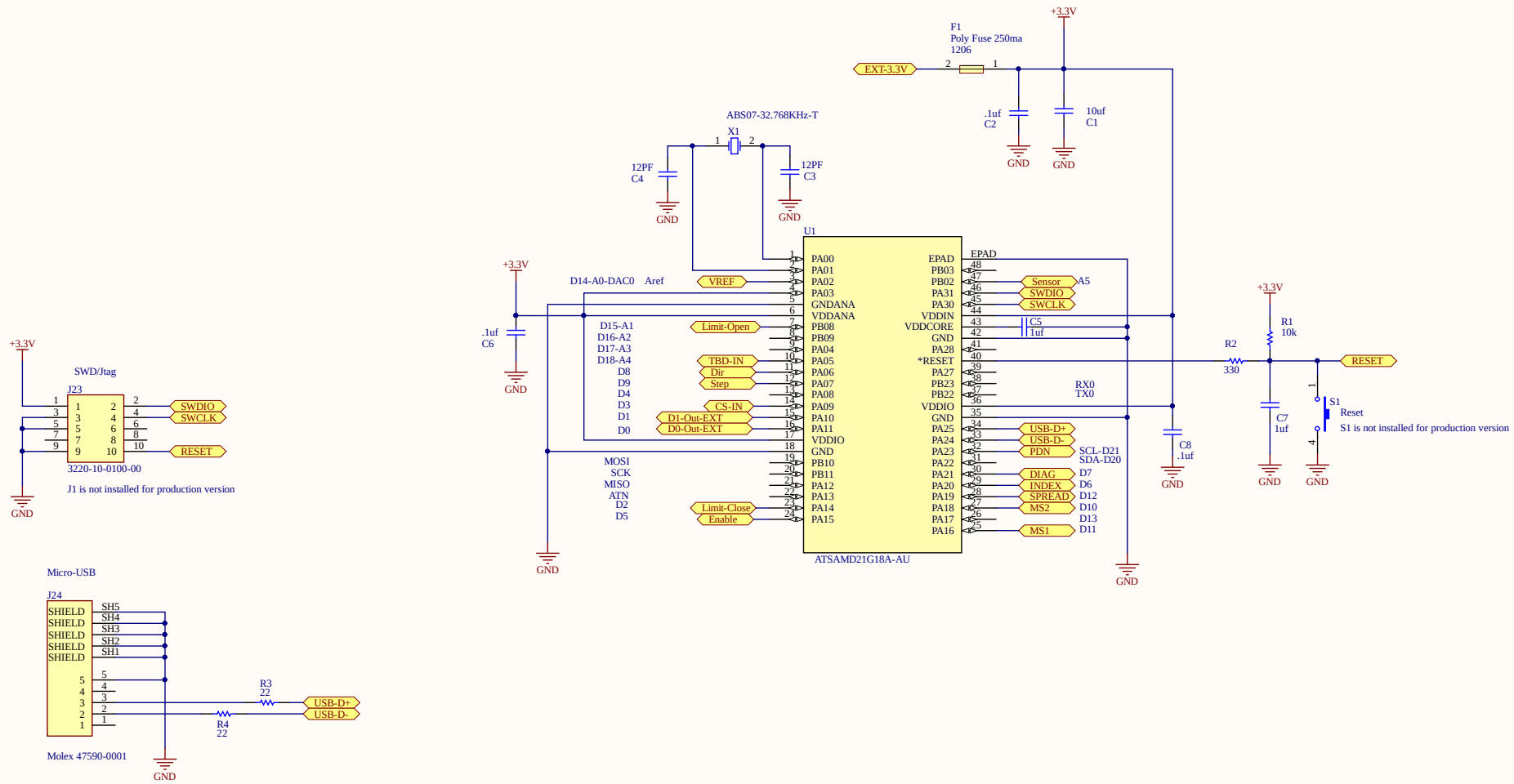

Title	***PANO-SETI Shutter, Processor***		*Lafleur Designs* *Tom Lafleur* *tom@lafleur.us* * *
Size: B	Number:	Revision: 3D	
Date: 8/30/2021	Time: 2:18:08 PM	Sheet 1 of	
File: C:\Users\lafleur\Desktop\Altium Projects\Seti-Controller3D\Sheet1.SchDoc			

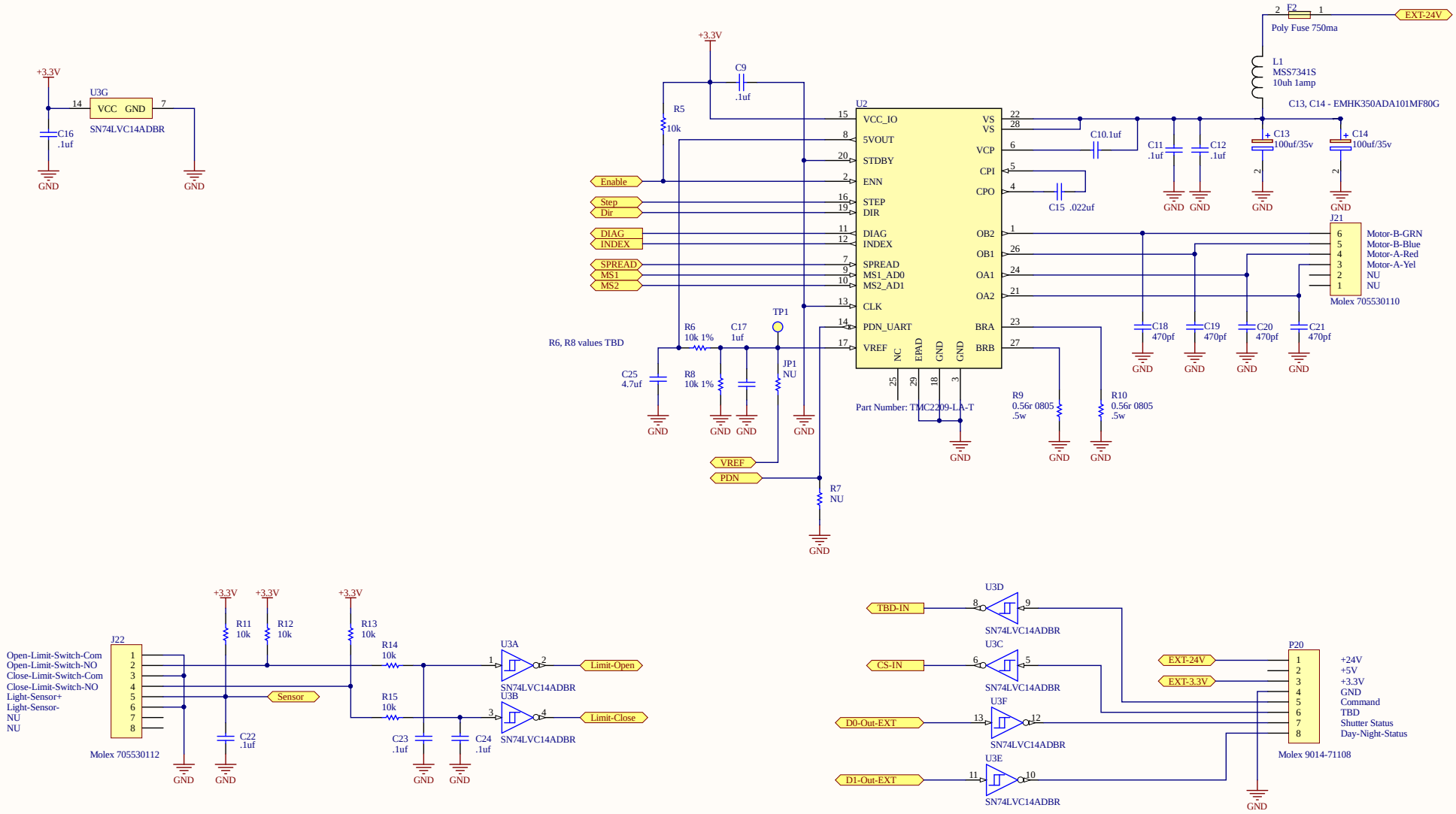

Title	***PANO-SETI Shutter, Stepper Driver***		*Lafleur Designs* *Tom Lafleur* *tom@lafleur.us* * *
Size: B	Number:	Revision: 3D	
Date: 8/30/2021	Time: 2:18:08 PM	Sheet 2 of	
File: C:\Users\lafleur\Desktop\Altium Projects\Seti-Controller3D\Sheet2.SchDoc			

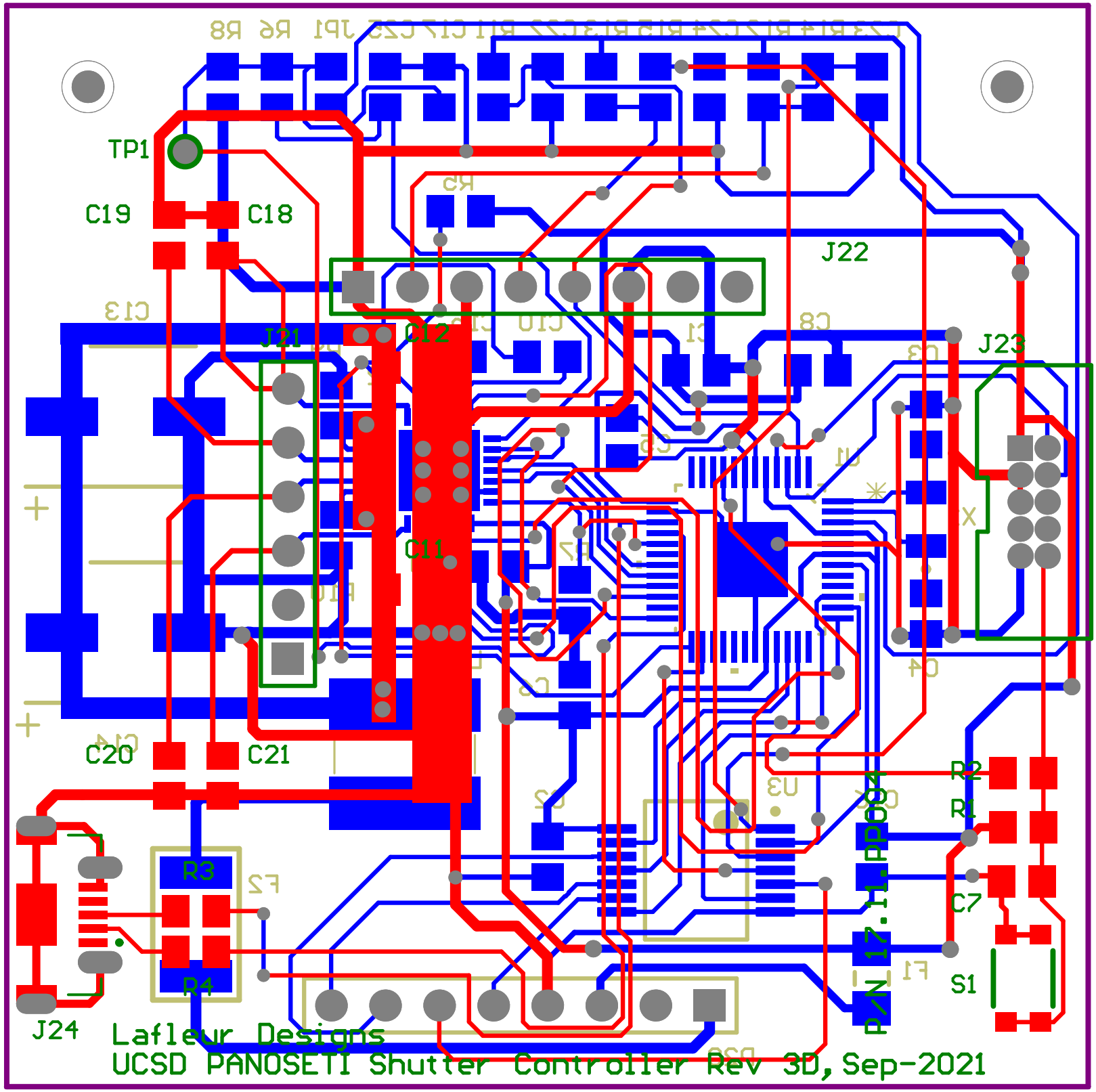
TP1
C19
C18
J22
J21
C12
J23
C11
C20
C21
R2
R1
C7
R3
R4
S1
J24
Lafleur Designs
UCSD PANOSETI Shutter Controller Rev 3D, Sep-2021