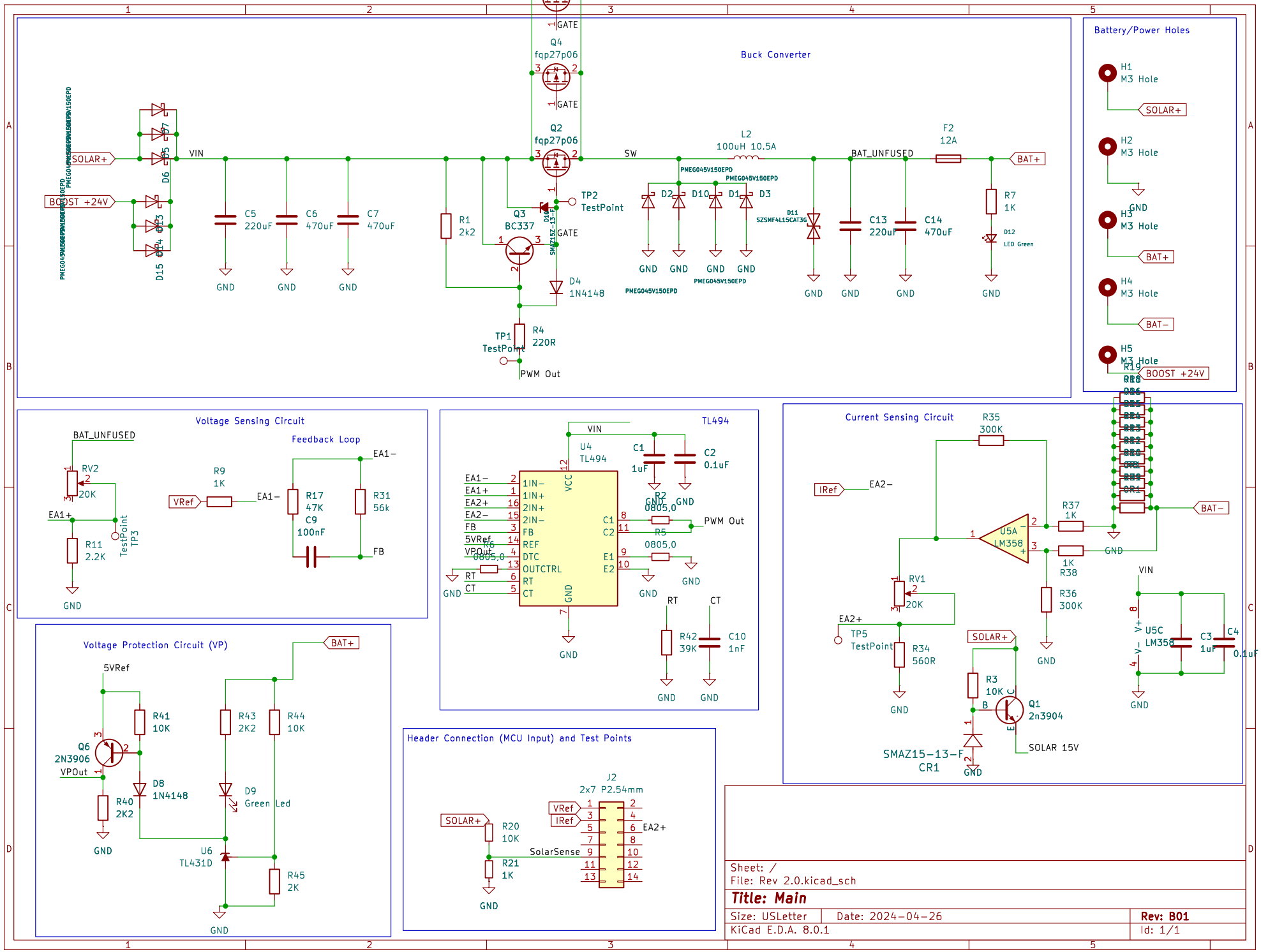

Sheet: /
File: Rev 2.0.kicad_sch

Title: Main

Size: USLetter	Date: 2024-04-26	Rev: B01
KiCad E.D.A. 8.0.1		Id: 1/1