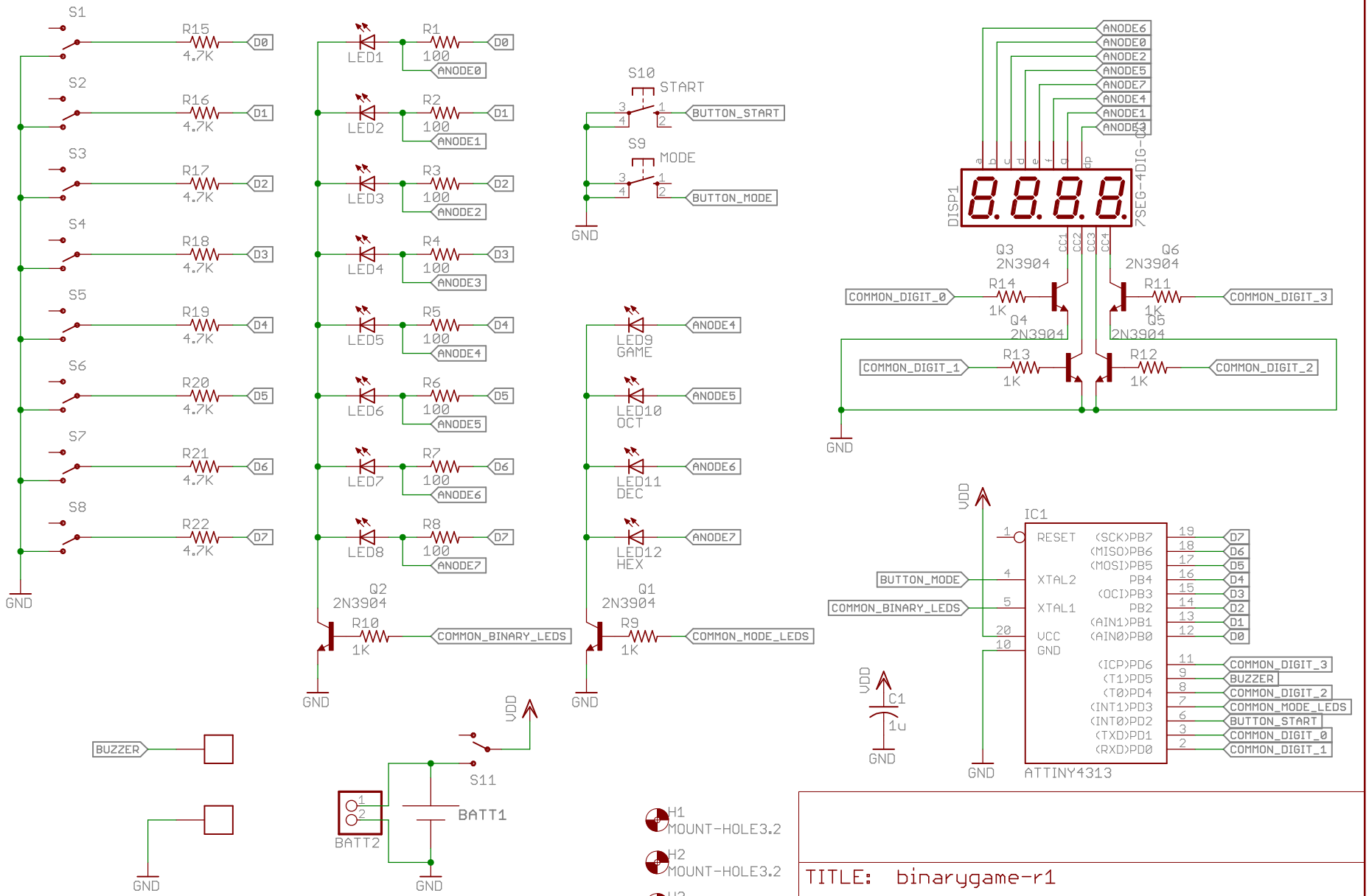

Copyright Randy Glenn 2018. Licensed under CERN OHL V1.2
You may redistribute and modify this documentation under the terms of the CERN OHL v.1.2. (http://ohwr.org/cernohl). This documentation is distributed WITHOUT ANY EXPRESS OR IMPLIED WARRANTY, INCLUDING OF MERCHANTABILITY, SATISFACTORY QUALITY AND FITNESS FOR A PARTICULAR PURPOSE. Please see the CERN OHL v.1.2 for applicable conditions

TITLE: binarygame-r1

Document Number:

REV:

Date: 1/22/2018 11:44:46 PM

Sheet: 1/1