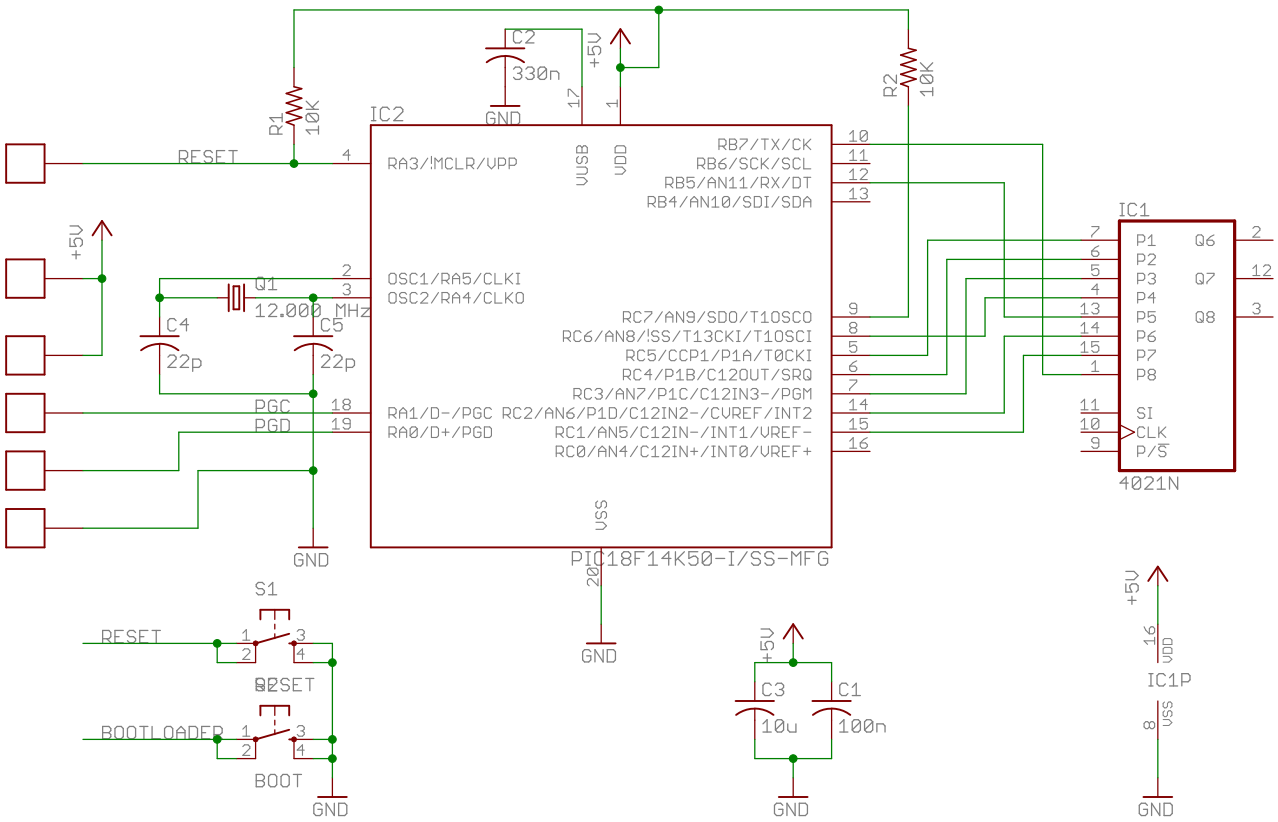

Copyright Randy Glenn 2013.
Licensed under CERN OHL v1.1

You may redistribute and modify this documentation under the terms of the CERN OHL v.1.1. (http://ohwr.org/cernohl). This documentation is distributed WITHOUT ANY EXPRESS OR IMPLIED WARRANTY, INCLUDING OF MERCHANTABILITY, SATISFACTORY QUALITY AND FITNESS FOR A PARTICULAR PURPOSE.
Please see the CERN OHL v.1.1 for applicable conditions

NES Controller USB Converter

TITLE: NESverter-R1

Document Number:

REV: 1

Date: 2013-06-09 1:27

Sheet: 1/1