2023 IEEE International Conference on Multimedia and Expo (ICME) | 978-1-6654-6891-6/23/$31.00 ©2023 IEEE | DOI: 10.1109/ICME55011.2023.00361

Graph Convolutional GRU for Music-Oriented Dance Choreography Generation

Yuxin Hou
Harbin institute of technology
Harbin, China
YuxinHou_054@outlook.com

Hongxun Yao*
Harbin institute of technology
Harbin, China
h.yao@hit.edu.cn

Haoran Li
Harbin institute of technology
Harbin, China
haoran_li@hit.edu.cn

***Abstract*—Music-oriented dance choreography is a complex art form that requires consideration of various factors in music understanding and physical aesthetics. In addition, learning model to generate dance sequences automatically needs to overcome not only the challenges from choreography but also the complexity of human skeleton structure. In this paper, we propose a graph convolutional GRU (GraphGRU) model for music-oriented dance choreography by integrating the graph convolutional networks into the gated recurrent unit. The GraphGRU can model the spatial relationship among the human skeleton joints and the temporal relationship of the dancing sequences. Besides, we define multiple dance-driven kinematic graphs for GraphGRU and establish a path attention block to fuse the graph features. Moreover, we design a reverse-generation loss to ensure consistency between the generated dance and the music. Extensive experiments demonstrate that the proposed model GraphGRU can effectively solve the task of dance choreography.**

***Index Terms*—Dance choreography, graph convolutional network, action generation**

I. Introduction

In recent years, there has been an increasing interest in the research of human action generation. Common applications for human action generation include human-centric action video prediction [1]–[3] and action video generation with particular classe of human action [4]–[6]. Along with the development of cross-modal learning and generative networks, there has been growing interest in multi-modal action generation. TIPS [7] generates human action by transferring the source pose to the target pose that matches the given text description. Ginosar *et al.* [8] study the connection between conversational gesture and speech to generate human action video suitable for specific speech. SoulDancer [9] generates action videos with specific human emotions. Shlizerman *et al.* [10] generate pose sequences of piano or violin performance according to the given music audio.

With the development of social media and special effects creation, dancing performance, which is a special art form of human action and body movement, becomes a vital object in cross-modal human action generation research. In this paper, we tackle the task of dance choreography, which means dance movement generation according to the specific music. It's more complex and challenging than the conventional action generation tasks. On one hand, unlike ordinary human action, poses of dancing movements are of big diversity and complexity. On the other hand, the generated pose sequences must be appropriate to the music type, rhythm, speed, and even emotional expression of the given music.

Early works [11], [12] simplify the dance generation task into a similarity-based retrieval problem. In contrast to these retrieval models, recent generative models are able to produce creative and diverse dance clips. Tang *et al.* [13] adopt an LSTM-autoencoder approach to extract a mapping between acoustic and motion features. Lee *et al.* [14] propose a decomposition-to-composition framework to synthesize dance from music. Huang *et al.* [15] devise a novel seq2seq architecture for long-term dance generation by using the curriculum learning strategy. DeepDance [16] proposes a generative adversarial network based association model to correlate music and dance motion. Conformer [17] developed a conformer-based music-to-dance generation framework to capture local and global dependencies and reduce the effect of noisy data. There are also some works [18]–[21] devoted to the application of music-conditioned 3D dance generation.

However, existing methods in dance choreography use the human skeleton only for joint location, which does not consider the spatial relationship among the body joints of the human individual and the characteristics of dance movements, which are crucial for understanding dance and generating human action. To overcome such limitations, we need a structure that can formalize the spatial relationship information. We use graph convolutional networks (GCNs) to model the spatial relationships of the human skeleton due to their ability to capture the inherited dependence of graph structure data. Benefited from the strength of extending neural networks to process graph-defined data, GCNs have been successfully applied in several research areas, such as semi-supervised learning [22], and temporal action localization [23]. In the skeleton-based action recognition task, Yan *et al.* [24] embed the human skeleton to graph structures instead of using only hand-crafted parts of the human body.

In this paper, we propose a GraphGRU model as the decoder in the sequence-to-sequence framework for music-oriented dance choreography generation. We construct the GraphGRU model by integrating the graph convolutional network into

This work is supported by the National Key R&D Program of China (No. 2021ZD0110901).

* corresponding author.

Authorized licensed use limited to: MANIPAL INSTITUTE OF TECHNOLOGY. Downloaded on March 28,2026 at 09:31:52 UTC from IEEE Xplore. Restrictions apply.

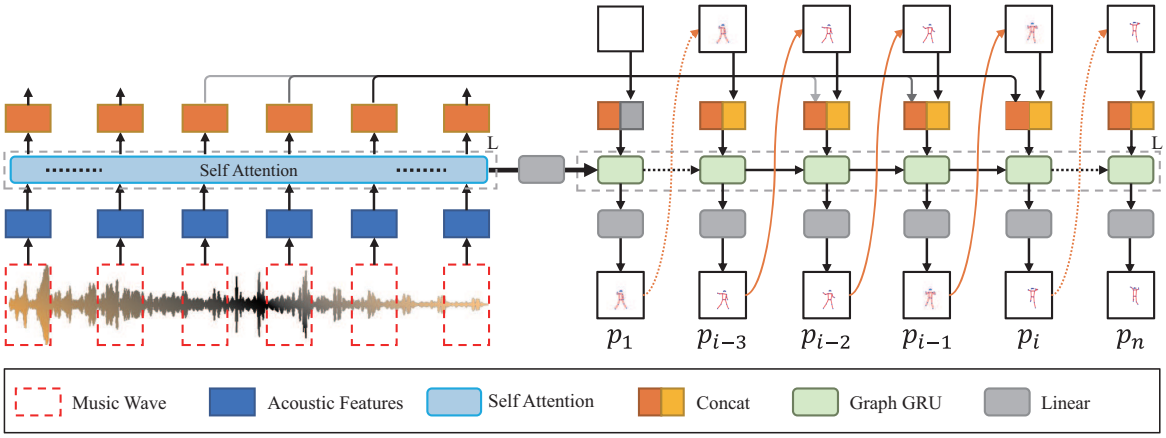

Fig. 1: The overview of our method. The framework to solve the task of dance choreography consists of a transformer-based encoder to extract the music features from the audio signal and a GraphGRU decoder to translate the music features to the dance pose sequence.

the gated recurrent unit. The GCNs can exploit the spatial relationships among body joints. Therefore, the GraphGRU model can capture the spatial dependency of the human skeleton joints as well as the temporal dependency of the dancing movements through video frames.

Most skeleton-based action analysis tasks use the physical connection of the skeleton to construct the graph. However, it is inadequate to apply only one type of motion constraint because dance is a highly organized and choreographed movement of the human body with distinctive patterns. In our dance movement generation, we pay more attention to the dance-relevant semantic relation for generating appropriate dance choreography. We design several dancing-driven kinematic graphs, which define the distance and influence among the body parts of the human skeleton structure while dancing. Moreover, in order to fusion these kinematic graphs, we adopt a path attention block to fuse the graph features.

In the dance choreography generation, one of the most important factors to evaluate the generated dance sequences is whether the generated dance is suitable for the source music. We propose a reverse-generation loss, which measures the accuracy of the reconstructed music features conditioned on generated dance sequence. The proposed reverse-generation loss is able to ensure consistency between the generated dance and the given music in generating process.

The three principal contributions of this paper can be summarized as follows:

- We propose a GraphGRU model by integrating the graph convolutional network into the gated recurrent unit. The GraphGRU model captures the spatial dependency of the human skeleton while modeling the temporal dependency through video frames.
- We define several dance-driven kinematic graphs to represent the physical relation and the semantic correlation of dance movements and adopt a path attention block for the graph features fusion.
- We propose a reverse-generation loss that measures the accuracy of the reconstructed music features to ensure consistency between the generated dance and the given music.

II. Method

Music-oriented dance choreography aims to generate dance movements for the source music. We develop a sequence-to-sequence framework to solve the task of dance choreography, which consists of a transformer-based encoder to encode the music features from the audio signal and a GraphGRU decoder to translate the music features to the dance pose sequence. As shown in Fig. 1, given music M, the proposed model $\mathcal{T}$ generates the corresponding pose sequences P. Firstly, the music encoder $\mathcal{E}$ encoded the music acoustic features $M = \{m_1, \ldots, m_n\}$ into hidden features $U = \{u_1, \ldots, u_n\}$. Secondly, the GraphGRU decoder generates the corresponding dance pose sequences $P = \{p_1, \ldots, p_n\}$ using given hidden features U.

A. Music Encoder

In this framework, the music encoder $\mathcal{E}$ transforms the acoustic features $\{m_t\}_{t=1}^{n}(m_t \in \mathbb{R}^{d_m})$ into the hidden features $\{u_t\}_{t=1}^{n}(u_t \in \mathbb{R}^{d_u})$. In this paper, we adopt a GPT-like transformer to build the Music encoder, which consists of a feature embedding module and three-layer self-attention modules. The transformer-based model is the prominent structure for modeling the sequential modality, such as text, audio and video. In our music encoder, the self-attention modules capture the long-term music acoustic features.

For each self-attention layer in the music encoder, given a feature sequence $U(U \in \mathbb{R}^{n \times d_u})$, we first generated the query, key, and value features by three linear modules, which are denoted as:

$$Q = U \cdot W^Q + b^Q, K = U \cdot W^K + b^K, V = U \cdot W^V + b^V \quad (1)$$

Authorized licensed use limited to: MANIPAL INSTITUTE OF TECHNOLOGY. Downloaded on March 28,2026 at 09:31:52 UTC from IEEE Xplore. Restrictions apply.

The $W^Q, W^K, W^V \in \mathbb{R}^{d_u \times d_u}$, and $d_Q, d_K, d_v \in \mathbb{R}^{d_u}$. Then we generate a new feature sequence by:

$$u_t = \frac{\exp(c_t)}{\sum_{i=1,\dots,t} \exp(c_t)_i} \cdot V_{1,\dots,t}, \quad c_t = \frac{q_t \cdot (K_{1,\dots,t})^T}{\sqrt{d_u}} \tag{2}$$

Due to the online procedure, the model only uses the previous music clip at time t. Therefore we adopt the causality mask in the self-attention module, which guarantees online form.

The music encoder projects the acoustic features of music into intermediate hidden feature space, denoted as $\mathcal{E} : M \rightarrow U$, which are propagated to the dance decoder to generate the pose sequence.

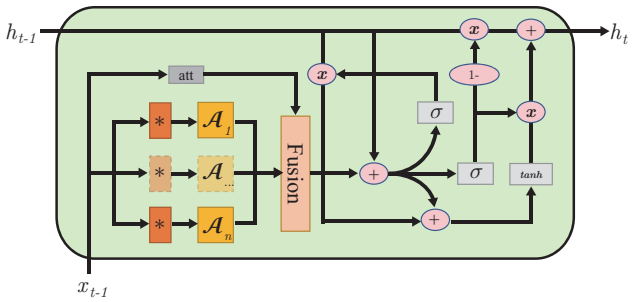

Fig. 2: The Graph convolutional GRU module.

B. GraphGRU based Dance Decoder

We propose a graph convolutional GRU model as the dance decoder for music-oriented dance choreography generation. The dance decoder consists of an embedding module and a three-layer GraphGRU shown in Fig. 1. The dance decoder $\mathcal{D}$ is an autoregressive model which generates the pose sequence P step-by-step based on the hidden feature U. For each step, the decoder first encodes the hidden feature and previous pose and then feeds into our three-layer GraphGRU to generate the pose.

In the embedding process, we transform the previous pose data p_{t-1} into features x_t with the hidden features propagated from the music encoder. However, the u_t is a 1D vector ($\mathbb{R}^{d_u}$), and the p_{t-1} is a 2D vector ($\mathbb{R}^{J \times d}$). Therefore, we add the h_t to each joint of p_{t-1}, which is formulated as:

$$x_t = p_{t-1} \cdot W^e + [u_t, ..., u_t] \tag{3}$$

Here, the W^e is a $\mathbb{R}^{2 \times d_u}$ vector, and the $[, ...,]$ means the vector repeat J times.

To process the structure data and produce dance choreography, we propose a GraphGRU model in the dance decoder. We construct the GraphGRU model by integrating the graph convolutional networks into the gated recurrent unit as shown in Fig. 2. The inputs of each GraphGRU module are the previous output hidden features and bottom-layer output while the output is the generated pose p_t. Compared to the vanilla GRU, we plugin the multi-graph fusion module into the unit, which aggregates different dependencies of joints into a unified feature.

For the human pose in the dancing generation, the dependencies can be represented as multiple adjacency matrixes $\{\dots, \mathcal{A}_i, \dots\}$. We adopt a graph convolution operator to aggregate features with these adjacency matrixes, which is denoted as:

$$y_t^i = \mathcal{A}_i \cdot x_{t-1} \tag{4}$$

Here, the adjacency matrix $\mathcal{A}_i (\mathcal{A}_i \in \mathbb{R}^{J \times J})$ is a pre-defined body graph. Each y_t^i represents aggregated features in graph space according to one particular dependency. The detail of Each $\mathcal{A}$ is introduced in the Sec. II-C.

To fuse the graph features y_t^i, we develop a path attention module, which is formulated as:

$$y_t = \sum_i \alpha_i * y_t^i, \quad \alpha_i = \frac{\exp(x_{t-1} \cdot W^i)}{\sum_j \exp(x_{t-1} \cdot W^j)} \tag{5}$$

the W^i is the $\mathbb{R}^{d_h \times 1}$ parameter. Compared to channel attention and spatial attention, the proposed path attention fuses the features from different paths rather than the spatial or channel dimension. The softmax operator is adopted to normalize the attention values, which ensures the magnitude of fused features y_t.

To model the spatial dependency and temporal dependency simultaneously, our GraphGRU adopts gated functions on the fused features y_t and the preceding information h_{t-1}:

$$h_t = GRU(y_t, h_{t-1}) \tag{6}$$

Finally, we stack three layers of GraphGRU module, and a linear operator to generate the human pose. During the training phase, we still adopt the curriculum learning strategy to alleviate exposure bias, which gradually increases the proportion of generated human poses and ground-truth human poses as inputs of the decoder along with training progress.

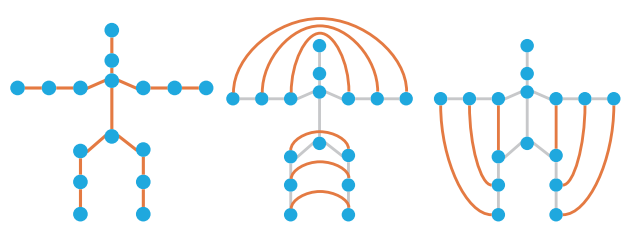

(a) skeleton (b) mirror (c) somersault

Fig. 3: Three types of dependency graphs.

C. Dependency graphs

We define several dance-driven kinematic graphs as dependency graphs to represent relationships of human anatomical joints, which encompass the physical relation and movement correlation. From the perspective of anatomy, we conclude the well-defined graph as shown in Fig. 3a, which represents the physically linked model as a skeleton model.

The skeleton model is a conventional model for human motion, and it models the common movement of humans

Authorized licensed use limited to: MANIPAL INSTITUTE OF TECHNOLOGY. Downloaded on March 28,2026 at 09:31:52 UTC from IEEE Xplore. Restrictions apply.

TABLE I: Musci-oriented dance choreography on DR dataset.

Method	FID↓	ACC↑	Beat Coverage↑	Beat Hit Rate↑	Diversity↑
Real Dances	2.6	99.5	56.4	63.9	7.9
MoCogan [25]	48.5	33.8	10.9	28.5	-
Dancing2Music [14]	22.7	60.4	15.7	65.7	3.7
DanceRevolution [15]	6.5	77.6	**21.8**	68.4	7.1
Ours	**3.9**	**93.3**	21.5	**82.5**	**7.3**

efficiently. Due to the diversity and complexity of dance movements, it is inadequate to only apply a single type of motion constraint. Dance is a highly organized and choreographed movement of the human body and inherits distinctive patterns. These patterns are conducive to pursuing the grace of dance while ensuring body balance and motion fluency and generally indicate the correlation of body joints that may not be physically linked.

The movement correlations are represented as two types based on our observation: mirror correlation and somersault correlation. As shown in Fig. 3b, the mirror correlation models the relations of the left and the right of the human body, which conduces to keeping left-right balance straightforwardly and also facilitates modeling the rotation of the human body. As shown in Fig. 3c, the somersault correlation contributes to modeling the up-low body balance, which plays an important role when the body moves fiercely like turning a somersault. Compared to the physical relations, these two correlations are sparse. The number of links in the physical relations is 15 while the links of the other two are only 6.

D. Reverse-generation loss

In the dance choreography generation, one of the most important factors to evaluate the generated dance sequences is whether the generated dance is suitable for the source music. We introduce a reverse-generation loss that measures the accuracy of the reconstructed music features conditioned on generated dance sequence to enhance the consistency of results. We utilize the L1 loss to calculate the distance between the reconstructed music and the original music. The reverse-generation loss is formulated as:

$$\mathcal{L}_r = \frac{1}{T \times d_m} \sum |\psi(\tilde{p}_i) - m_i| \tag{7}$$

The ψ is an RNN-based model, which transfers the pose sequence into music acoustic features.

In the music-oriented dance choreography generation task, we adapt the L1 loss to measure the distance between the predicted pose sequence $\{\tilde{p}_i\}_1^T$ and target poses $\{p_i\}_1^T$. Due to the invisibility of some joints, we introduce an indicator $\{v_i\}_1^T (v_i \in \mathbb{R}^J)$ to mask out the invisible joints.

The overall training loss is formulated as:

$$\mathcal{L} = \frac{1}{T \times J \times 2} \sum v_i \cdot |\tilde{p}_i - p_i| + \lambda \mathcal{L}_r \tag{8}$$

The λ is a hyper-parameter to balance these two losses.

III. EXPERIMENTS

In this section, we conduct experiments on the dataset produced by [15] to verify the effectiveness of our model. Moreover, to further demonstrate the advantage of our Graph-GRU model, we conduct extended experiments on the fine-grained dance dataset HIT Dances [26]. The generated dance sequences are realistic, coherent, and appropriate to the specific music, which demonstrates that the proposed GraphGRU model can effectively solve the task of automatic dance choreography.

A. datasets

The DR dataset is collected by the Huang *et al.* [15], which contains three types of music genres: Ballet, Hip-hop and Japanese Pop. Each music genre is composed of 200 paired music clips and dance pose sequences, and the duration of each clip is 60 seconds. Each pose in the DR dataset consists of 25 key joints.

The HIT Dances dataset consists of 6 fine-grained categories of dances, which are Ballet, Classical, Dai, Hip-hop, Mongolian and Uygur. There are 720 dance videos in the training dataset and 120 dance videos in the test dataset. We trim the clips into 40 seconds duration. The original HIT dataset only contains the dance videos with class labels, thus we extend the dataset by extracting the audio features and estimating the poses of dance movement in each frame. The configuration of the pose is 16 key joints following the MPII [27] dataset.

We extract the following acoustic features: mel frequency cepstral coefficients (MFCC), MFCC delta, constant-Q chromagram, tempogram and onset strength from music clips.

B. evaluation metrics

We adopt the Frchet Inception Distance (FID) [28] to measure how close the distribution of generated dances is to the real. Due to no standard feature extractor in the dance classification task, we train a two-layer GRU model on each dataset for pose-based genre classification. In addition, we use beat coverage(BC) and beat hit rate(BHR) to evaluate the consistency between kinematic beats and music beats. The beat coverage is the ratio of kinematic beats and music beats, and the beat hit rate is the ratio of aligned beats and kinematic beats. The aligned beats are matched between music beats and kinematic beats. For evaluating the diversity of generated dances, we randomly draw 60 music clips to generate dances each time and compute the average Euclidean feature distance between 500 combinations.

Authorized licensed use limited to: MANIPAL INSTITUTE OF TECHNOLOGY. Downloaded on March 28,2026 at 09:31:52 UTC from IEEE Xplore. Restrictions apply.

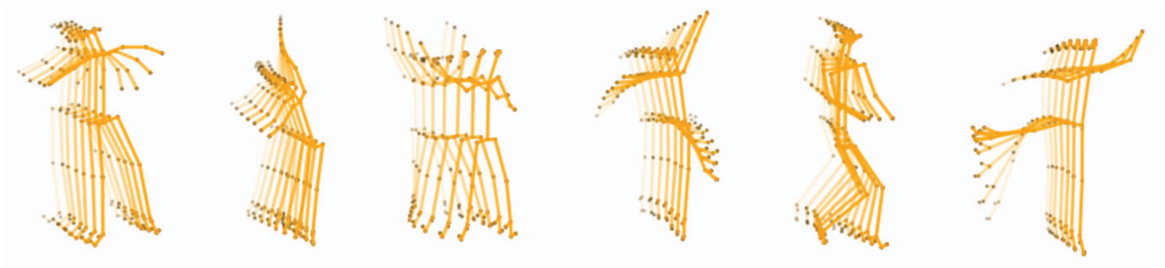

Fig. 4: Visualization of dance sequences generated by our GraphGRU model on DR dataset.

C. Results on DanceRevolution Dataset

To verify the effectiveness of our GraphGRU model, we conduct qualitative and quantitative experiments on the DR dataset. The quantitative experimental results are shown in Tab. I.

The FID of our method is 3.9, which denotes that the distance between the distribution of generated dance and real dance is the smallest. The ACC of classification is 93.3% shows that our method can generate dance sequences suitable to the music type. Besides, our method outperforms DanceRevolution by 14.1% on beat hit rate while the beat coverage is similar, which shows that our generated motion is better correlated with the given music compared to the baselines. As for the evaluation of diversity, the diversity of our generated dance sequences is almost similar to the real dance sequences.

We randomly visualize some of the dance sequences generated by the proposed GraphGRU model. As shown in Fig. 4, the generated dance sequences are realistic, coherent, and diverse, which demonstrates that the proposed GraphGRU model can effectively solve the task of automatic dance choreography.

TABLE II: Dance choreography results on HIT Dances dataset.

method	FID↓	Diversity↑
DanceRevolution [15]	18.91	14.2
Ours	**13.37**	**14.8**

D. Results on HIT Dances Dataset

To further demonstrate the efficiency of our GraphGRU model, we conduct extended experiments on the fine-grained dance dataset HIT Dances. The main comparations with DanceRevolution are shown in Tab. II. The comparations show that we can generate dance choreography with larger diversity and better distribution of data.

We visualize some of the generated dance sequences in Fig. 5. The 6 dance sequences are randomly chosen from the different music genres. The pose sequences are Ballet, Classical, and Hip-hop from left to right in the first line and Mongolian, Dai, and Uygur in the second line. As shown in the visualization, dance sequences generated by our proposed GraphGRU model are discriminative in similar music genres.

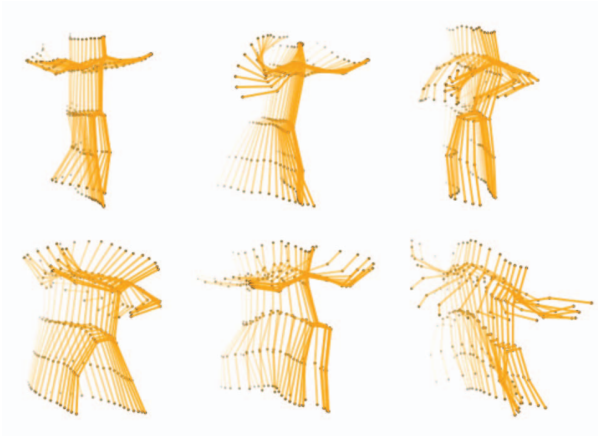

Fig. 5: Generated dance sequences on HIT dataset.

E. Ablation Study

We conduct several ablation experiments to study the impact of each component of our method.

Different dependency graphs We exploit the different dependency graphs in the GraphGRU model. As shown in Tab. III, when using the path attention to fuse the graph features, adding the mirror graph b and the somersault graph c to the basic skeleton graph a performs better in FID than using a single graph a. The combination of the skeleton graph a and the mirror graph b achieves 14.34 in FID because there are many rotation movements in the HIT Dances dataset.

TABLE III: Ablation study on HIT Dances dataset.

Graph			Attention		RGLoss	FID↓
a	b	c	spatial	path	λ	
√						16.95
√	√		√			16.97
√	√	√	√			17.58
√	√			√		14.34
√	√	√		√		15.29
√	√			√	1.0	20.68
√	√			√	0.01	13.37

Authorized licensed use limited to: MANIPAL INSTITUTE OF TECHNOLOGY. Downloaded on March 28,2026 at 09:31:52 UTC from IEEE Xplore. Restrictions apply.

Attention fusion mudule We compare the spatial attention module and proposed path attention module in fusing graph features in Tab. III. The spatial attention degrades the performance in both graph combinations. On the contrary, the proposed path attention module successfully fuses the graph features and generates better dance sequences similar to real dance distribution.

Reverse-generation loss We explore the impact of the proposed reverse-generation loss in dance choreograph generation. As shown in Tab. III, the FID is 13.34 without using the reverse-generation loss. It achieves 13.37 in FID when using the reverse-generation loss with $\lambda = 0.01$, which denotes that the proposed reverse-generation loss is effective in generating dance choreography. However, it has a negative effect when $\lambda = 1$.

IV. Conclusion

In this paper, we propose a GraphGRU model to solve the challenging task of dance choreography, which automatically produce dance sequence according to music. We construct the GraphGRU model by integrating the graph convolutional network into the gated recurrent unit. The GraphGRU can model the spatial relationship among the human skeleton joints as well as the temporal relationship of the dancing movements in video frames. Besides, we construct several dance-driven kinematic graphs for the GraphGRU structure and establish a path attention fusion block to boost the graph features. We also design a reverse-generation loss to ensure the consistency of generated dance and the given music. Extensive qualitative and quantitative experiments demonstrate that the proposed model GraphGRU can effectively solve the task of automatic dance choreography.

References

[1] K. Fragkiadaki, S. Levine, P. Felsen, and J. Malik, "Recurrent network models for human dynamics," in *Proceedings of the IEEE international conference on computer vision*, 2015, pp. 4346–4354.

[2] R. Villegas, J. Yang, Y. Zou, S. Sohn, X. Lin, and H. Lee, "Learning to generate long-term future via hierarchical prediction," in *international conference on machine learning*. PMLR, 2017, pp. 3560–3569.

[3] L.-Y. Gui, Y.-X. Wang, X. Liang, and J. M. Moura, "Adversarial geometry-aware human motion prediction," in *Proceedings of the european conference on computer vision (ECCV)*, 2018, pp. 786–803.

[4] M. A. Kiasari, D. S. Moirangthem, and M. Lee, "Human action generation with generative adversarial networks," *arXiv preprint arXiv:1805.10416*, 2018.

[5] Z. Wang, P. Yu, Y. Zhao, R. Zhang, Y. Zhou, J. Yuan, and C. Chen, "Learning diverse stochastic human-action generators by learning smooth latent transitions," in *Proceedings of the AAAI conference on artificial intelligence*, vol. 34, no. 07, 2020, pp. 12 281–12 288.

[6] P. Yu, Y. Zhao, C. Li, J. Yuan, and C. Chen, "Structure-aware human-action generation," in *European conference on computer vision*. Springer, 2020, pp. 18–34.

[7] P. Roy, S. Ghosh, S. Bhattacharya, U. Pal, and M. Blumenstein, "TIPS: Text-induced pose synthesis," in *Computer Vision – ECCV 2022*, S. Avidan, G. Brostow, M. Cissé, G. M. Farinella, and T. Hassner, Eds. Cham: Springer Nature Switzerland, 2022, pp. 161–178.

[8] S. Ginosar, A. Bar, G. Kohavi, C. Chan, A. Owens, and J. Malik, "Learning individual styles of conversational gesture," in *Proceedings of the IEEE/CVF Conference on Computer Vision and Pattern Recognition*, 2019, pp. 3497–3506.

[9] Y. Hou, H. Yao, X. Sun, and H. Li, "Soul dancer: Emotion-based human action generation," *ACM Transactions on Multimedia Computing, Communications, and Applications (TOMM)*, vol. 15, no. 3s, pp. 1–19, 2020.

[10] E. Shlizerman, L. Dery, H. Schoen, and I. Kemelmacher-Shlizerman, "Audio to body dynamics," in *Proceedings of the IEEE conference on computer vision and pattern recognition*, 2018, pp. 7574–7583.

[11] R. Fan, S. Xu, and W. Geng, "Example-based automatic music-driven conventional dance motion synthesis," *IEEE transactions on visualization and computer graphics*, vol. 18, no. 3, pp. 501–515, 2011.

[12] M. Lee, K. Lee, and J. Park, "Music similarity-based approach to generating dance motion sequence," *Multimedia tools and applications*, vol. 62, no. 3, pp. 895–912, 2013.

[13] T. Tang, J. Jia, and H. Mao, "Dance with melody: An lstm-autoencoder approach to music-oriented dance synthesis," in *Proceedings of the 26th ACM international conference on Multimedia*, 2018, pp. 1598–1606.

[14] H.-Y. Lee, X. Yang, M.-Y. Liu, T.-C. Wang, Y.-D. Lu, M.-H. Yang, and J. Kautz, "Dancing to music," in *Advances in Neural Information Processing Systems*, H. Wallach, H. Larochelle, A. Beygelzimer, F. dAlché-Buc, E. Fox, and R. Garnett, Eds., vol. 32. Curran Associates, Inc., 2019.

[15] R. Huang, H. Hu, W. Wu, K. Sawada, M. Zhang, and D. Jiang, "Dance revolution: Long-term dance generation with music via curriculum learning," in *International Conference on Learning Representations*, 2021. [Online]. Available: https://openreview.net/forum?id=xGZG2kS5bFk

[16] G. Sun, Y. Wong, Z. Cheng, M. S. Kankanhalli, W. Geng, and X. Li, "Deepdance: Music-to-dance motion choreography with adversarial learning," *IEEE Transactions on Multimedia*, vol. 23, pp. 497–509, 2021.

[17] M. Zhang, C. Liu, Y. Chen, Z. Lei, and M. Wang, "Music-to-dance generation with multiple conformer," in *Proceedings of the 2022 International Conference on Multimedia Retrieval*, 2022, pp. 34–38.

[18] R. Li, S. Yang, D. A. Ross, and A. Kanazawa, "Ai choreographer: Music conditioned 3d dance generation with aist++," in *Proceedings of the IEEE/CVF International Conference on Computer Vision*, 2021, pp. 13 401–13 412.

[19] W. Zhuang, Y. Wang, J. Robinson, C. Wang, M. Shao, Y. Fu, and S. Xia, "Towards 3d dance motion synthesis and control," *arXiv preprint arXiv:2006.05743*, 2020.

[20] L. Siyao, W. Yu, T. Gu, C. Lin, Q. Wang, C. Qian, C. C. Loy, and Z. Liu, "Bailando: 3d dance generation by actor-critic gpt with choreographic memory," in *Proceedings of the IEEE/CVF Conference on Computer Vision and Pattern Recognition*, 2022, pp. 11 050–11 059.

[21] B. Li, Y. Zhao, S. Zhelun, and L. Sheng, "Danceformer: Music conditioned 3d dance generation with parametric motion transformer," in *Proceedings of the AAAI Conference on Artificial Intelligence*, vol. 36, no. 2, 2022, pp. 1272–1279.

[22] T. N. Kipf and M. Welling, "Semi-supervised classification with graph convolutional networks," *arXiv preprint arXiv:1609.02907*, 2016.

[23] R. Zeng, W. Huang, M. Tan, Y. Rong, P. Zhao, J. Huang, and C. Gan, "Graph convolutional networks for temporal action localization," in *Proceedings of the IEEE/CVF International Conference on Computer Vision*, 2019, pp. 7094–7103.

[24] S. Yan, Y. Xiong, and D. Lin, "Spatial temporal graph convolutional networks for skeleton-based action recognition," in *Thirty-second AAAI conference on artificial intelligence*, 2018.

[25] S. Tulyakov, M.-Y. Liu, X. Yang, and J. Kautz, "Mocogan: Decomposing motion and content for video generation," in *Proceedings of the IEEE Conference on Computer Vision and Pattern Recognition (CVPR)*, June 2018.

[26] T. Han, H. Yao, C. Xu, X. Sun, Y. Zhang, and J. J. Corso, "Dancelets mining for video recommendation based on dance styles," *IEEE Transactions on Multimedia*, vol. 19, no. 4, pp. 712–724, 2017.

[27] M. Andriluka, L. Pishchulin, P. Gehler, and B. Schiele, "2d human pose estimation: New benchmark and state of the art analysis," in *IEEE Conference on Computer Vision and Pattern Recognition (CVPR)*, June 2014.

[28] M. Heusel, H. Ramsauer, T. Unterthiner, B. Nessler, and S. Hochreiter, "Gans trained by a two time-scale update rule converge to a local nash equilibrium," *Advances in neural information processing systems*, vol. 30, 2017.

Authorized licensed use limited to: MANIPAL INSTITUTE OF TECHNOLOGY. Downloaded on March 28,2026 at 09:31:52 UTC from IEEE Xplore. Restrictions apply.