MANMOHAN TECHNICAL UNIVERSITY

Department of Electrical And Electronics engineering

TITTLE : AUTOMATIC ROOF CLOSING SYSTEM USING LDR

Project Members:

Sushil Dulal (15)

Pabitra Khaptari (07)

Gautam Kumar Gupta (05)

Supervisor:

Er. Sagun Paudyal

Department of Electrical and Electronics Engineering

Manmohan Technical University

Date of Presentation: 2081/02/09

Background And Introduction:

In this Modern world, the use of manually operated system has been reduced. So, it is the great idea for operating the roof automatically (closing and opening) by utilizing the natural light source "Sunlight".

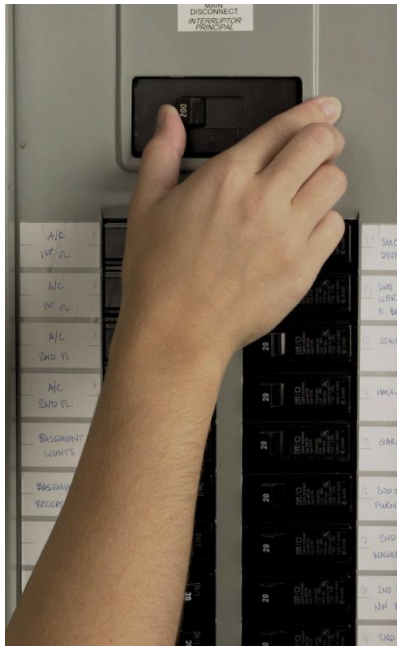

LDR : Light Dependent Resistor is the light sensing component whose resistance decreases when light falls on it and allows current to pass through it.

Benefits : Cost Effective : Inexpensive than other sensors

Simplicity : Their circuits are simpler to design

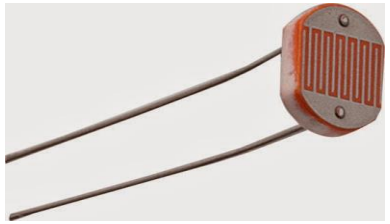

Other components :

Transistors (BC547)

6v Relays

Resistors

NOT Gate (IC 7404)

Connecting wires

Op Amp IC 741

Diodes

Problem Definition:

Some of the Problems to be solved in the Project:

Regulating temperature and Light for plants (green house): This will result in better growth of the plants.

Safety and Security : It will Protect the house from thief and other birds and animals during night time.

Convenience: The roof automatically adjusts to sunlight levels, reducing the need for manual operation.

Fading of furniture and fabrics: Prolonged sun exposure can fade the colours of furniture. An Automatic closing roof system can prevent this by providing shade when needed.

OBJECTIVES OF THE PROJECT:

Some of the objectives of the project are;

Enhanced Comfort :
Maintain a comfortable indoor environment by controlling the amount of sunlight entering the space.

Energy Efficiency :
Optimize the use of natural light and reduce the need for artificial lighting. When natural light is sufficient, the roof remains open, minimizing energy consumption for lighting.

LITERATURE STUDY:

- Study of Op amp
- Study of LDR
- Study of Transistor
- Study of Resistors
- Study of Relay
- Study of Diode
- Study of DC motor
- Study of Switch
- Study of body of the System

REFERENCE:

- R. Gregorian, INTRODUCTION TO CMOS OP-AMP AND COMPARATOR

- Malik Sikandar Hayat Khiyal, Aihab Khan, and Erum Shehzadi. SMS Based wireless Home Appliance control System (HACS) for Automating Appliances And Security, Issues in Informing Science and Information Technology. Vol.9.pp.887-894. 2009.

- Franco, S.(2015). Design with operational amplifiers and Analog integrated circuit(4th ed). McGraw-Hill Education.

- Hughes, A.,& Drury, B.(2019). Electric motors and drives: Fundamentals, types, and appliances (5th ed.). Newnes.

- YouTube : channel names : Slide Canopy , Vetra furniture
- Google Gemini

PROJECT METHODOLOGY:

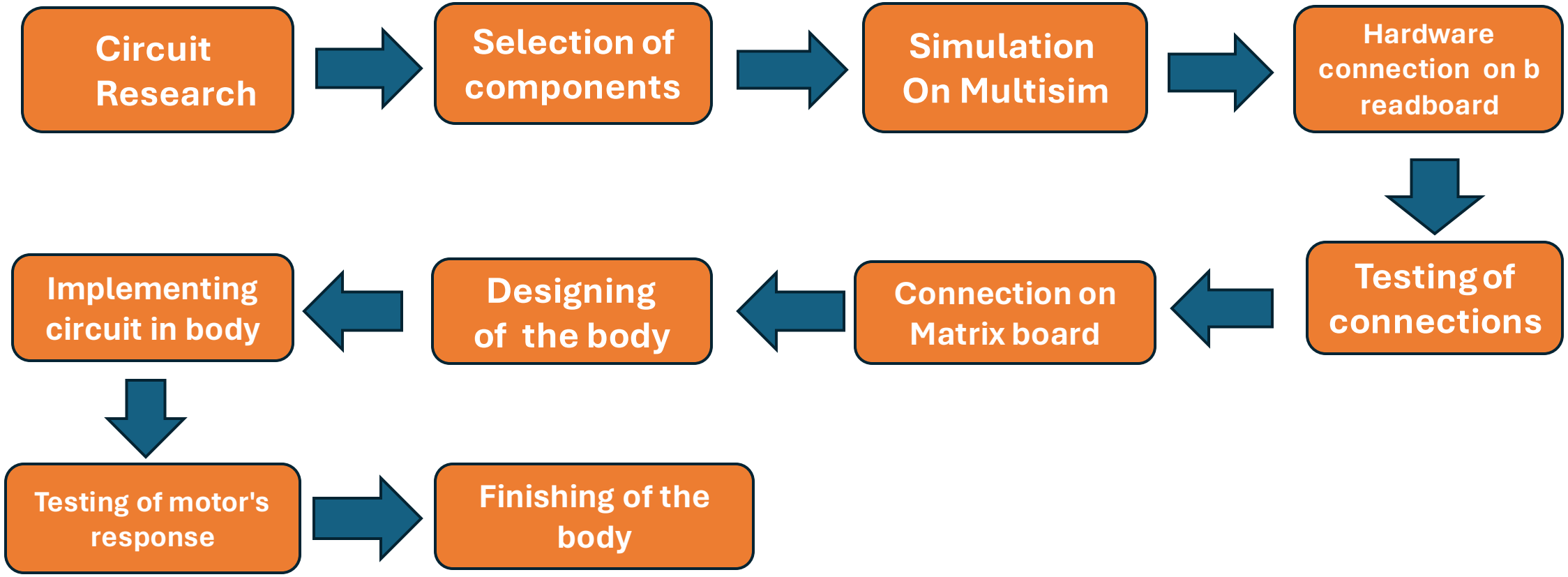

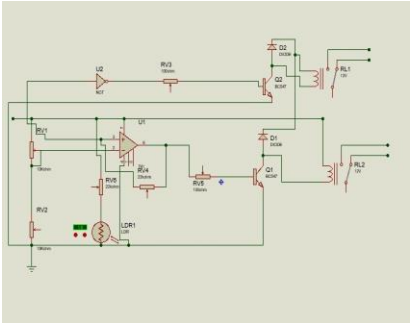

Simulation on Multisim

Collection of the components

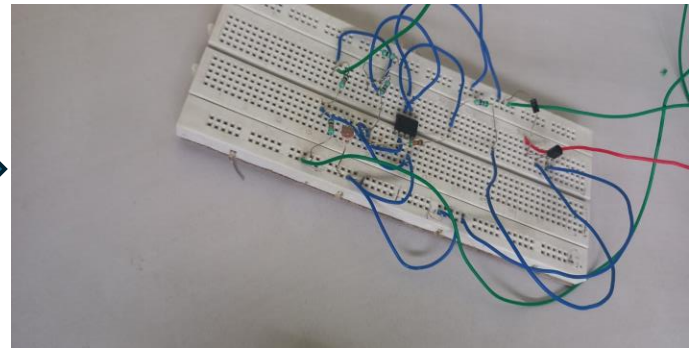

Connection on bread board

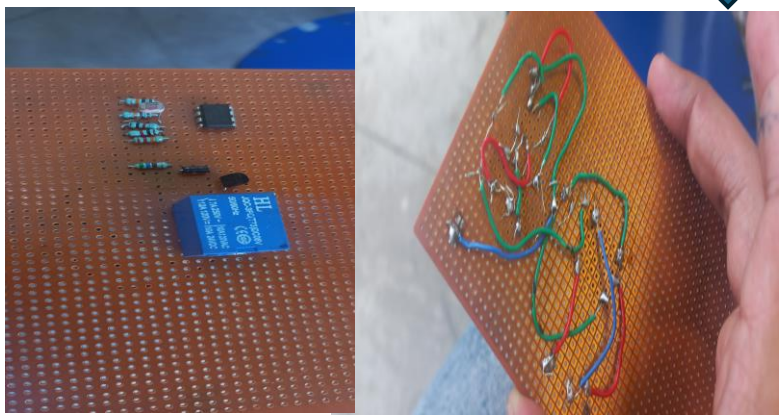

Connection on Matrix board

Designing of the body

Expenditure Table:

S.N	Components	Quantity	price
1.	Op amp LM 741	1	35
2.	Resistor	8	20
3.	Diode	2	30
4.	Transistor BC547	2	20
5.	LDR	1	40
6.	Relay 6v	2	100
7.	Battery 4v	3	450
8.	Dc motor with gear	1	700
9.	Jumping wires	6	30
10.	NOT gate IC7404	1	20
11.	LED	2	10
	Net expenses	**=**	**Nrs.1455**

Hence , our overall expenditure is Nrs.1500 including glue stick, soldering aluminum wire, Screw , etc.

SYSTEM DESIGN AND MODELLING:

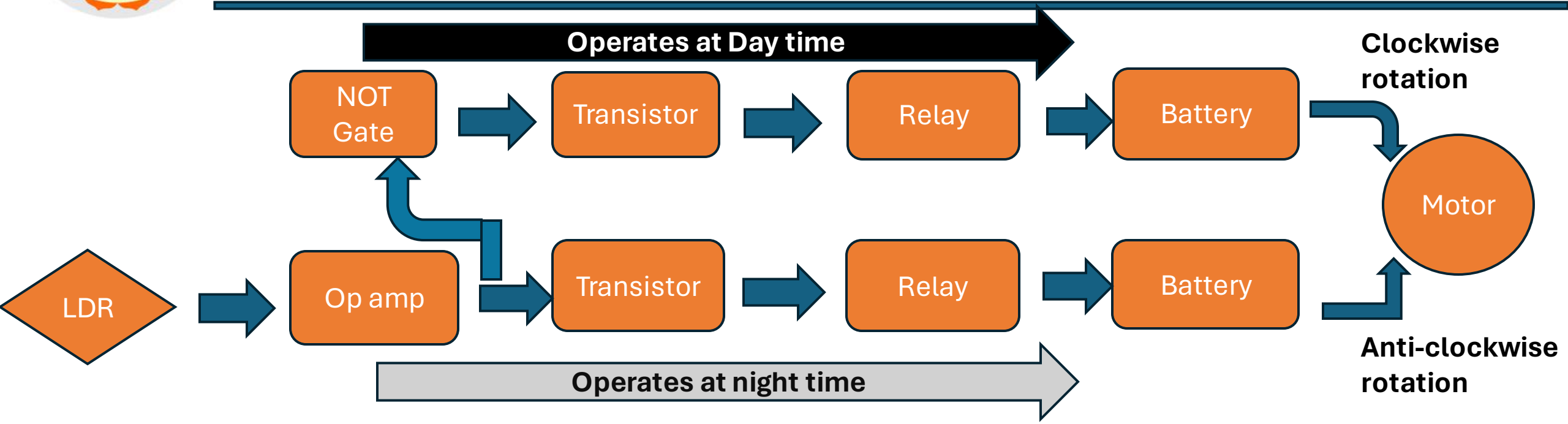

Flowchart showing the operation of Automatic Roof closing System

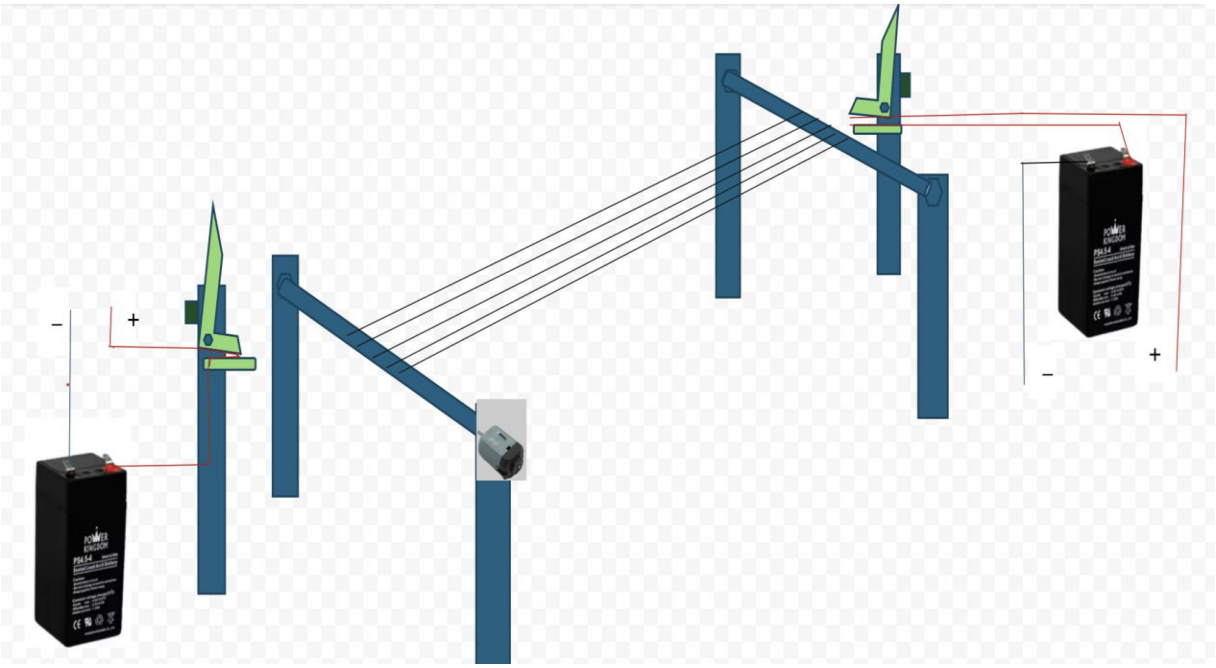

Fig: Body of the Automatic Roof Closing system

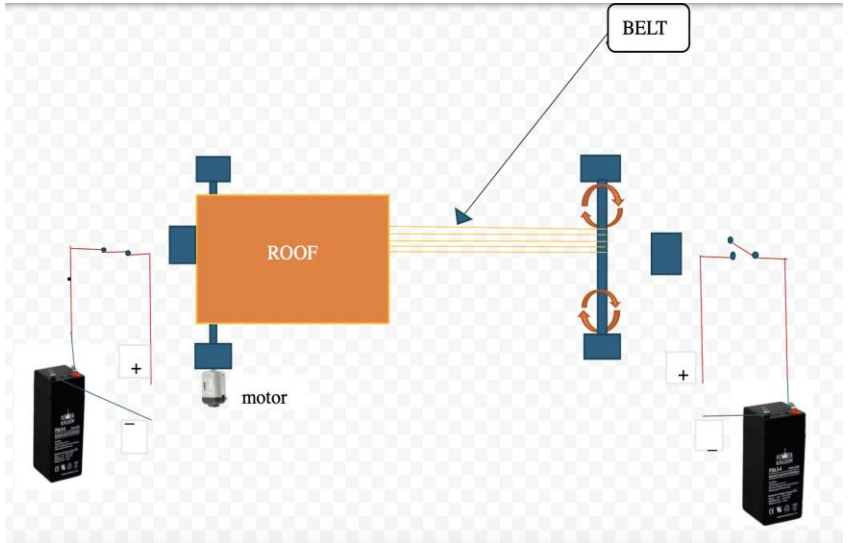

TOP VIEW

At Day

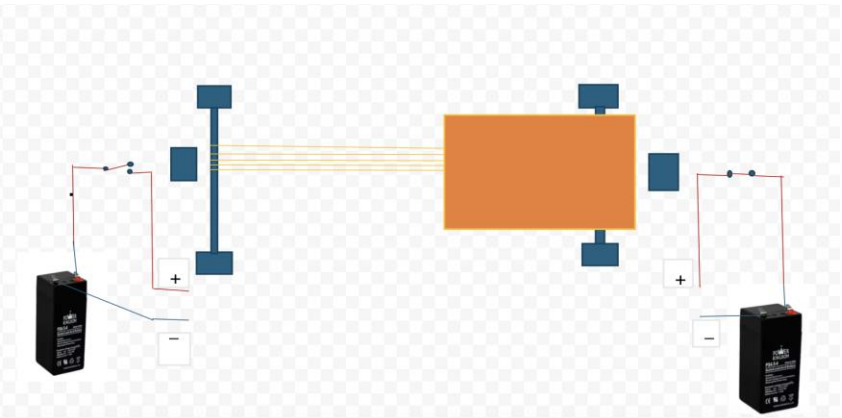

At Night

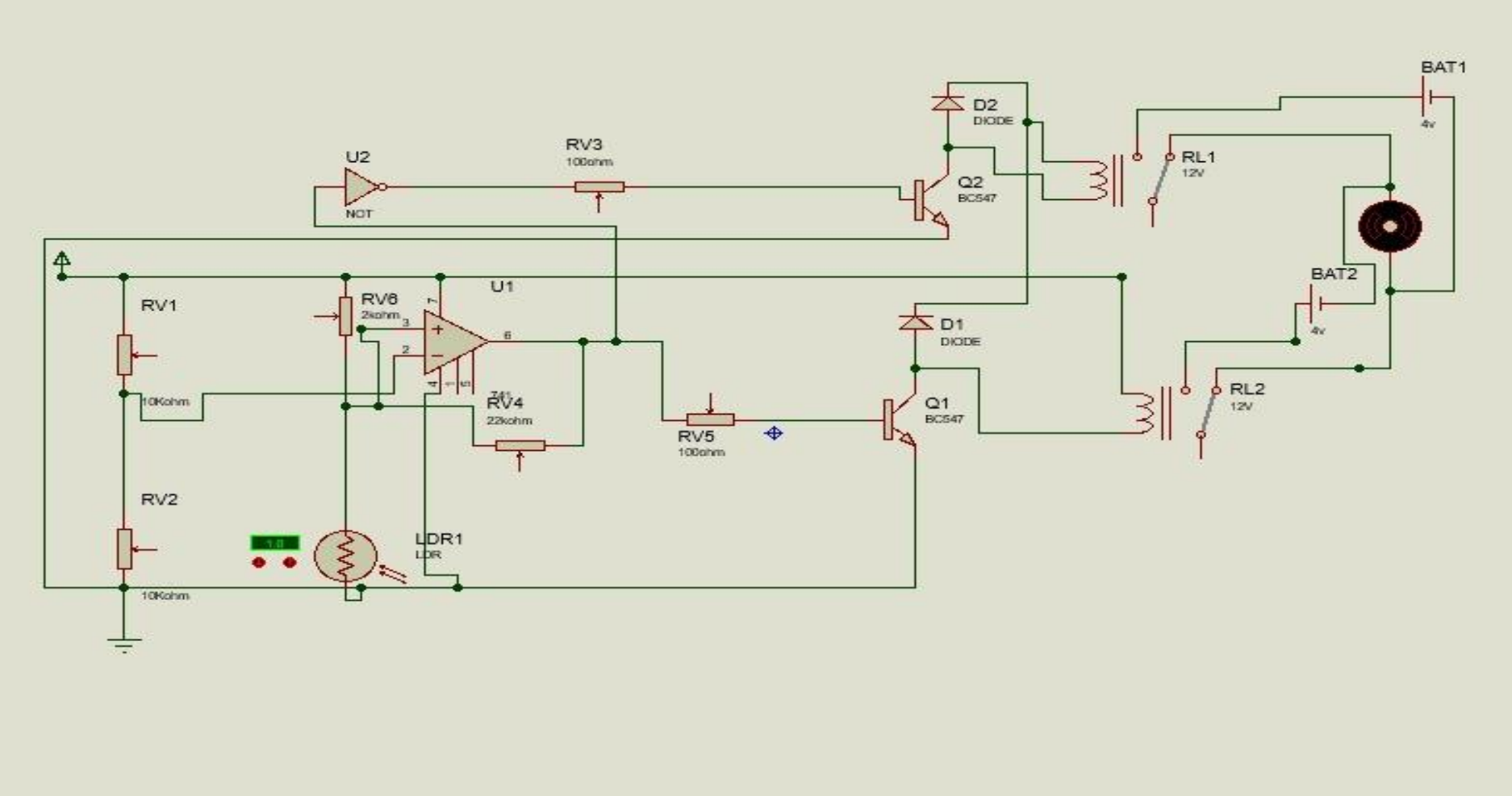

Circuit Diagram of automatic roof closing system

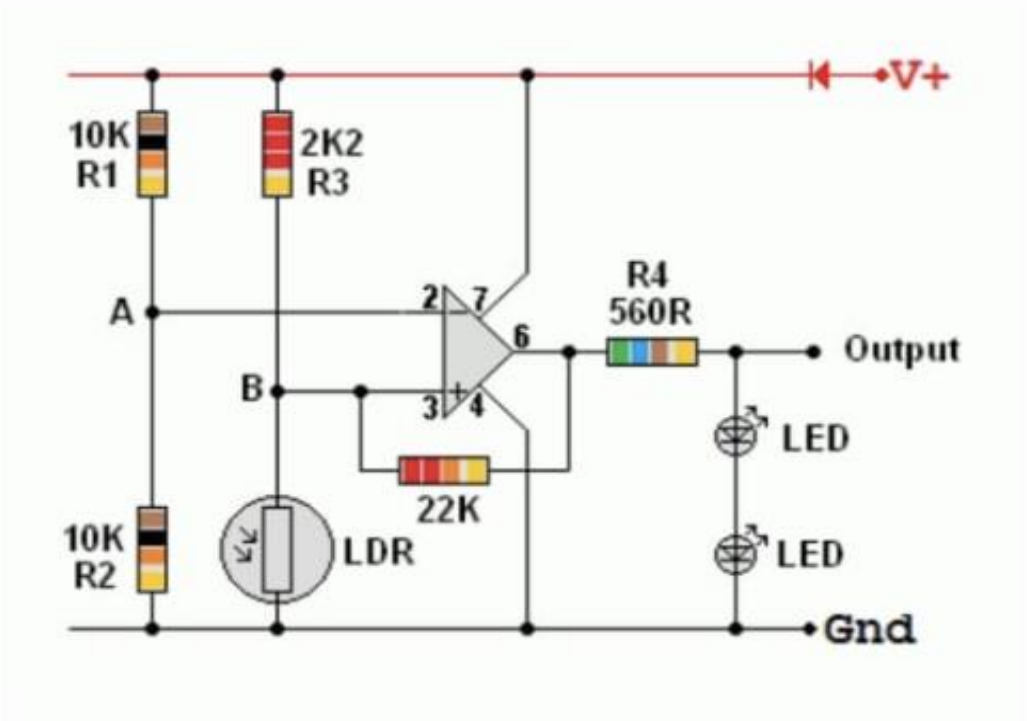

Circuit diagram of Op-Amp

CIRCUIT ANALYSIS:

- LDR Resistance at normal room light = 9.5kΩ
- LDR Resistance at full dark = 19.5kΩ
- LDR Resistance at smart phone flash light = 0.3kΩ
  (Distance between the Light sensor and flash light is in between 1cm-3cm)

- Op amp output in smart phone flash light = 0.5v
- Op amp output in dark = 2.5v
- Op-amp and transistor output in smart phone flash light = 0v
- Op-amp and transistor output in dark = 4.07v

- NOT Gate and transistor output in smart phone flash light = 3.98v
- NOT Gate and transistor output in dark = 0v

RESULT AND ANALYSIS:

During night;

- motor will receive 4.07v from the circuit
- Motor will rotates in clockwise direction
- Roof will get closed.

During Daytime;

Motor will receive 3.98v from the circuit

Motor will rotates in anti-clockwise direction

Roof will get opened.

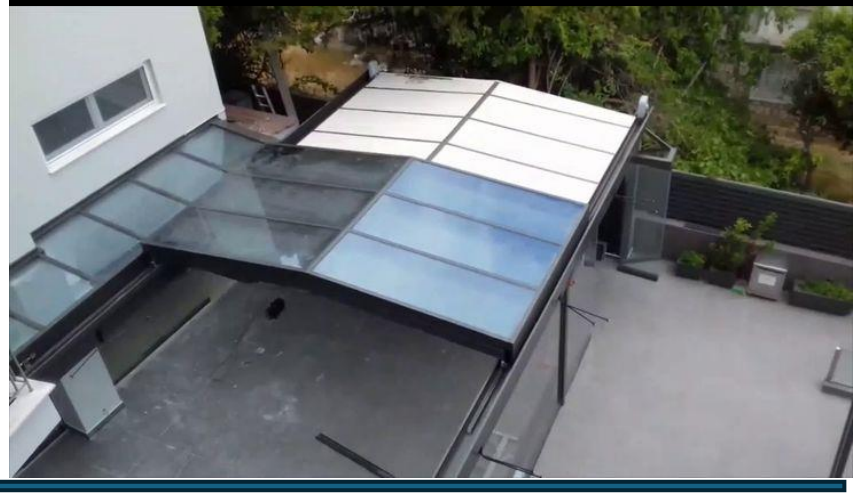

CONCLUSION AND FUTURE WORKS:

As all of us are searching for conveniences in each and every things. So, the implementation of automatic roof closing system will be great idea to meet the requirements of many people. Hence , we can conclude that, we can simply and automatically open or close the roof as our requirements by utilizing the natural light source.

For future works :

- Use of rain sensor instead of LDR
- Mobile app control
- Use of wind sensor
- Timer control based on desired schedule

THANK YOU