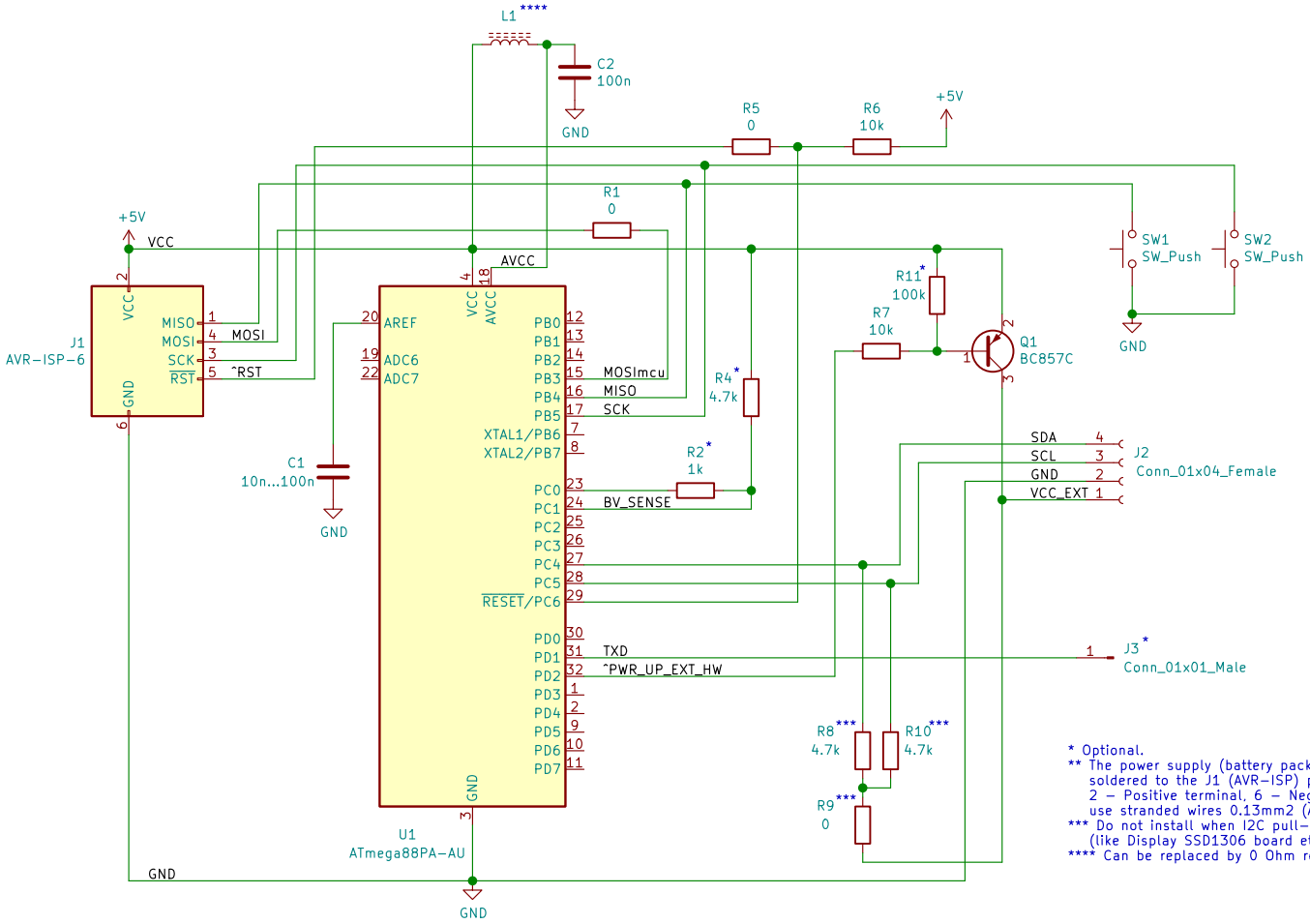

Color table for
TWI bus wiring

Patch cord cable
UTP 0.22 mm2 (24AWG)
stranded

VCC_EXT	orng
GND	orng-w
SDA	green
GND	green-w
SCL	brwn
GND	brwn-w

* Optional.
** The power supply (battery pack 3x1.5V AA, in series: 4.5V total) soldered to the J1 (AVR-ISP) pins on the back copper side, 2 - Positive terminal, 6 - Negative terminal, use stranded wires 0.13mm2 (AWG26).
*** Do not install when I2C pull-up is done on the connected modules (like Display SSD1306 board etc.)
**** Can be replaced by 0 Ohm resistor

Sheet: /
File: oxy_p_main_board.sch

Title: Oximeter main board

Size: A4	Date: 2023-09-30	Rev: 01
KiCad E.D.A. kicad 5.1.9		Id: 1/1