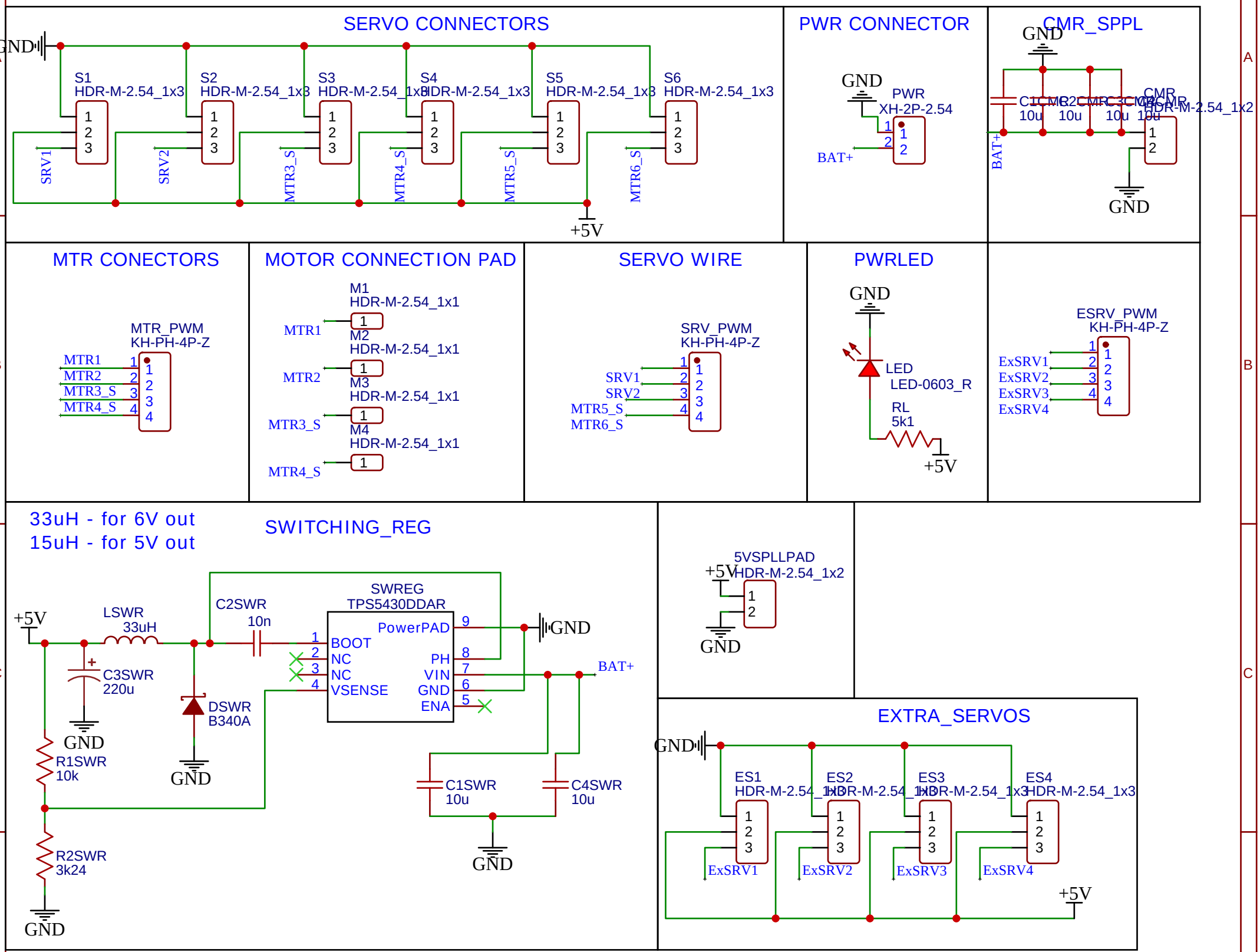

TITLE: Sheet_1	REV: 1.0
Company: Your Company	Sheet: 1/1
Date: 2024-03-05	Drawn By: suturin_daniil

嘉立创EDA