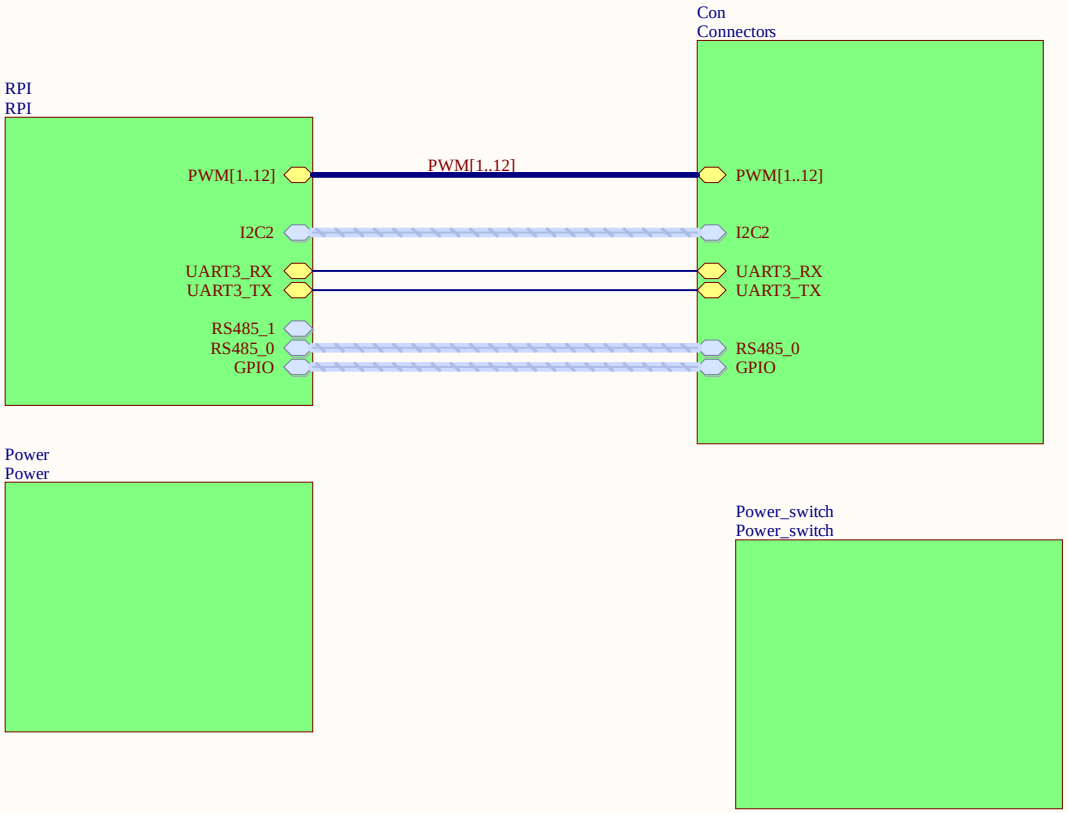

Title		
Size: A4	Number	Revision
Date: 10.05.2024		Sheet of
File: B:\SAUVC_2025\..\Mother_board_sauvc_2025.SchDoc		Drawn By:

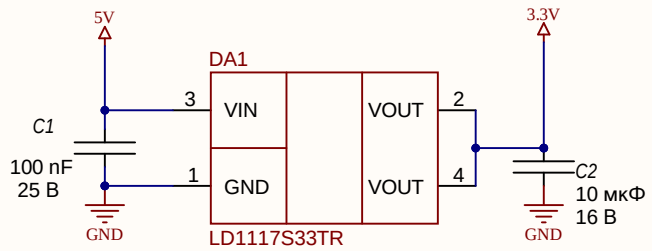

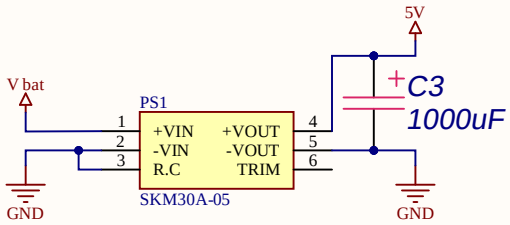

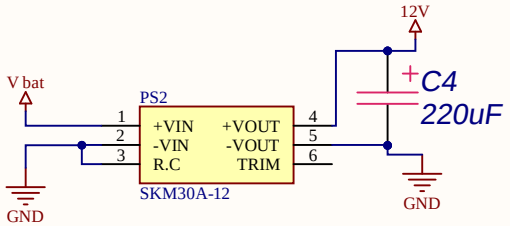

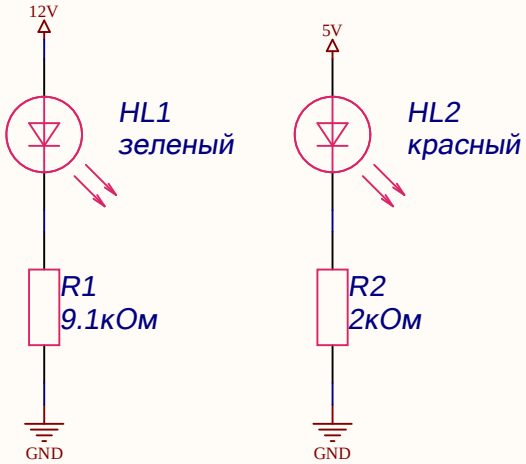

Title		
Size A4	Number	Revision
Date: 10.05.2024		Sheet of
File: B:\SAUVC_2025\..\Power.SchDoc		Drawn By:

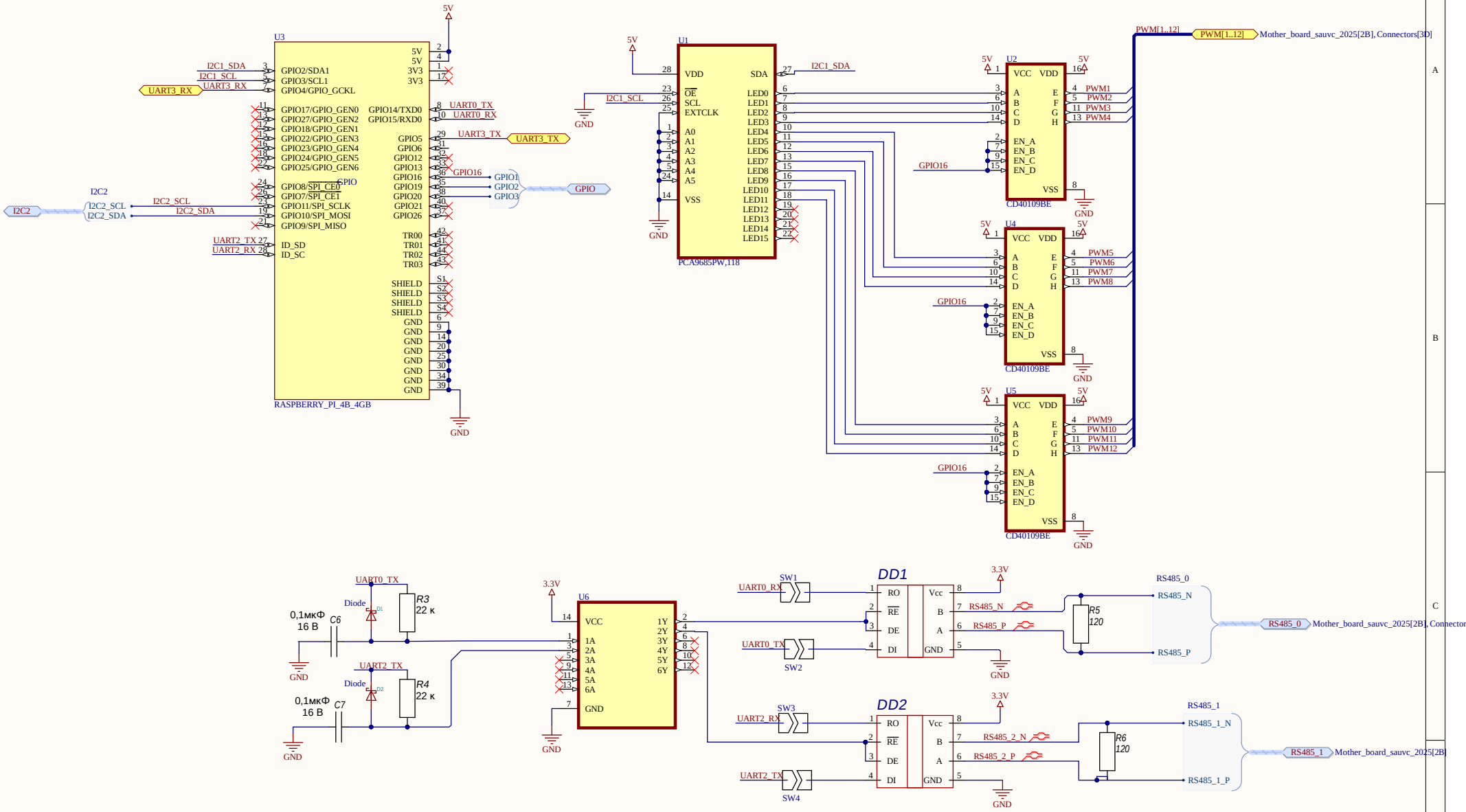

Title		
Size: A3	Number	Revision
Date: 10.05.2024		Sheet of
File: B:\SAUVC_2025\..\RPI.SchDoc		Drawn By:

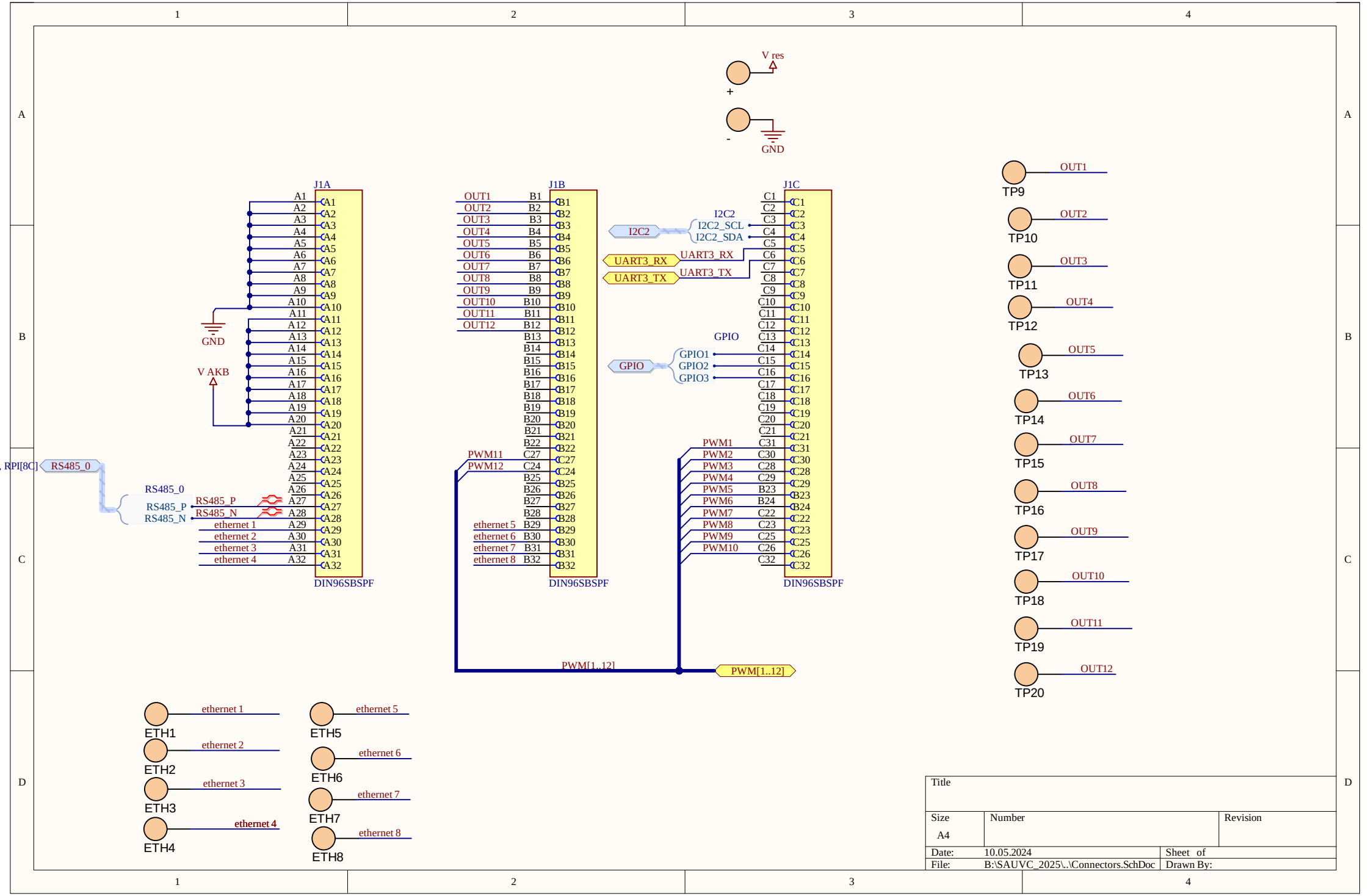
V res
+
-
GND
J1A
J1B
J1C
A1
A2
A3
A4
A5
A6
A7
A8
A9
A10
A11
A12
A13
A14
A15
A16
A17
A18
A19
A20
A21
A22
A23
A24
A25
A26
A27
A28
A29
A30
A31
A32
GND
V AKB
RS485_0
RS485_P
RS485_N
ethernet 1
ethernet 2
ethernet 3
ethernet 4
DIN96SBSPF
OUT1
OUT2
OUT3
OUT4
OUT5
OUT6
OUT7
OUT8
OUT9
OUT10
OUT11
OUT12
B1
B2
B3
B4
B5
B6
B7
B8
B9
B10
B11
B12
B13
B14
B15
B16
B17
B18
B19
B20
B21
B22
B23
B24
B25
B26
B27
B28
B29
B30
B31
B32
PWM11
PWM12
ethernet 5
ethernet 6
ethernet 7
ethernet 8
I2C2
I2C2_SCL
I2C2_SDA
UART3_RX
UART3_TX
GPIO
GPIO1
GPIO2
GPIO3
C1
C2
C3
C4
C5
C6
C7
C8
C9
C10
C11
C12
C13
C14
C15
C16
C17
C18
C19
C20
C21
C22
C23
C24
C25
C26
C27
C28
C29
C30
C31
C32
PWM1
PWM2
PWM3
PWM4
PWM5
PWM6
PWM7
PWM8
PWM9
PWM10
PWM[1..12]
OUT1
TP9
OUT2
TP10
OUT3
TP11
OUT4
TP12
OUT5
TP13
OUT6
TP14
OUT7
TP15
OUT8
TP16
OUT9
TP17
OUT10
TP18
OUT11
TP19
OUT12
TP20
ethernet 1
ETH1
ethernet 2
ETH2
ethernet 3
ETH3
ethernet 4
ETH4
ethernet 5
ETH5
ethernet 6
ETH6
ethernet 7
ETH7
ethernet 8
ETH8
Title
Size
A4
Number
Revision
Date:
10.05.2024
Sheet of
File:
B:\SAUVC_2025\..\Connectors.SchDoc
Drawn By:

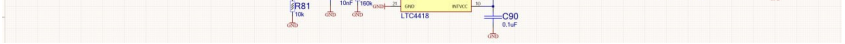

V bat
C5
1000uF
GND
V res
C8
10uF
GND
V AKB
C9
10uF
GND
V res
R10
10K
R11
10K
R12
160K
GND
V res
R7
10K
R8
10K
R9
160K
V AKB
GND
V bat
V bat
V bat
U7
V1
UV1
OV1
V2
UV2
OV2
VS1
G1
VS2
G2
VOUT
VALID1
VALID2
CAS
INTVCC
EN
SHDN
TMR
HYS
GND
GND
LTC4418IUF#TRPBF
V bat
C10
0,1 мкФ
25 В
GND
C11
10 нФ
25 В
GND
R13
160K
GND
GND
V res
VT1
VT2
VT3
VT4
FDS6675BZ
FDS6675BZ
FDS6675BZ
FDS6675BZ
C12
0,1 мкФ
25 В
C13
0,1 мкФ
25 В
V bat
V bat
V AKB
C14
0,1 мкФ
25 В
GND
C15
0,1 мкФ
25 В
GND

Title		
Size A4	Number	Revision
Date: 10.05.2024		Sheet of
File: B:\SAUVC_2025\..\Power_switch.SchDoc		Drawn By:

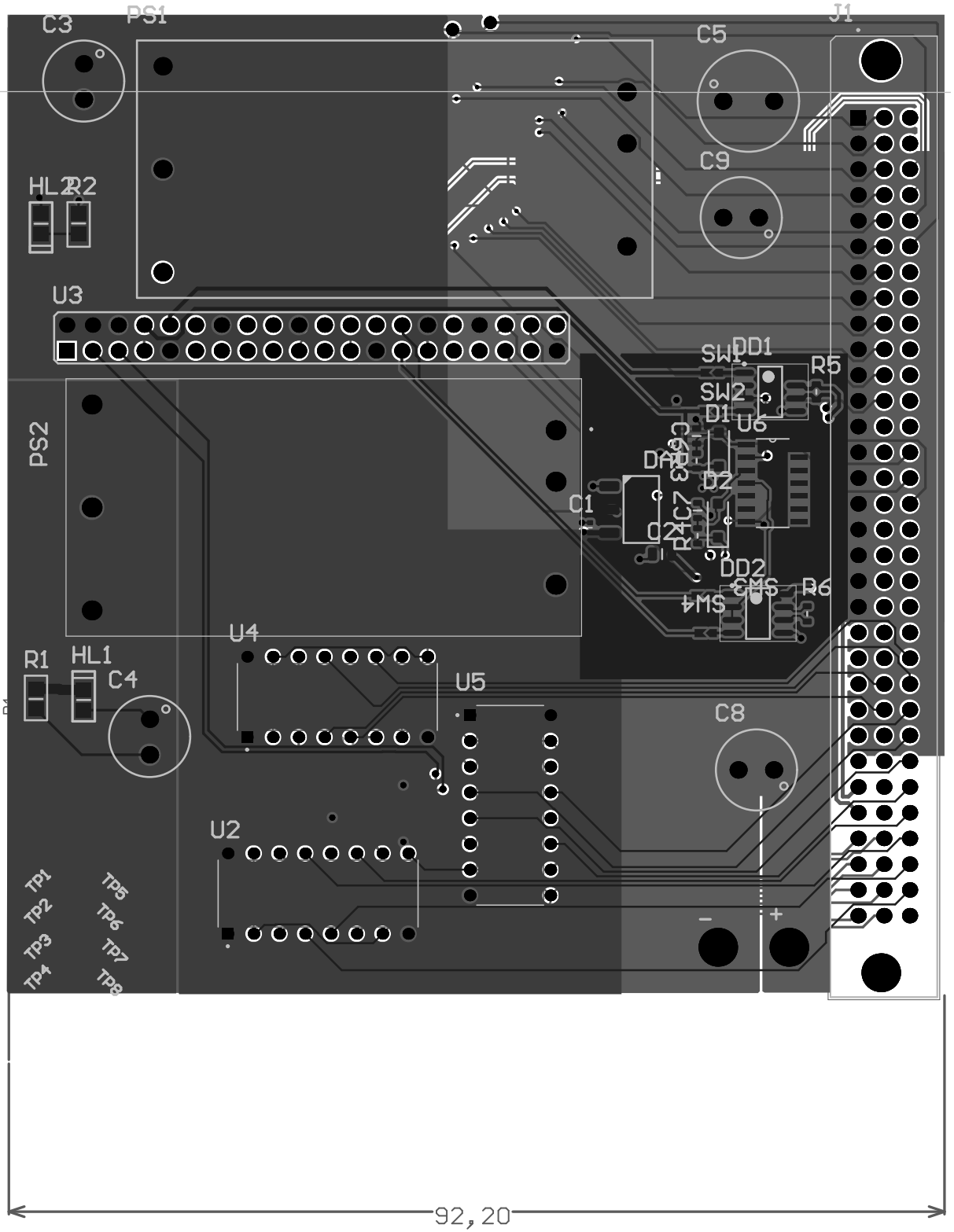
C3
PS1
J1
C5
C9
HL2
R2
U3
SW1
DD1
R5
SW2
D1
U6
PS2
DA1
D2
C1
C2
DD2
R6
U4
R1
HL1
C4
U5
C8
U2
TP1
TP2
TP3
TP4
TP5
TP6
TP7
TP8
92,20

Comment	Description	Designator	Footprint	LibRef	Quantity
TP	Test point	-, +, ETH1, ETH2, ETH3, ETH4, ETH5, ETH6, ETH7, ETH8, TP9, TP10, TP11, TP12, TP13, TP14, TP15, TP16, TP17, TP18, TP19, TP20	TP	TP	22
100 nF	SMD 0603 ; X7R; 0,01 мкФ; 25 В	C1	C0402C	CL05B103KA5NNNC	1
10 мкФ	SMD 0805; X7R; 10 мкФ; 16 В	C2	C0805C	CL21B106KOQNNNE	1
1uF		C3, C4, C8, C9	Capacitor 8x12	Capacitor_pol	4
1uF		C5	Capacitor 10x12	Capacitor_pol	1
0,1мкФ	SMD 0603 ; X7R; 1,5 нФ; 50 В	C6, C7	C0603C	CL10B152KB8NNNC	2
0,1 мкФ	SMD 0402 ; X7R; 0,1 мкФ; 25 В	C10, C12, C13, C14, C15	C0402C	CL05B104KA5NNNC	5
10 нФ	SMD 0402 ; X7R; 0,1 мкФ; 25 В	C11	C0402C	CL05B104KA5NNNC	1
Diode		D1, D2	SOD-123F	Schottky-Diode	2
LD1117S33TR	Linear regulator, 3V3	DA1	SOT-223	LD1117S33TR	1
Value	Half-duplex	DD1, DD2	SOIC8N	MAX3072E	2
Value		HL1, HL2	0805D	LED	2
DIN96SBSPF	DIN 41612 socket, fully populated, 96 contacts, straight PCB mounted, press-fit pins	J1	CINCH_DIN96SBSPF	DIN96SBSPF	1
SKM30A-05	Power Supply	PS1	SKM30A05	SKM30A-05	1
SKM30A-12	Power Supply	PS2	SKM30B12	SKM30A-12	1
Resistor		R1, R2	0805R	Resistor	2
22 к	SMD 0603; 0,1; 1%; 22 кОм	R3, R4	C0603R	RC0603FR-0722KL	2
120	SMD 0603; 0,1; 1%; 120 Ом	R5, R6	C0603R	RC0603FR-07120RL	2
10K	SMD 0603; 0,1; 1%; 59 кОм	R7, R8, R10, R11	C0603R	RC0603FR-0759KL	4
160K	SMD 0603; 0,1; 1%; 59 кОм	R9, R12, R13	C0603R	RC0603FR-0759KL	3
SW2		SW1, SW2, SW3, SW4	SW2	SW2	4
PCA9685PW,118	LED Driver IC 16 Output Linear - PWM Dimming 25mA 28-TSSOP	U1	SOP65P640X110-28N	PCA9685PW,118	1
CD40109BE	Ð§ÐµÑ‚Ñ‹Ñ€ÐµÑ…ÑŠÑÐ´ÐµÑ€Ð½Ñ‹Ð¹ ÐšÐœÐžÐŸ-Ð¿Ñ€ÐµÐ¾Ð±Ñ€Ð°Ð·Ð¾Ð²Ð°Ñ‚ÐµÐ»ÑŒÐ½Ð¸Ð·ÐºÐ¾Ð³Ð¾Ð½Ð°Ð¿Ñ€ÑÐ¶ÐµÐ½Ð¸Ñ Ð² Ð²Ñ‹ÑÐ¾ÐºÐ¾Ðµ (Ð½Ð¾Ð¼Ð¸Ð½Ð°Ð»ÑŒÐ½Ð¾Ðµ Ð½Ð°Ð¿Ñ€ÑÐ¶ÐµÐ½Ð¸Ðµ 20 Ð')	U2, U4, U5	DIP794W45P254L1969H508Q16	CD40109BE	3
RASPBERRY_PI_4B_4GB	BCM2711 Raspberry Pi 4 Model B 4GB - ARMÂ® CortexÂ®-A72 MPU Embedded Evaluation Board	U3	PLD40	RASPBERRY_PI_4B_4GB	1
	Inverter IC 6 Channel Schmitt Trigger 14-SOIC	U6	SOIC127P600X175-14N	74HC14D	1
LTC4418IUF#TRPBF	OR Controller Source Selector Switch P-Channel 2:1 20-QFN _4x4_	U7	QFN50P400X400X80-21N	LTC4418IUF#TRPBF	1
IRF7240PBF	P MOSFET	VT1, VT2, VT3, VT4	SOIC-8	IRF7240PBF	4