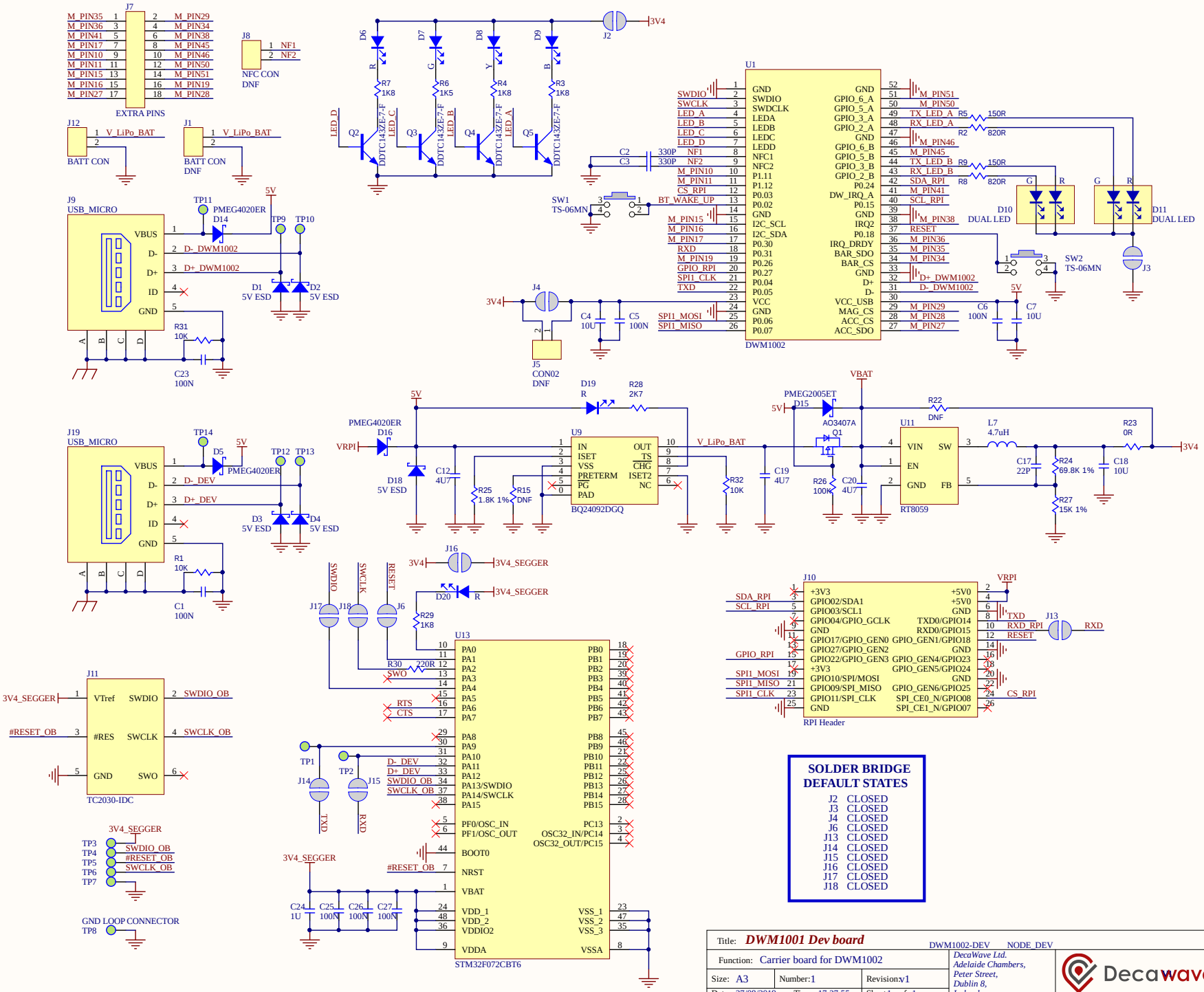

SOLDER BRIDGE DEFAULT STATES

J2	CLOSED
J3	CLOSED
J4	CLOSED
J6	CLOSED
J13	CLOSED
J14	CLOSED
J15	CLOSED
J16	CLOSED
J17	CLOSED
J18	CLOSED

Title:	*DWM1001 Dev board*	DWM1002-DEV NODE_DEV	
Function:	Carrier board for DWM1002	*DecaWave Ltd. Adelaide Chambers, Peter Street, Dublin 8, Ireland.*	Decawave
Size: A3	Number:1	Revision:v1	
Date: 27/08/2019	Time: 17:27:55	Sheet 1 of 1	

This document is Decawave's property, it may not be used, transmitted or reproduced without their approval.