Board Name Fabrication Document

Layer Stack Legend

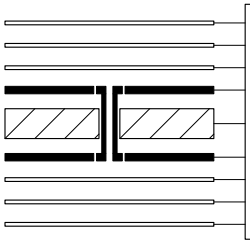

Material	Layer	Thickness	Dielectric	Type	Gerber
	F.Paste			Paste Mask	
	F.Silkscreen		Direct Printing	Legend	GBR
	F.Mask	0.02mm	Solder Resist	Solder Mask	GBR
Copper	**L1 (Sig, PWR)**	**0.07mm (2.00oz)**		**Signal**	**GBR**
Core		1.48mm	FR4_7628	Dielectric	
Copper	**L2 (Sig, PWR)**	**0.07mm (2.00oz)**		**Signal**	**GBR**
	B.Mask	0.02mm	Solder Resist	Solder Mask	GBR
	B.Silkscreen		Direct Printing	Legend	GBR
	B.Paste			Paste Mask	

Total thickness: 1.66mm
Note: external layer thicknesses are specified after plating

Top Fabrication (Scale 1:1)

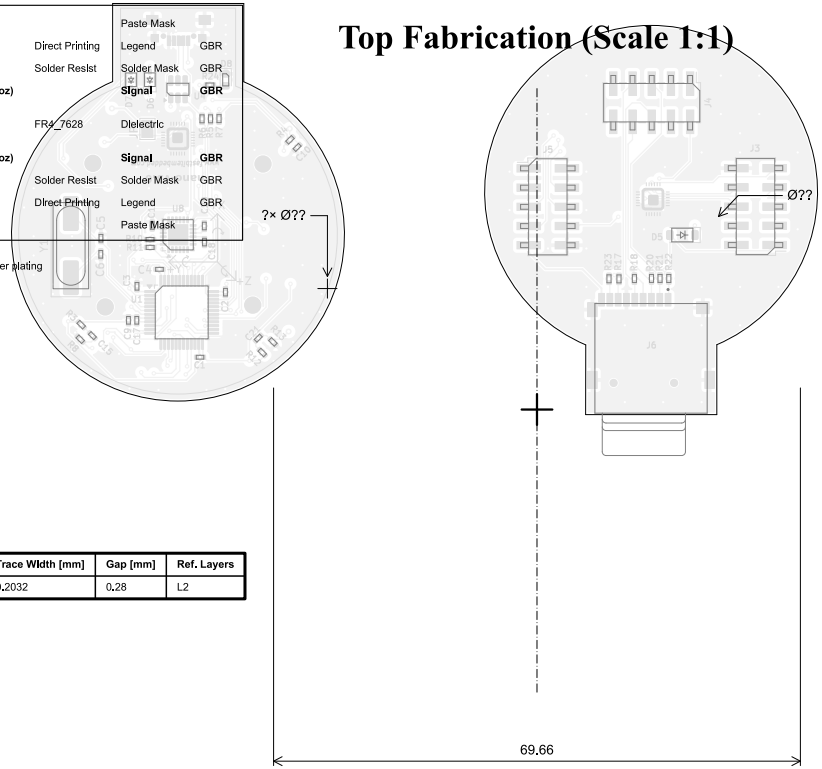

Impedance Table

Transmission Line	Impedance [ohms]	Tolerance [ohms]	Layer	Trace Width [mm]	Gap [mm]	Ref. Layers
Edge-Coupled Coated Microstrip	100	±10 %	L1	0.2032	0.28	L2

FABRICATION NOTES (UNLESS OTHERWISE SPECIFIED)

1) FABRICATE PER IPC-6012A CLASS 2.

2) OUTLINE DEFINED IN SEPARATE GERBER FILE WITH "Edge_Cuts.GBR" SUFFIX.

   DIMENSIONS OF CIRCUMSIZED RECTANGLE SHOWN ON THIS DRAWING FOR REFERENCE ONLY.

3) SEE SEPARATE DRILL FILES WITH ".DRL" SUFFIX FOR HOLE LOCATIONS.

   SELECTED HOLE LOCATIONS SHOWN ON THIS DRAWING FOR REFERENCE ONLY.

4) SURFACE FINISH: IMMERSION GOLD

5) SOLDERMASK ON BOTH SIDES OF THE BOARD SHALL BE LPI, COLOR BLACK.

6) SILK SCREEN LEGEND TO BE APPLIED PER LAYER STACKUP USING YELLOW NON-CONDUCTIVE EPOXY INK.

7) ALL VIAS ARE TENTED ON BOTH SIDES UNLESS SOLDERMASK OPENED IN GERBER.

8) VENDOR SHOULD FOLLOW ROHS COMPLIANT PROCESS AND Pb FREE FOR MANUFACTURING

9) PCB MATERIAL REQUIREMENTS:

   A. FLAMMABILITY RATING MUST MEET OR EXCEED UL94V-0 REQUIREMENTS.
   B. Tg 170 C OR EQUIVALENT.
   C. EQUIVALENT MATERIAL SHALL BE RoHS COMPLIANT, HALOGEN FREE AND APPROVED BY COMPANY NAME.

10) DESIGN GEOMETRY MINIMUM FEATURE SIZES:

BOARD SIZE	106.576 × 54.371 mm
BOARD THICKNESS	1.660 mm
TRACE WIDTH	0.165 mm
TRACE TO TRACE	0.160 mm
MIN. HOLE (PTH)	0.250 mm
MIN. HOLE (NPTH)	0.650 mm
ANNULAR RING	0.150 mm
COPPER TO HOLE	0.254 mm
COPPER TO EDGE	0.250 mm
HOLE TO HOLE	0.254 mm

11) REFER TO IMPEDANCE TABLE FOR IMPEDANCE CONTROL REQUIREMENTS.

12) CONFIRM SPACE WIDTHS AND SPACINGS.

All dimensions are in millimeters unless otherwise specified.

Comments:	Company: **Company Name**		Variant: CHECKED	Git Hash: 70a9578
	Board Name: **Board Name**		Project Name: **Project Name**	
Sheet Title: Top Fabrication (Scale 1:1)	File Name: Swasthik_KiBot_Project.kicad_pcb	Designer: Author	Date: 2024-04-13	Revision: + (Unreleased)
Sheet Path:		Reviewer:	Size: **A4**	Sheet: **1** of **8**

Board Name Fabrication Document

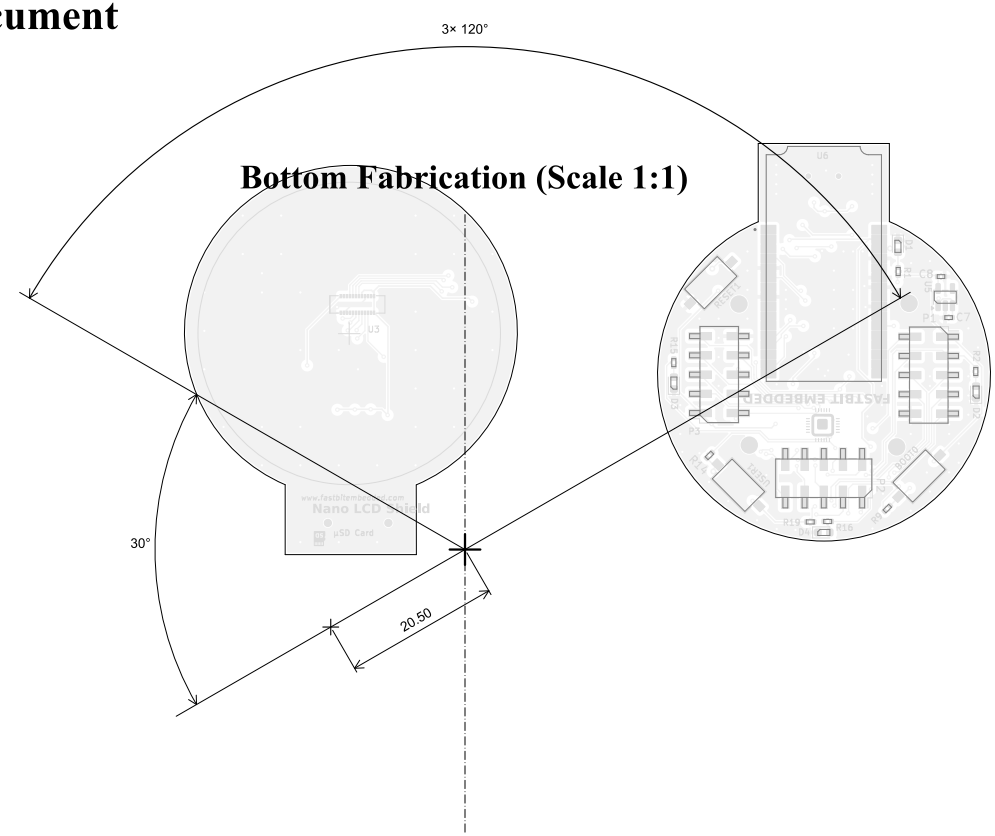

All dimensions are in millimeters unless otherwise specified.

Comments:	Company: **Company Name**		Variant: CHECKED	Git Hash: 70a9578
	Board Name: **Board Name**		Project Name: **Project Name**	
Sheet Title: Bottom Fabrication (Scale 1:1)	File Name: Swasthik_KiBot_Project.kicad_pcb	Designer: Author	Date: 2024-04-13	Revision: + (Unreleased)
Sheet Path:		Reviewer:	Size: **A4**	Sheet: **2** of **8**

Board Name Fabrication Document

Drill Table

Symbol	Count	Hole Size	Plated	Hole Shape	Drill Layer Pair	Hole Type
×	6	0.25mm (9.84mils)	PTH	Round	L1 (Sig, PWR) - L2 (Sig, PWR)	Via
○	191	0.30mm (11.81mils)	PTH	Round	L1 (Sig, PWR) - L2 (Sig, PWR)	Via
+	3	0.40mm (15.75mils)	PTH	Round	L1 (Sig, PWR) - L2 (Sig, PWR)	Via
	Total 200					

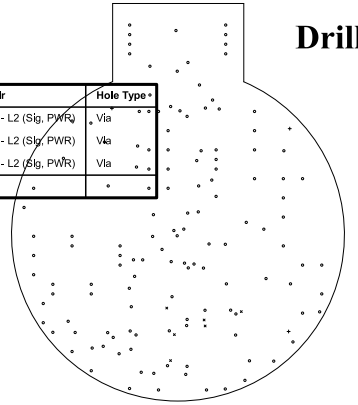

Drill Drawing L1 - L2 (Scale 1:1)

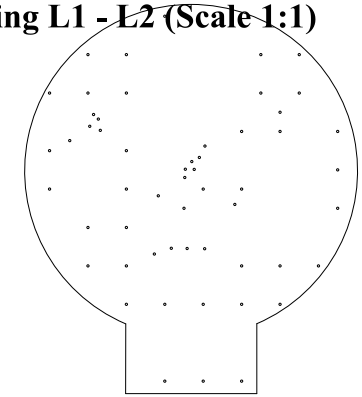

Comments:	Company: **Company Name**		Variant: CHECKED	Git Hash: 70a9578
	Board Name: **Board Name**		Project Name: **Project Name**	
Sheet Title: Drill Drawing (L1 - L2)	File Name: Swasthik_KiBot_Project.kicad_pcb	Designer: Author	Date: 2024-04-13	Revision: + (Unreleased)
Sheet Path:		Reviewer:	Size: **A4**	Sheet: **3** of **8**

Board Name Fabrication Document

Drill Table

Symbol	Count	Hole Size	Plated	Hole Shape	Drill Layer Pair	Hole Type
×	2	0.65mm (25.59mils)	NPTH	Round	L1 (Sig, PWR) - L2 (Sig, PWR)	Mechanical
○	2	1.00mm (39.37mils)	NPTH	Round	L1 (Sig, PWR) - L2 (Sig, PWR)	Mechanical
+	4	2.20mm (86.61mils)	NPTH	Round	L1 (Sig, PWR) - L2 (Sig, PWR)	Mechanical
	Total 8					

Drill Drawing L1 - L2 (Scale 1:1)

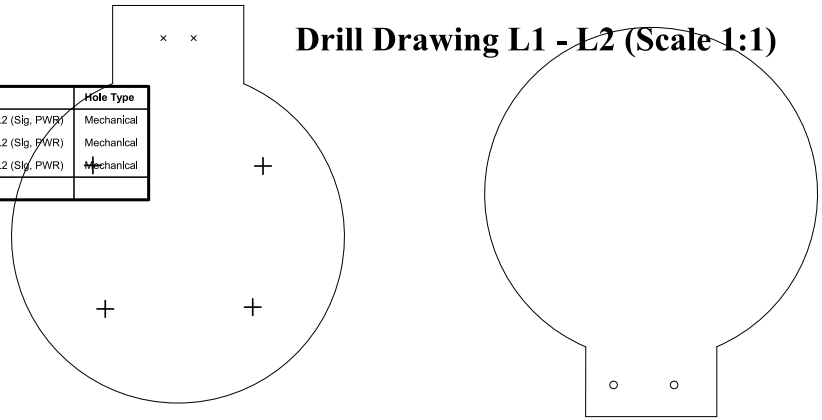

Comments:	Company: **Company Name**		Variant: CHECKED	Git Hash: 70a9578
	Board Name: **Board Name**		Project Name: **Project Name**	
Sheet Title: Drill Drawing (L1 - L2)	File Name: Swasthik_KiBot_Project.kicad_pcb	Designer: Author	Date: 2024-04-13	Revision: + (Unreleased)
Sheet Path:		Reviewer:	Size: A4	Sheet: 4 of 8

Board Name Fabrication Document

Top Test Points (Scale 1:1)

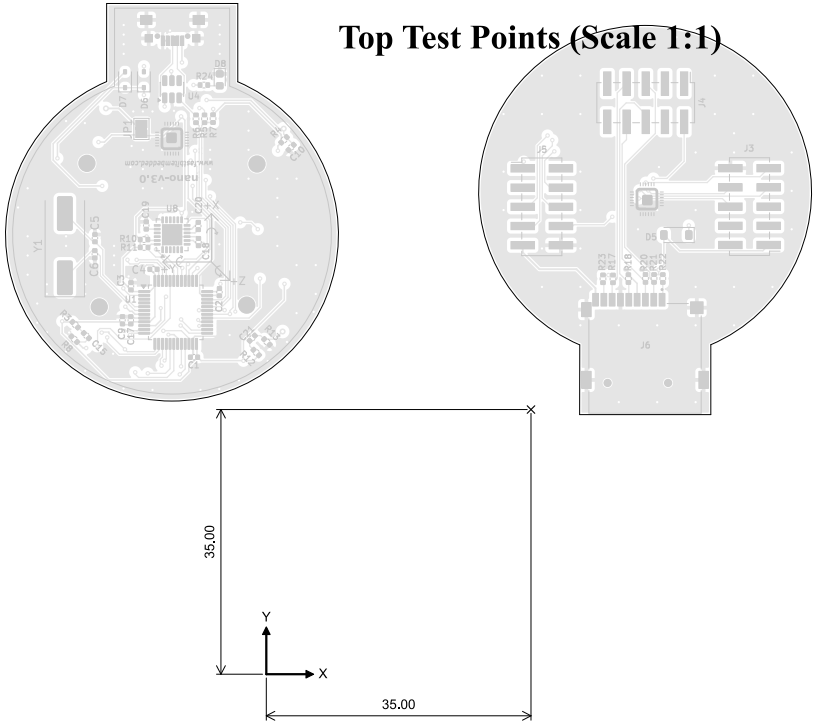

Ref.	Net	X [mm]	Y [mm]

Ref.	Net	X [mm]	Y [mm]

All dimensions are in millimeters unless otherwise specified.

Comments:	Company: **Company Name**		Variant: CHECKED	Git Hash: 70a9578
	Board Name: **Board Name**		Project Name: **Project Name**	
Sheet Title: Top Test Points (Scale 1:1)	File Name: Swasthik_KiBot_Project.kicad_pcb	Designer: Author	Date: 2024-04-13	Revision: + (Unreleased)
Sheet Path:		Reviewer:	Size: **A4**	Sheet: **5** of **8**

Board Name Fabrication Document

Bottom Test Points (Scale 1:1)

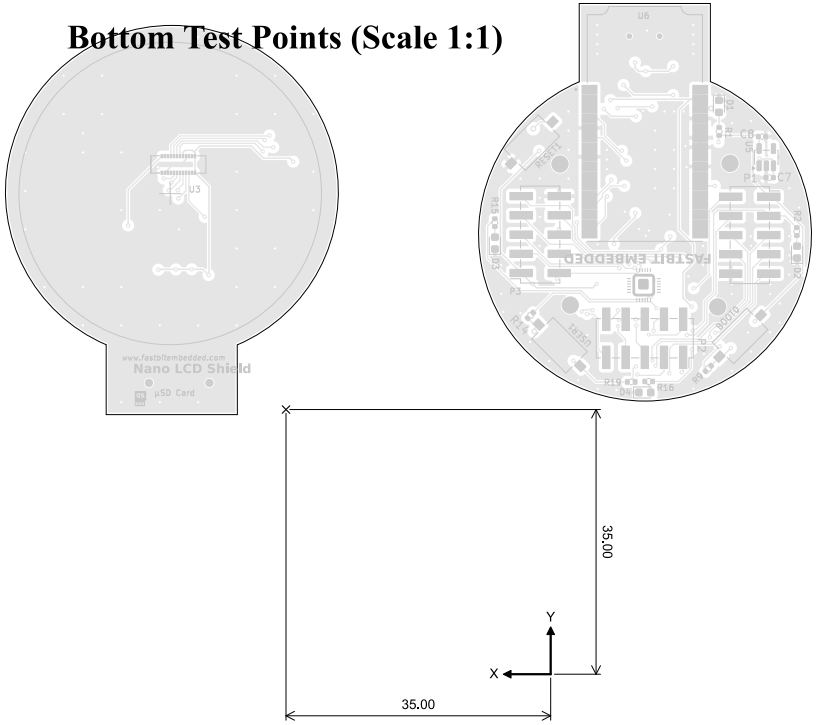

Ref.	Net	X [mm]	Y [mm]

All dimensions are in millimeters unless otherwise specified.

Comments:	Company: Company Name		Variant: CHECKED	Git Hash: 70a9578
	Board Name: Board Name		Project Name: Project Name	
Sheet Title: Bottom Test Points (Scale 1:1)	File Name: Swasthik_KiBot_Project.kicad_pcb	Designer: Author	Date: 2024-04-13	Revision: + (Unreleased)
Sheet Path:		Reviewer:	Size: A4	Sheet: 6 of 8

Board Name Fabrication Document

L1 (Sig, PWR) (Scale 1:1)

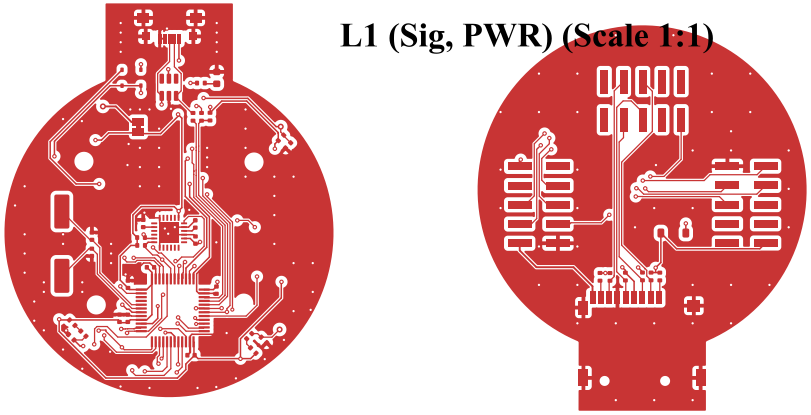

Comments:	Company: **Company Name**		Variant: CHECKED	Git Hash: 70a9578
	Board Name: **Board Name**		Project Name: **Project Name**	
Sheet Title: L1 (Sig, PWR) (Scale 1:1)	File Name: Swasthik_KiBot_Project.kicad_pcb	Designer: Author	Date: 2024-04-13	Revision: + (Unreleased)
Sheet Path:		Reviewer:	Size: **A4**	Sheet: **7** of **8**

Board Name Fabrication Document

L2 (Sig, PWR) (Scale 1:1)

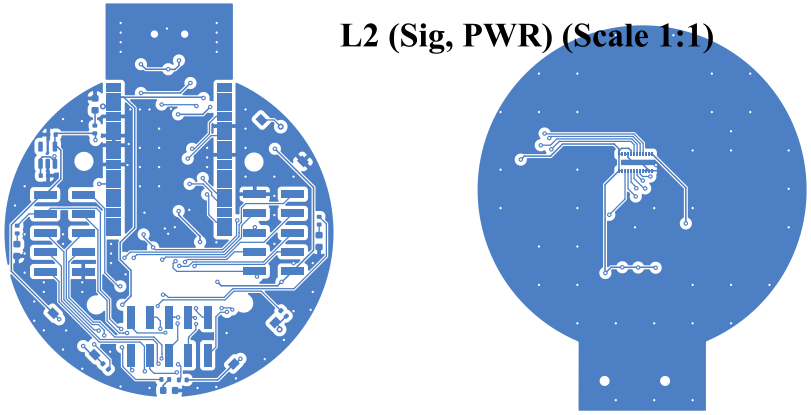

Comments:	Company: **Company Name**		Variant: CHECKED	Git Hash: 70a9578
	Board Name: **Board Name**		Project Name: **Project Name**	
Sheet Title: L2 (Sig, PWR) (Scale 1:1)	File Name: Swasthik_KiBot_Project.kicad_pcb	Designer: Author	Date: 2024-04-13	Revision: + (Unreleased)
Sheet Path:		Reviewer:	Size: **A4**	Sheet: **8** of **8**