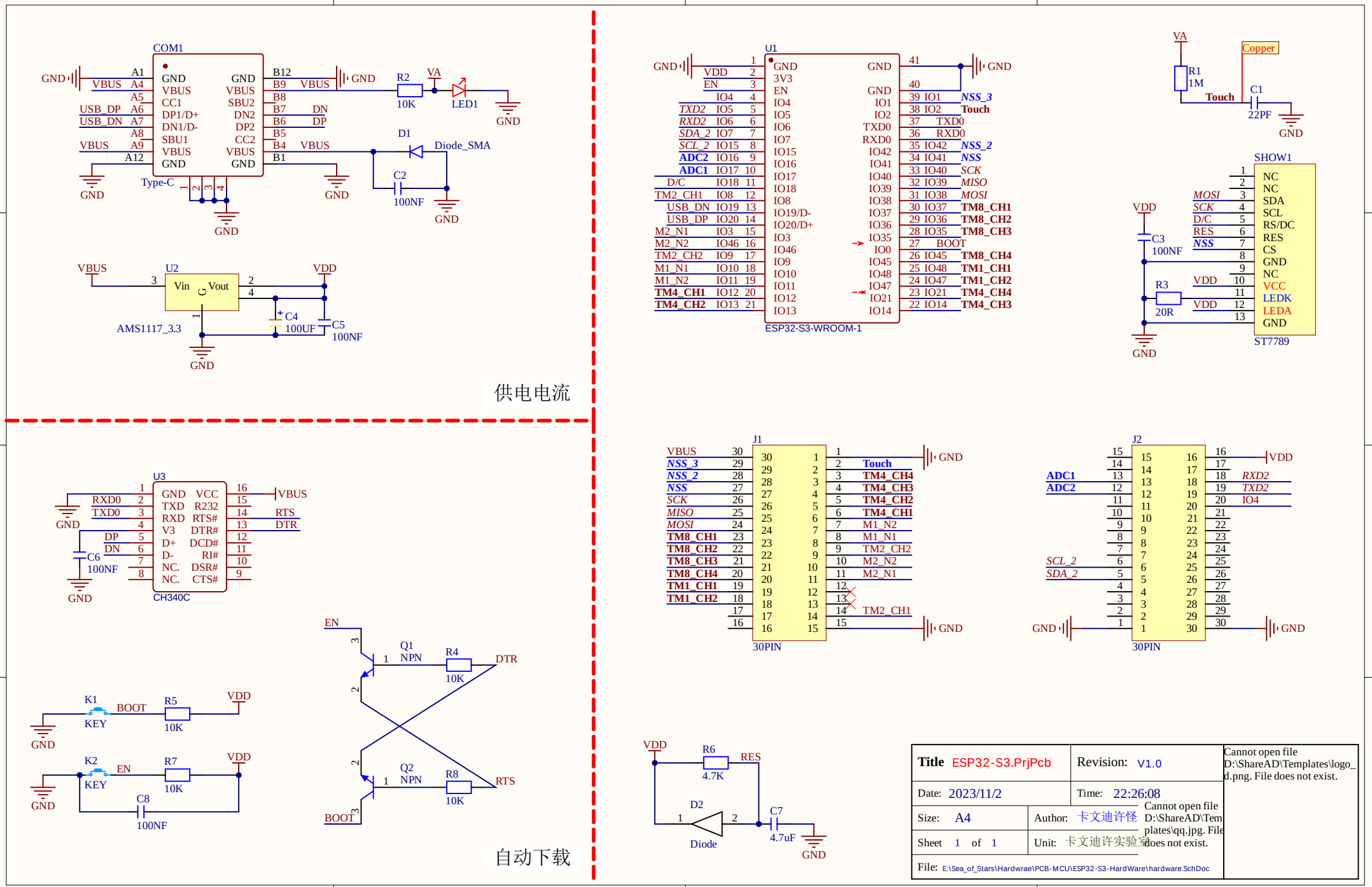
COM1
Type-C
GND
VBUS
USB_DP
USB_DN
DP1/D+
DN1/D-
SBU1
CC1
CC2
SBU2
DN2
DP2
B12
B9
B8
B7
B6
B5
B4
B1
DN
DP
R2
10K
VA
LED1
D1
Diode_SMA
C2
100NF
U2
Vin
Vout
VDD
AMS1117_3.3
C4
100UF
C5
100NF
供电电流
U1
ESP32-S3-WROOM-1
3V3
EN
IO4
TXD2
RXD2
SDA_2
SCL_2
ADC2
ADC1
D/C
TM2_CH1
USB_DN
USB_DP
M2_N1
M2_N2
TM2_CH2
M1_N1
M1_N2
TM4_CH1
TM4_CH2
IO5
IO6
IO7
IO15
IO16
IO17
IO18
IO8
IO19/D-
IO20/D+
IO3
IO46
IO9
IO10
IO11
IO12
IO13
IO14
IO21
IO47
IO48
IO45
IO0
IO35
IO36
IO37
IO38
IO39
IO40
IO41
IO42
TXD0
RXD0
IO1
IO2
NSS_3
Touch
NSS_2
NSS
SCK
MISO
MOSI
TM8_CH1
TM8_CH2
TM8_CH3
BOOT
TM8_CH4
TM1_CH1
TM1_CH2
TM4_CH4
TM4_CH3
Copper
R1
1M
C1
22PF
SHOW1
ST7789
NC
SDA
SCL
RS/DC
RES
CS
VCC
LEDK
LEDA
C3
100NF
R3
20R
U3
CH340C
GND
VCC
TXD
RXD
V3
D+
D-
NC.
R232
RTS#
DTR#
DCD#
RI#
DSR#
CTS#
RXD0
TXD0
DP
DN
C6
100NF
RTS
DTR
J1
30PIN
TM4_CH4
TM4_CH3
TM4_CH2
TM4_CH1
M1_N2
M1_N1
TM2_CH2
M2_N2
M2_N1
TM2_CH1
J2
RXD2
TXD2
IO4
K1
KEY
R5
10K
K2
R7
C8
100NF
Q1
NPN
R4
Q2
R8
R6
4.7K
D2
Diode
C7
4.7uF
Title ESP32-S3.PrjPcb
Revision: V1.0
Date: 2023/11/2
Time: 22:26:08
Size: A4
Author: 卡文迪许怪
Sheet 1 of 1
Unit: 卡文迪许实验室
File: E:\Sea_of_Stars\Hardwrae\PCB-MCU\ESP32-S3-HardWare\hardware.SchDoc
Cannot open file D:\ShareAD\Templates\logo_d.png. File does not exist.
Cannot open file D:\ShareAD\Templates\qq.jpg. File does not exist.

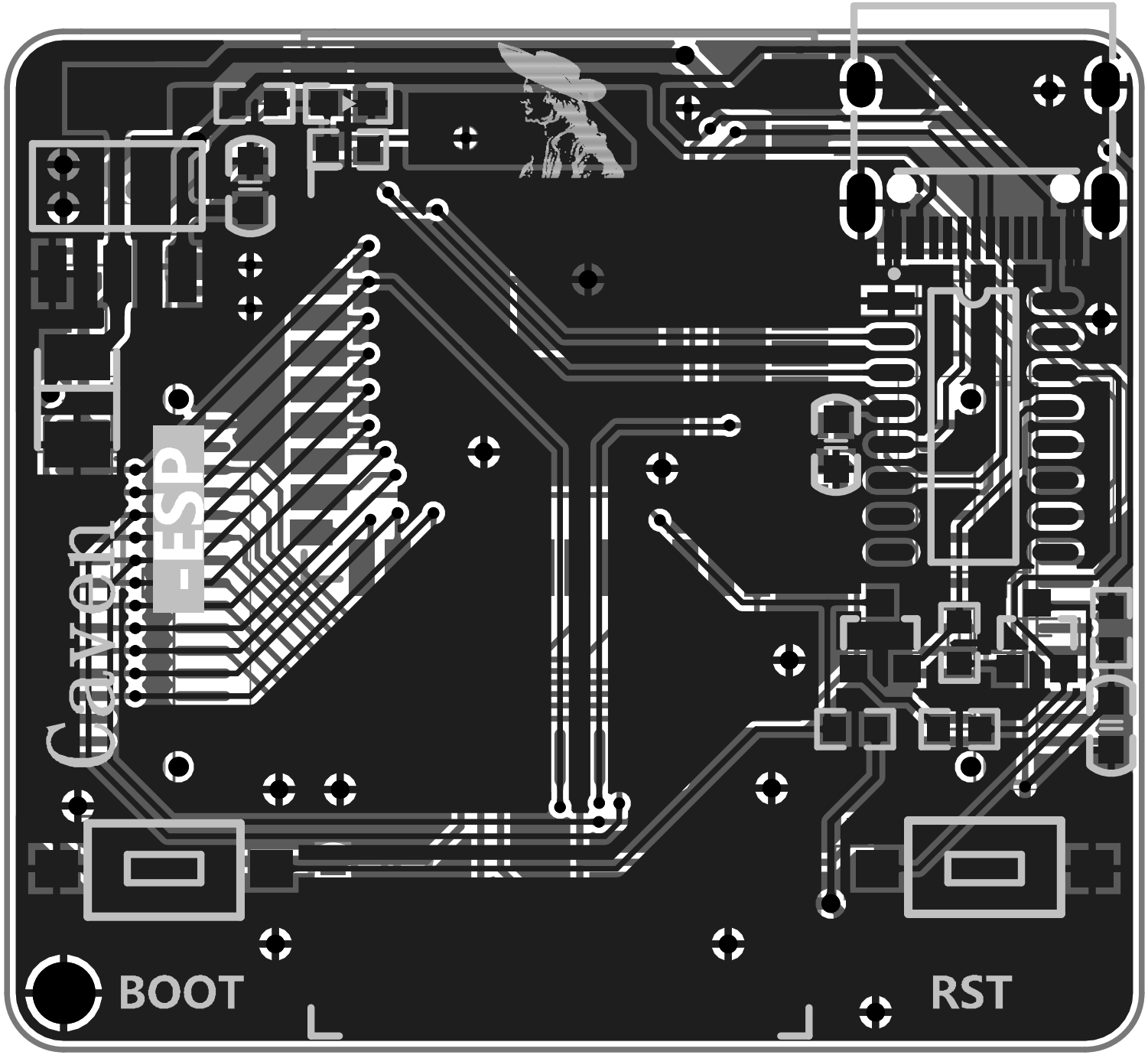
Caven
-ESP
BOOT
RST