# ENGR 482 – Soft Robotic Bottle-Cap Gripper and Twister

**Final Technical Report**

---

# 1. Introduction

Opening a bottle cap may seem simple, but it is a challenging mechanical problem. The cap is small, and it requires a certain amount of torque to open. At the same time, too much force can damage the cap or cause slipping. Because of this, the system must control both grip force and twisting motion carefully.

Soft robotics is a good solution to this problem. Soft materials can adapt to the shape of the cap and spread the force more evenly. This helps reduce slipping and damage. It also makes the system safer and more reliable.

In this project, we designed a soft robotic system that includes an inflatable ring gripper and a fibre-reinforced twisting actuator. The system uses water pressure to grip and twist the bottle cap.

The goal of this project is to grip and twist a bottle cap using only soft actuation. The system must also work safely and repeat the task many times without failure.

---

# 2. Problem Definition and Performance Requirements

## 2.1 Target Object

The target object is a standard plastic bottle cap with a diameter of about 28 mm. The cap is made of polymer and has threads that require torque to open or close.

## 2.2 Required Actions

To complete the task, the system must follow a clear sequence. First, it must align with the bottle cap. Then, it must grip the cap securely. After that, it must apply a twisting motion. Finally, it must release the cap.

## 2.3 Performance Specifications

The system must meet several performance requirements.

For grip force, the system must apply enough force to prevent slipping. At the same time, the force must not be too high, or it may damage the cap.

For torque, the system must generate enough twisting force to open the cap. Based on typical bottle caps, the required torque is about 0.3 to 0.6 Nm.

For angular motion, the system should rotate the cap between 180° and 360°. This is enough to open or close the cap fully.

For task speed, the system should complete one full cycle within a few seconds.

For repeatability, the system should perform the task multiple times with consistent results.

---

# 3. Concept Generation

To solve the problem, we developed three different design concepts. Each concept uses soft materials, but they generate grip and twisting motion in different ways. We compared them based on how well they grip the cap, how much torque they can produce, and how easy they are to control.

- Concept 1 – Soft Finger Gripper + Separate Twister
    - In this concept, the system uses three or four soft fingers to grip the bottle cap. Each finger is made of silicone and bends inward when water pressure is applied. This allows the fingers to wrap around the cap and create contact. After gripping, a separate twisting actuator rotates the cap. The gripper and the twisting unit are two different parts. This design is simple and easy to build. It also allows flexible movement because each finger can deform independently. However, the contact between the fingers and the cap is not uniform. This can lead to uneven force distribution, which increases the risk of slipping. In addition, the alignment between the gripper and the cap must be very accurate, or the system may fail.

- Concept 2 – Inflatable Ring Gripper + Fibre-Reinforced Twister
    - In this concept, the gripper is a soft circular ring that surrounds the bottle cap. The ring contains a sealed chamber filled with water. When pressure is applied, the ring expands inward and presses evenly on the cap. Because the contact is uniform around the entire surface, the grip is more stable. This reduces the chance of slipping and improves performance. For twisting, a fibre-reinforced actuator is connected to the gripper. The actuator is wrapped with fibres at an angle. When water pressure is applied, the actuator expands and creates both axial contraction and rotational motion. This produces a controlled twisting action. This design provides both a strong grip and reliable torque. It is also easier to model because the motion is more predictable. For these reasons, this concept was selected as the final design.

- Concept 3 – Multi-Chamber Bending Actuator System
    - In this concept, the system uses a soft actuator with multiple internal chambers. Each chamber can be pressurized separately. When different chambers are activated, the actuator bends in a controlled way. The gripper wraps around the bottle cap as it bends. At the same time, uneven pressure in the chambers can create a twisting motion. This design is highly flexible and can adapt to different shapes. However, it is more complex to control because it requires multiple pressure inputs. It is also harder to predict the motion and harder to model. Because of this, the system may be less reliable during repeated use.

All three concepts can grip and twist the bottle cap, but they perform differently. Concept 1 is simple and easy to build, but the grip is not uniform, so slipping may occur during operation. Concept 3 is flexible and can adapt to different shapes, but it is harder to control and more difficult to model, which may reduce reliability. In comparison, Concept 2 provides a uniform grip around the cap and produces stable and controlled torque. It is also easier to analyze and predict. Because of this, Concept 2 offers the best balance between performance, simplicity, and reliability, so it was selected as the final design.

---

# 4. Concept Selection

| Criteria | Weight | Concept 1 | Concept 2 | Concept 3 |
|---|---|---|---|---|
| Grip capability | 0.25 | 3 | 4 | 4 |
| Torque generation | 0.25 | 3 | 4 | 3 |
| Soft compliance | 0.15 | 4 | 5 | 5 |
| Modeling feasibility | 0.15 | 3 | 4 | 2 |
| Reliability | 0.20 | 3 | 4 | 3 |

**Total Score:**

- Concept 1 = 3.20
- Concept 2 = 4.15
- Concept 3 = 3.45

Concept 2 has the highest score, but the difference is not very large. This shows that all three concepts are possible, but Concept 2 performs better overall.

Concept 1 is simple, but the grip is not uniform, so slipping may happen. Concept 3 can adapt well to the shape, but it is harder to control and model. In comparison, Concept 2 provides a more stable grip and better control of torque. It is also easier to analyze, which improves reliability.

Because of this, Concept 2 gives a better balance between performance, control, and simplicity, so it was selected as the final design.

---

# 5. Final Mechanical Design

## 5.1 System Overview

The final system has two main parts that work together to open the bottle cap. One part is used for gripping, and the other part is used for twisting. Both parts are driven by water pressure.

First, the gripper holds the bottle cap firmly. Then, the twisting actuator rotates the cap to open or close it. At the same time, a fixed holder is used to keep the bottle in place so it does not move during operation.

This setup makes the system more stable and helps ensure that the motion is applied only to the cap.

---

## 5.2 Inflatable Ring Gripper

The gripper is designed as a soft circular ring made of silicone. Inside the ring, there is a sealed chamber filled with water. When pressure is applied, the ring expands inward and presses against the bottle cap.

Because the ring surrounds the cap, the contact is evenly distributed. This helps increase friction and reduce slipping. At the same time, the soft material prevents damage to the cap.

The amount of grip depends on the pressure applied. By controlling the pressure, the system can adjust the grip force based on the task.[9]

---

## 5.3 Fiber-Reinforced Twisting Actuator

The twisting actuator is a soft cylindrical structure. It is wrapped with fibers at an angle, usually between 30° and 45°.

When water pressure is applied, the actuator expands. However, the fibers limit how it expands. Because of this, the actuator shortens and twists at the same time. This creates a rotational motion.

The amount of twisting depends on the pressure and the fiber angle. This makes it possible to control the rotation by adjusting the pressure.

---

## 5.4 Bottle Alignment System

To make sure the system works properly, the bottle must stay in the correct position. For this reason, a fixed holder is used.

The holder keeps the bottle stable and prevents it from rotating. This allows the twisting motion to act only on the cap. It also helps improve repeatability and reduces errors during operation.

---

# 6. Analytical Performance Calculations

## 6.0 Kinematic Analysis

The motion of this system is defined by two primary degrees of freedom (DoF): radial deformation of the ring gripper and rotational force of the fiber reinforced actuator.

The system operates through three sequential phases:

1. **Open State:** No pressure is applied and the gripper remains in the neutral or rest position.
2. **Grasping Phase:** Hydraulic pressure is applied to the ring, causing inward radial deformation and contact with the bottle cap.
3. **Twisting Phase:** Pressure is applied to the twisting actuator, producing rotational deformation and motion.

The radial deformation of the gripper is estimated to produce an inward displacement of approximately 2–5 mm as pressure varies and material stretches. This is enough to create a solid contact with a standard bottle cap. The twisting actuator is designed so that we can achieve an angular displacement within the range of 180°–360°. Deformation of the soft material is controlled by hydraulic pressure, which produces elastic behavior in the silicone structure according to theorized behaviour. For modeling purposes, the relationship between pressure and deformation is approximated as linear during operation. The direction of motion is defined by gripper and twister geometry.

## 6.1 Grip Force

The grip force depends on the internal pressure and the contact area between the gripper and the cap. It can be estimated using:

$$F = P \times A$$

Here, P is the water pressure inside the gripper, and A is the contact area.

For this design, we assume a pressure range of about 30–60 kPa. The contact area is estimated based on the size of the cap. Since the cap diameter is about 28 mm, the contact area is approximately:

$$A = 2.5 * 10^{-3} m^2$$

Using these values, the grip force is in the range of:

$$F = 75N - 150N$$

This range is enough to prevent slipping while still being safe for the cap.

However, the gripping force must not only create contact but also prevent slipping during the twisting process. The friction force at the interface is given by:

$$F_{friction} = \mu * F_{normal}$$

where μ is the coefficient of friction between the gripper and the bottle cap.

To ensure proper operation, the friction force must be sufficient to prevent slipping when torque is applied. If the friction is too low, the gripper will slide rather than rotate the cap.

---

## 6.2 Torque Requirement

The torque needed to open the cap depends on the force and the radius of the cap. It can be estimated using:

$$\tau = r * F * \mu$$

In this equation, μ is the coefficient of friction, F is the normal gripping force, and r is the radius of the bottle cap.

This is higher than the typical requirement of 0.3–0.6 Nm, which means the system can generate enough torque to open the cap.

## 6.3 Twisting Actuator Behavior

The twisting motion of the actuator depends on the applied pressure. A simple relationship can be written as:

$$\theta = k * P$$

This means that when the pressure increases, the rotation angle also increases. The value of k depends on the actuator design, including the fiber angle and geometry.

In this system, the fiber angle is between 30° and 45°, which allows both contraction and twisting. As a result, the actuator can produce smooth and controlled rotation.

---

## 6.4 Torque Output of Twisting Actuator

The torque produced by the actuator can also be related to pressure:

$$\tau = k_t * P$$

Here $k_t$ is a constant that depends on the actuator design.

Based on the pressure range used in this system, the actuator is expected to produce torque within the required range. This shows that the design is capable of meeting the torque needed to open the bottle cap.

---

## 6.5 Force Control and Precision

The use of hydraulic actuation allows precise control over the forces applied by the system by carefully regulating pressure within the actuators.. By regulating the input pressure, the gripping force and twisting torque can be finely adjusted to desired requirement.

This enables the system to apply sufficient force to securely grip and rotate the bottle cap while avoiding extra pressure that could cause damage to the system. On top of that, due to the properties of water, we can have a stronger force response for the same pressure when compared a pneumatic actuator.[10]

---

# 7. Proposed Fabrication Process

This section outlines the manufacturing and assembly method we will use to fabricate the soft robotic gripping and twisting system. The following methods ensure feasibility using standard laboratory resources and equipment.

## 7.1 Materials Selection

Both the gripper and the twisting actuator will be fabricated using soft elastomers. More specifically we will use a platinum cure silicone elastomer (Ecoflex 00-30). The reason for this material choice lies in the ability for the material to be highly flexible, stretching many times its original size as well as bouncing back to its original form without distortion. Because of these properties, it has been commonly used in soft robotics and therefore the material has been well tested and documented for this specific purpose.

When looking at the twisting actuator, we want to be able to put in reinforcement material. This is so that the expansion is constrained and it can induce the torsional deformation that we need to produce our twisting motion.

## 7.2 Fabrication of the Inflatable Ring Gripper

Step 1:

We use a two part mold design using CAD to define the ring geometry and the internal water chamber. The mold will be designed using CAD to model and 3D printed using rigid plastic.

Step 2:

We will apply the mold release to the inside of the 3D printed molds. Once we have that, we can assemble the two halves together. Then we want to insert a removable core inside so that we can form the area for the water to be pumped into.

Step 3:

We want to mix the silicone elastomer, in this case the Ecoflex 00-30, according to specifications and then pour the silicone into the mold. Allow it to cool at room temp for a couple hours.

Step 4:

Remove the 3D printed outer shell and extract the internal core to create the internal water chamber we need.

Step 5:

Insert our tubing into the water chamber inlet making sure to create a water tight seal using additional silicone or adhesive where needed. All connections need to be watertight to prevent leakage.

## 7.3 Fabrication of the Twisting Actuator

Step 1:

Similar to the ring mold, we want to create a cylindrical silicone tube using a tubular mold.

Step 2:

Wrap nylon thread helically around the tube maintaining a constant angle. This serves two purposes: constrain radial expansion of the tube and enables the torsional motion during pressurization

Step 3:

Once the fibers are in place, we want to add another outer layer of silicone to secure the thread in place. Again, allow it to cure at room temperature for a couple of hours.

Step 4:

We then want to seal one end of the cylinder and connect the other end to the tubing that connects to the water supply. Again, using silicone and adhesives where necessary to ensure sealed fits.

## 7.4 Assembly

The system is then assembled together. The inflatable ring is attached to the sealed end of the twisting actuator. The other end of the twisting actuator with the tubing is attached to the frame that then lets it “hang” from the top of the frame. The frame extends down and below the actuator where we have guides that ensure the bottle is placed directly underneath the gripper. The connections are designed so that the twisting motion and gripping motion are pressurized independently.

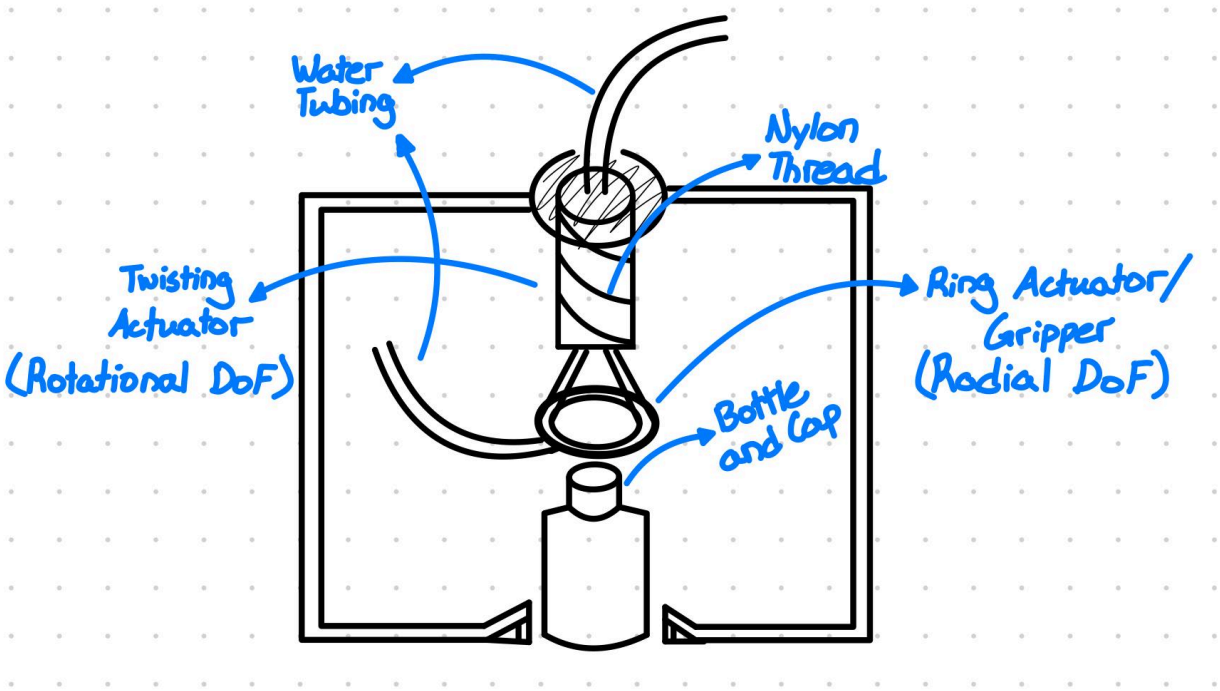


Figure [1] - Concept drawing of system design

## 7.5 Manufacturing Considerations

- Tolerances: Ensure proper fit and gripping of the gripper and bottle cap
- Sealing: All tubing connections need to be sealed water tight
- Material thickness: Must balance flexibility while also ensuring structural integrity of actuators
- Fiber Consistency: Ensuring uniform integration of thread wrapping to produce repeatable and predictable behaviour

## 7.6 Feasibility

This design only requires the following tools and processes:

- 3D printer
- Silicone Casting
- Basic Assembly tools

These are widely accessible in any academic lab environment and therefore makes sure the design is manufacturable.

---

# 8. Control Strategy

Here we will look at how to control this gripping and twisting soft robot.

## 8.1 System Overview

The system consists of two independently controlled subsystems, the reinforced twisting actuator which supplies the rotational motion, and the inflatable ring gripper which supplies the radial gripping force. Each of these subsystems is hydraulically powered and operated and therefore, the control comes in when looking at volume and pressure of fluid inserted into each actuator.

## 8.2 Control Inputs

The system therefore has two main control inputs:

- Pressure applied to the gripper $(P_g)$
- Pressure applied to the rotator/twister $(P_t)$

In our case, both these inputs will be controlled by the fluid inserted through manually operated syringes.

## 8.3 Operating Procedure

The control strategy follows a sequential ladder of operations containing three phases: Grab → Hold → Twist. This ensures stable contact is established with the cap and therefore proper grip is established before rotational motion is applied.

**Step 1 (Setup):**

We place the bottle within the provided guides. Also make sure that both the actuators are unpressurized and “empty”.

**Step 2 (Grasp):**

Fluid is injected into the gripping actuator/ring. Pressure is increased and therefore causes the expansion of the ring and gripping of the bottle cap. Pressure is determined when we eliminate slipping against the bottle cap.

**Step 3 (Hold and Twist):**

Similarly, we then inject fluid into the twisting actuator. The increased pressure causes the embedded nylon threads to produce a twisting motion. This is then translated to the ring and delivers the rotational force needed to twist the bottle cap.

**Step 4 (Deflate and Reset):**

When we have completed the task, we want to deflate the ring first to release the bottle cap by manually pulling back on the syringe. We can then do the same with the twisting actuator. We can then return the device to the baseline or neutral position.

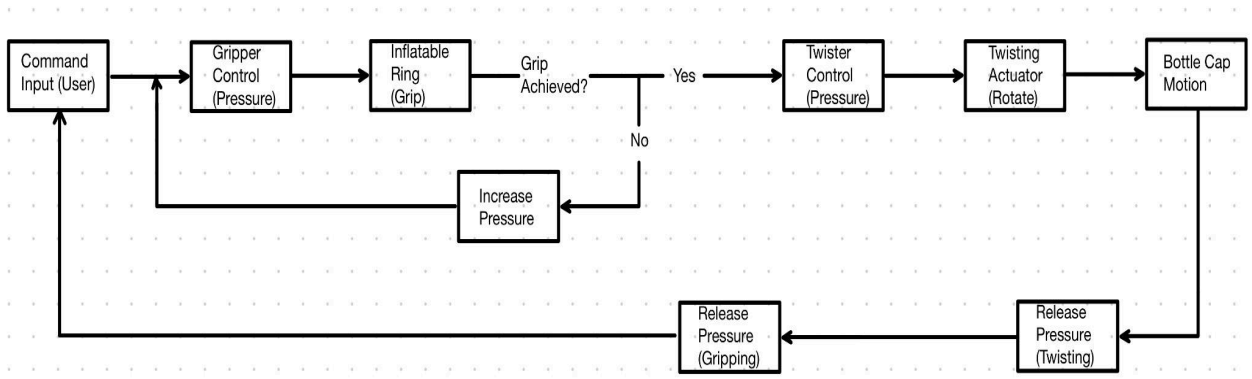


Figure [2] - System Block diagram representation of system operating sequence and cycles

## 8.4 Calibration Strategy

Calibration is required to ensure proper operation and intended results of the device. When looking at the gripper, calibration requires measuring the relationship between pressure and the gripping force. We need to determine the minimum pressure required so that we can achieve contact to the point where we can prevent slip. In terms of the twisting actuator, we need to measure the rotational displacement based on applied pressure. These values will mainly be determined from simulation and then tested with real material when possible.

---

# 9. Testing and Validation Plan

## 9.1 Objectives

The objective of testing is to validate our calculations for grip force, Torque output, angular displacement, and repeatability. Our experimental values would let us compare our theoretical values to actual testing to determine viability of the soft robot.

## 9.2 Testing Methods

- **Grip Force:**

One way we could test the grip force is to use a load sensor with a rigid test object to get the full range of possible force compared to the applied pressure. This will not only tell us whether we are able to reach the theoretically calculated threshold or force needed to properly grip the object but also whether or not we are able to prevent slip.

- **Torque:**

We can test torque in a similar manner by attaching a lever arm and a force gauge to the ring. Based on the formula $\tau = rF$, We can determine the amount of torque produced as it related to the amount of pressure applied. We can then use these values and compare it to the required range of (0.3-0.6 Nm) and verify whether our calculated value that demonstrated more than enough grip was accurate or not.

- **Angular Displacement:**

Testing this requires simple observation. We can simply place visual trackers on the rotating actuator in reference to the rest position and allow the actuator to fully actuate within the defined pressure zone. We can then measure the displacement from the rest position reference point and see whether we can achieve desired rotation or not.

- **Repeatability:**

This is just tested by repeatedly operating the soft robot from beginning to end over multiple cycles. By doing multiple cycles (10-20), we can see whether there are any variables that hinder consistency among trials or whether there is any risk of breakage or damage that might impede performance over longer cycles.

# 9.3 Validation

Validation will be just as simple as comparing calculated values to theoretical values and determining whether we need to adjust variables such as pressure in the ring or gripping material and so on. In our case, we will rely mostly on simulation values to see whether we get expected results based on material properties and inputted theoretical values to see if the simulation runs our model as expected. Having said this, we do need to account for the fact that the simulation assumes everything runs perfectly and there are many assumptions it makes such as the fact that of how much material fatigue is prevalent in the second cycle vs the 200th cycle.

These tests are meant to verify that the system meets performance requirements and align with our theoretical values and the assumptions made based on those values.

---

# 10. Failure Modes and Limitations

We will now look at potential failure modes of this soft robot system and discuss the relevant limitations. There are many points of failure and the following are the most important.

- **Insufficient Grip:**

This is describing the potential slipping that can occur between the ring gripper and the bottle cap. This can be caused by either low contact area between the two surfaces or just the nature of the surfaces themselves. If the surfaces are too smooth or anything like that. If the surfaces do slip against each other, the torque form the twisting actuator inst properly translates to the bottle cap and therefore we could end up with half rotations as an example. A way to mitigate this issue is to either increase the hydraulic pressure, replace one of the surfaces with a higher friction alternative, or change the ring geometry for better contact.

- **Insufficient Twisting Torque**

This just means that there might be  an issue of the actuator not providing enough twisting motion due to either material stiffness or the suboptimal fiber angle. This is dependent on the relationship between the pressure and produced displacement and whether the pressure need is viable for the displacement needed. This can ultimately lead to not enough rotation to actually open the cap; however, we can compensate for this by increasing the provided pressure, adjusting the fiber angle based on calculations, and/or increasing actuator length or thickness.

- **Over Pressurization**

There is a potential issue we could encounter of over-pressurization within the actuators. This is just in the event that we introduce excessive fluid for whatever reason. Obviously, this can cause issues such as material stretching up until potential permanent deformation. This is pretty simple to prevent or mitigate where we can just calculate and define maximum pressure limits based on material properties.

- **Leakage and Sealing Failure**

Leaks caused by poor sealing between connections and joints or just from material defects. The issue comes apparent when we get pressure losses due to leaks during operation which can consequently cause reduced performance such as slip. This can be prevented by using secure fittings and sealants and revolve our design around watertight seals.

- **Material Fatigue**

When repeatedly operated, we can encounter material fatigue within the elastomer. This can also lead to reduced performance but also can extend to full on device failure from material tearing. This is simply solved by knowing the pressure and displacement maximums and selecting the appropriate material based on those complications.

---

# 11. Future Improvements

This current design is very simple and has many areas for improvements some of which has been mentioned previously. The biggest area for improvement comes in the pressure delivery system. Any machine is more precise and accurate when the measurements and general inputs and processes are free from human faults and biases. In our design, the hydraulic pressure is introduced by manual syringes. This introduces a lot of variability that can't be accounted for with any amount of calculations. This can cause many issues, including the issues highlighted above such as slip or material deformation.

After that, a lot of the other improvements just have to mainly do with increasing efficiency and reliability of the device. We can replace the actuator material with something that is more flexible and resistant to tears or find a design change that can distribute the pressure more effectively in the ring. In general we could implement the following changes:

- Automated pressure control
- Surface grip enhancement
- Optimizing fiber angle, spacing, and material
- Adding pressure and stress sensors that feedback to the pressure control machine
- Improved sealing and fluid management

These proposed improvements focus mainly on efficiency and reliability of the system by enhancing control, increasing torque, and grip performance to make the system more consistent in practical applications.

---

# 12. Conclusion

In this report, we presented a design for a soft robot that is made to screw off a standard plastic bottle cap from a bottle. The design consists of two stages actuated independently, a fiber reinforced twisting actuator that produces controlled rotational motion, and the expanding ring that acts a gripper that grabs onto the bottle cap. The proposed design is to explore the principles and mechanics of soft robots.

This design explores these mechanics to meet the functional objective of unscrewing a bottle cap from a bottle. This is done by enabling proper gripping, sufficient torque generation, and controlled angular displacement. This is done by calculations obtained through models and simulations as well as abiding by a control strategy to ensure proper and repeatable function of the device. We can use this and develop a testing plan by analyzing potential sources of failure and creating practical mitigation strategies. We can then use the potential sources of improvements to improve on the design, efficiency, and reliability of the soft robot.

In this project, we demonstrated the ability of soft robots to efficiently grab and twist using sufficient force to manipulate objects. Overall, the project demonstrates the effective ability of soft robots to achieve this objective through analysis of mechanics and material science.

---

# 13. References


- [1] D. Rus and M. T. Tolley, “Design, fabrication and control of soft robots,” *Nature*, vol. 521, no. 7553, 2015.
- [2] B. Gorissen et al., “Elastic inflatable actuators for soft robotic applications,” *Advanced Materials*, vol. 29, no. 43, 2017.
- [3] F. Connolly, C. J. Walsh, and K. Bertoldi, “Automatic design of fiber-reinforced soft actuators for trajectory matching,” *Proceedings of the National Academy of Sciences*, vol. 114, no. 1, 2017.
- [4] R. Deimel and O. Brock, “A compliant hand based on a novel pneumatic actuator,” *IEEE International Conference on Robotics and Automation (ICRA)*, 2013.
- [5] M. T. Tolley et al., “A resilient, untethered soft robot,” *Soft Robotics*, vol. 1, no. 3, 2014.
- [6] Packaging Technologies and Science, “Torque requirements for bottle closures,” *Packaging Technology Journal*, typical range 0.3–0.6 Nm.
- [7] Smooth-On Inc., “Ecoflex™ Series Silicone Rubber Data Sheet,” [Online]. Available: https://www.smooth-on.com
- [8] D. Rus and M. T. Tolley, “Design, fabrication and control of soft robots,” *Nature*, vol. 521, no. 7553, pp. 467–475, 2015.
- [9] F. Ilievski et al., “Soft robotics for chemists,” *Angewandte Chemie*, vol. 123, no. 8, pp. 1930–1935, 2011.
- [10] R. C. Hibbeler, *Engineering Mechanics: Statics*, 14th ed. Pearson, 2016.

# 14. Engineering Drawing Package

## 14.1 Assembly Drawing

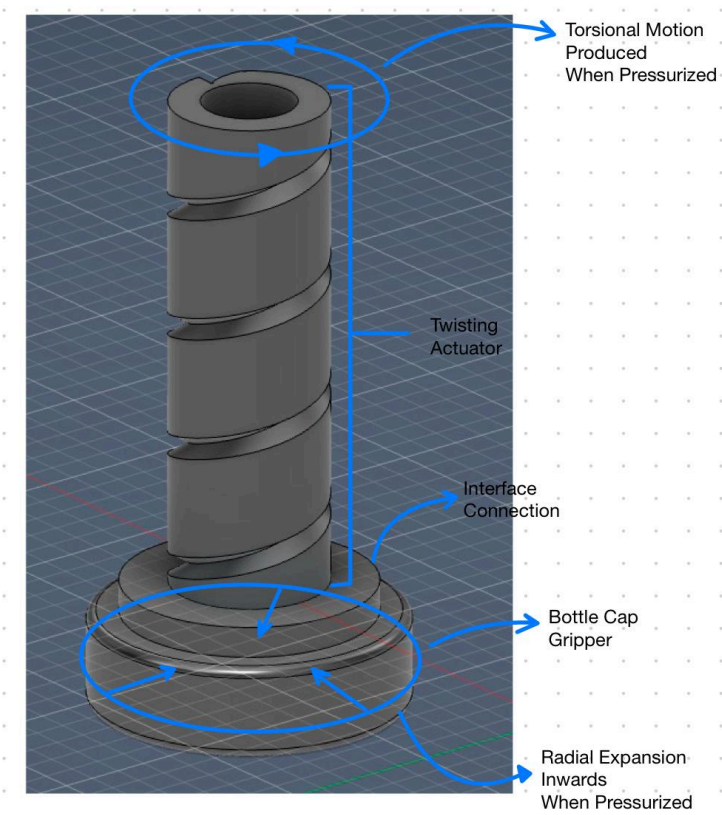


Figure [3] shows the complete assembly of the soft robotic gripping and twisting components. The system consists of a fiber-reinforced twisting actuator, exaggerated by the circular divots within the cylinder, with an inflatable ring gripper positioned around the bottle cap.

The twisting actuator generates torsional motion through pressurization, while the inflatable ring provides uniform radial gripping force around the cap. The bottle cap is positioned within the gripper and the bottle itself is meant to be constrained by the base of the system as shown in the hand drawings in the report.

Figure [3] - Assembled view of Actuating Features

The system is designed to operate sequentially, where the gripper first establishes contact before the twisting actuator applies rotational motion.

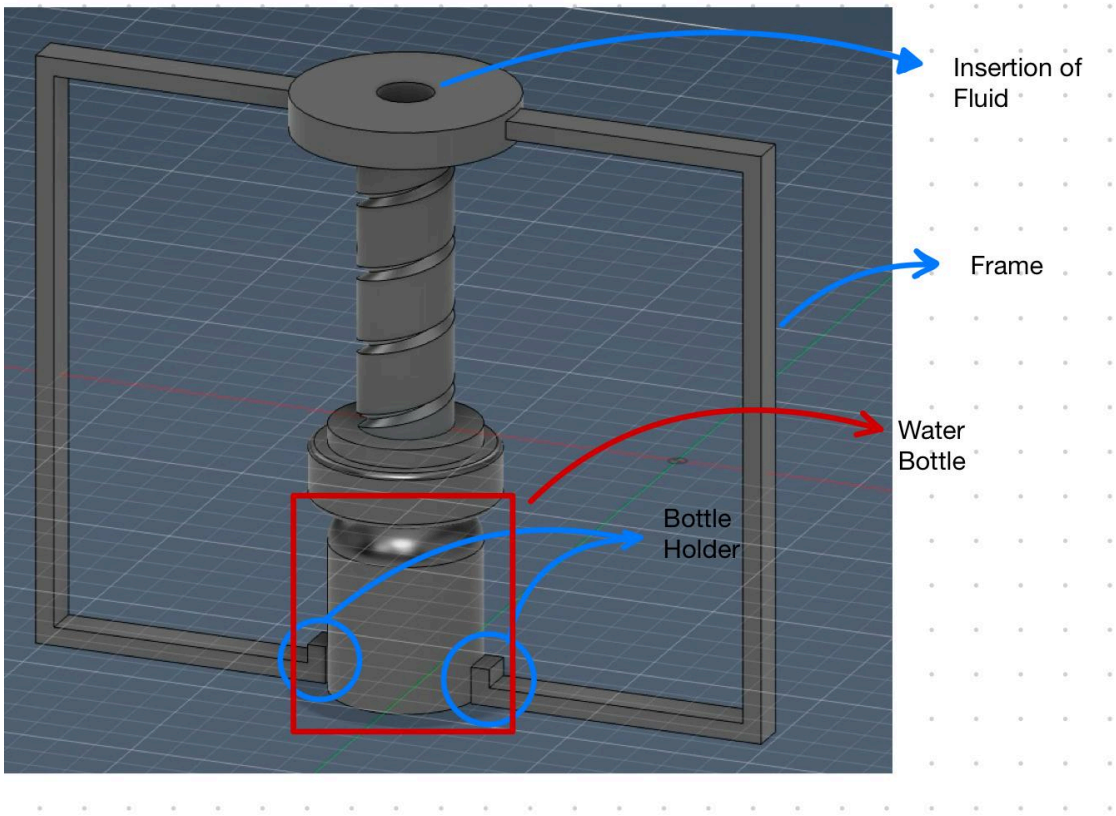


Figure [4] - Assembled view of entire assembly with Bottle and Surrounding Frame

Figure [4] shows the complete assembly with the base support structure. The rigid frame structure surrounds the actuator to provide mechanical support and proper alignment of bottle cap before and during operation. The bottle at the bottom is held in place to ensure the proper alignment with the gripper.

## 14.2 Exploded View and Assembly Instructions

Figure [5] presents an exploded view of the system, illustrating the relative positioning and assembly sequence of all components.

The assembly process is as follows:

1. The twisting actuator is mounted on top of the Interface connector
2. The inflatable ring gripper is attached to the bottom of the interface.
3. The top of the twisting actuator is then attached to the top of the frame as shown in Figure [4]
4. The bottle is placed within the designated bottle holders thereby aligning the bottle cap within the inflatable ring

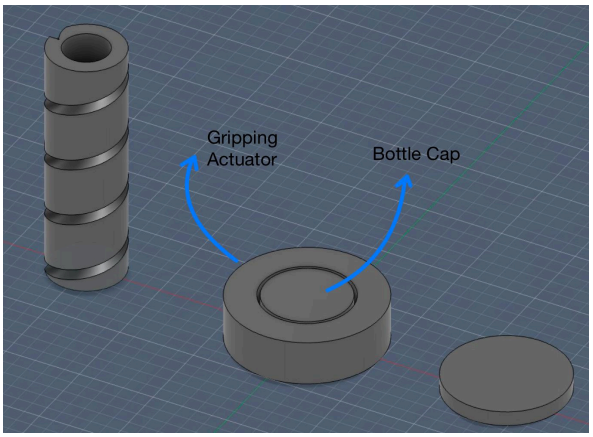


Figure [5] - Exploded view of Actuating Components

This modular configuration allows for independent fabrication and straightforward assembly of each component.

## 14.3 Detailed Part Drawings

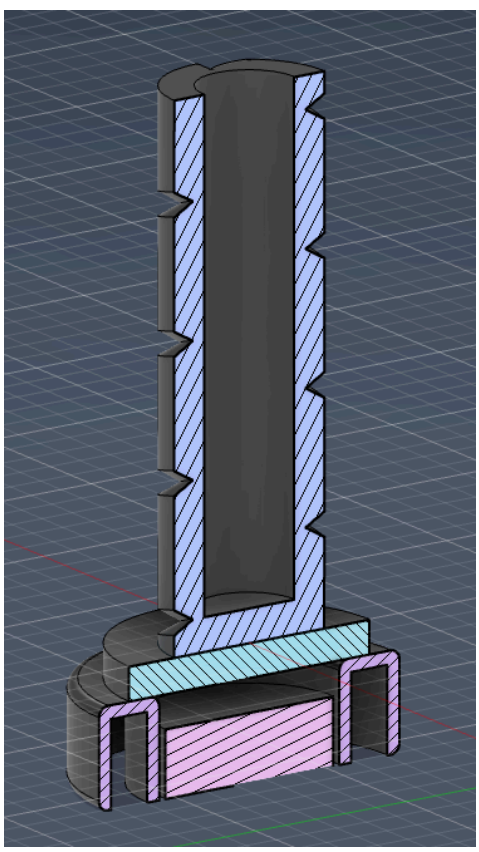

Figure [6] - Cross section of actuating components

The inflatable ring gripper is designed as a hollow cylindrical structure with an internal chamber for hydraulic actuation, as shown in Figure [6] and Figure [7].

The inner diameter of the gripper is 30 mm, allowing it to accommodate a standard bottle cap, while the outer diameter is 50 mm. The internal cavity enables radial deformation when pressurized, producing uniform gripping force around the cap. The hollow area is the fluid chamber and pressurizes and expands the outer walls as fluid fills up.

The twisting actuator consists of a cylindrical soft structure with an internal chamber and helical surface features representing fiber reinforcement

The actuator has an approximate length of 80 mm and an outer diameter of 25 mm. The helical geometry corresponds to fiber reinforcement oriented at an angle of approximately 35° as modeled, which constrains radial expansion and induces torsional deformation under pressure.

This design enables the actuator to generate rotational motion without the use of rigid components.

The gripper is fabricated from a soft silicone elastomer (Ecoflex 00-30), chosen for its high flexibility and large strain capability. The bottle cap is modeled as a rigid cylindrical object with a diameter of 28 mm and a height of approximately 10 mm as modeled, representing a standard plastic bottle cap used for testing.

## 14.4 Material Specifications and Bill of Materials

The materials selected for the system are based on flexibility, manufacturability, and compatibility with hydraulic actuation. The primary components are fabricated from silicone elastomers, while rigid support structures are to be made from standard polymer material such as through 3D printing.

(Note: The following table assumes the use of 3D printed models for all silicone part fabrication)

| Component | Quantity | Material | Function |
|---|---|---|---|
| Inflatable Ring | 1 | Silicone (Ecoflex 00-30) | Gripping |
| Twisting Actuator | 1 | Silicone + Fiber reinforcement | Twisting |
| Bottle Cap | 1 | Plastic | Target Object |
| Frame | 1 | Rigid Polymer/3D print | Structural Support |

## 14.5 Actuation and Routing Diagram

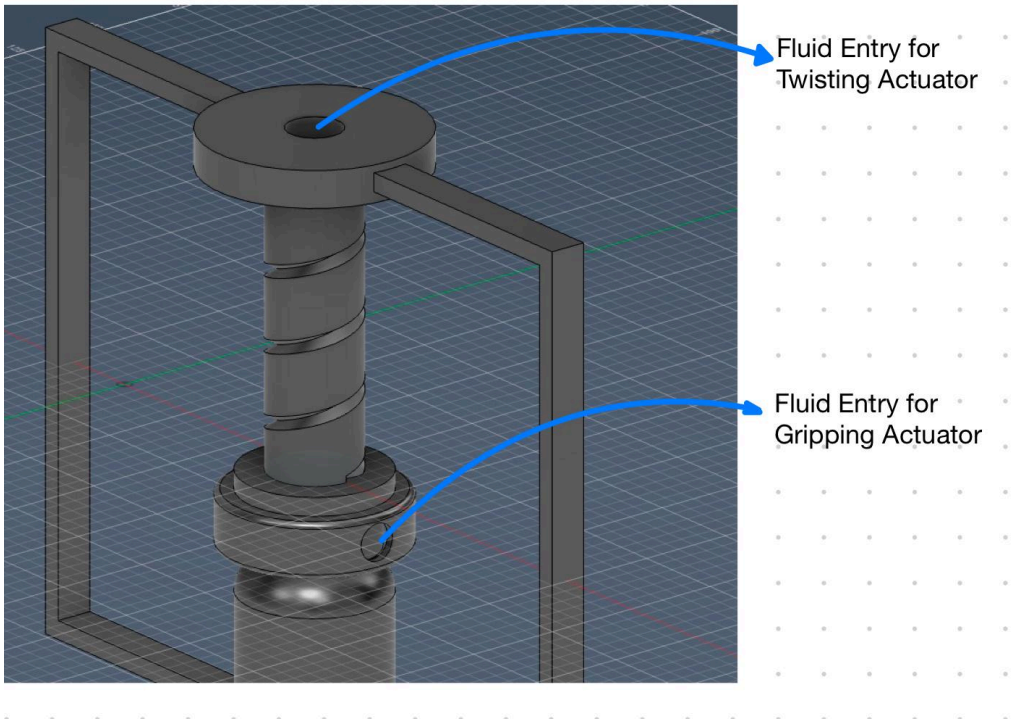


Figure [7] - Fluid Inlets on Model

The system is actuated using independent hydraulic inputs, as shown in Figure [7]. Separate fluid lines are used to control the gripping and twisting functions. These will be manually controlled through syringes which will allow for putting in fluid in but also taking fluid out.

The gripper is actuated by pressure Pg, which induces radial deformation, while the twisting actuator is controlled by pressure Pt, generating torsional motion. This separation allows for sequential control of the system, ensuring that gripping occurs before twisting and allowing us to make sure we have no slip before twisting.

# 15. Simulation and Results

## 15.1 Simulation Results and Discussion

Simulations were conducted to evaluate the performance of both the radial gripper and the twisting actuator under expected operating conditions. The goal of these simulations was to determine whether the system could generate sufficient gripping force and torque to successfully remove a bottle cap.

## 15.2 Radial Gripper Performance

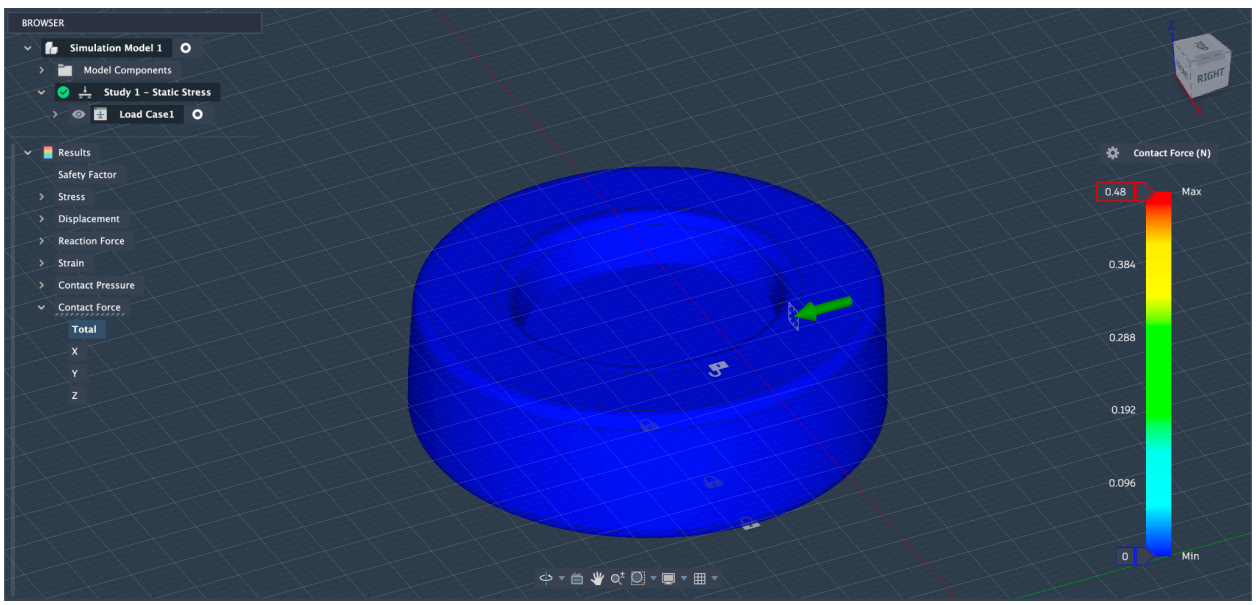

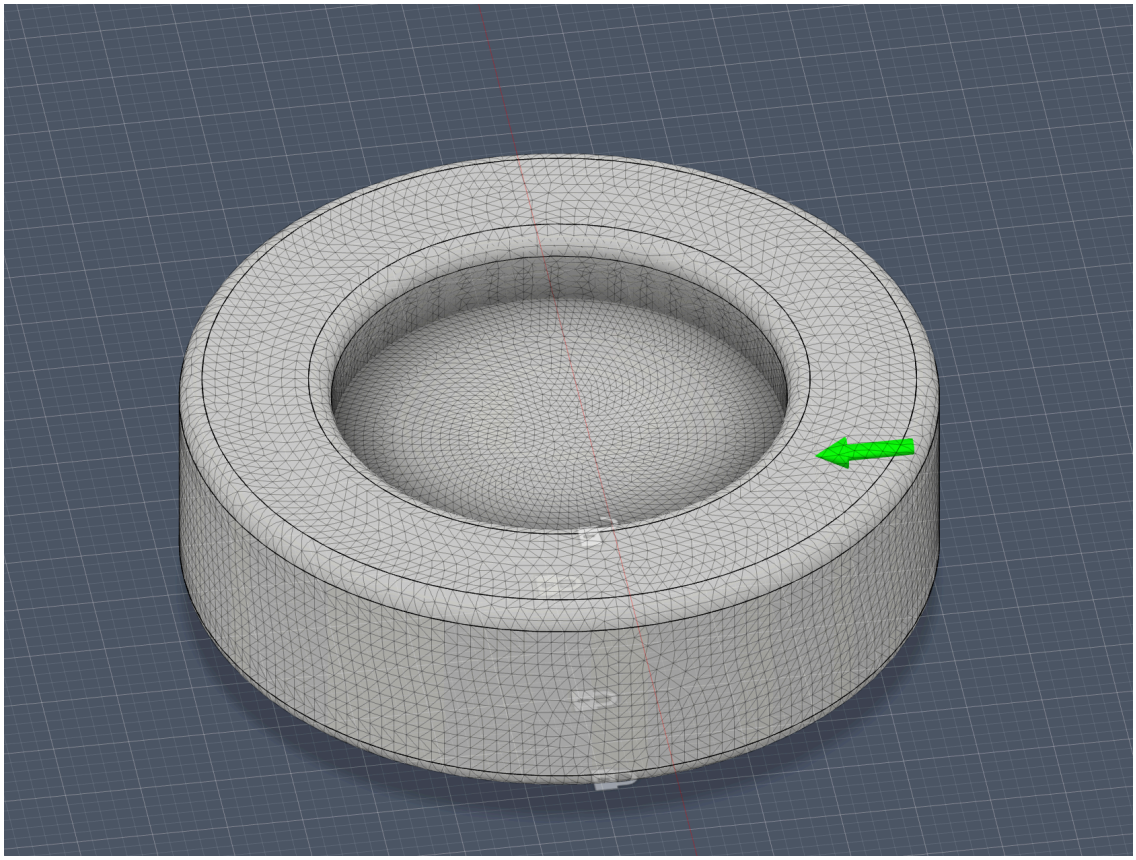

The radial gripper simulation focused on evaluating the contact physics between the gripper and the bottle cap (Bottle cap shown as solid cylinder in center in the diagram above) . Results indicated a maximum contact force on the order of approximately 0.5 N, with corresponding contact pressures remaining relatively low across the interface. This is mainly due to the fact that the gripping area is very small compared to the friction force and torque required to open the cap. Additionally, visual inspection of the deformation results showed minimal effective compression of the gripper against the cap surface.

These values are significantly lower than the force required to securely grip a standard bottle cap. As a result, the gripper is unable to generate sufficient normal force to prevent slipping during actuation. This indicates that the gripping mechanism does not meet the functional requirements of the system and would fail to maintain adequate contact during operation.

## 15.3 Twisting Actuator Performance

The twisting actuator was evaluated by fixing the top surface and applying internal loading conditions to induce rotational deformation. Reaction force results in both the X and Y directions showed peak values of approximately 2.5–2.7 N, indicating the magnitude of tangential forces generated during actuation.

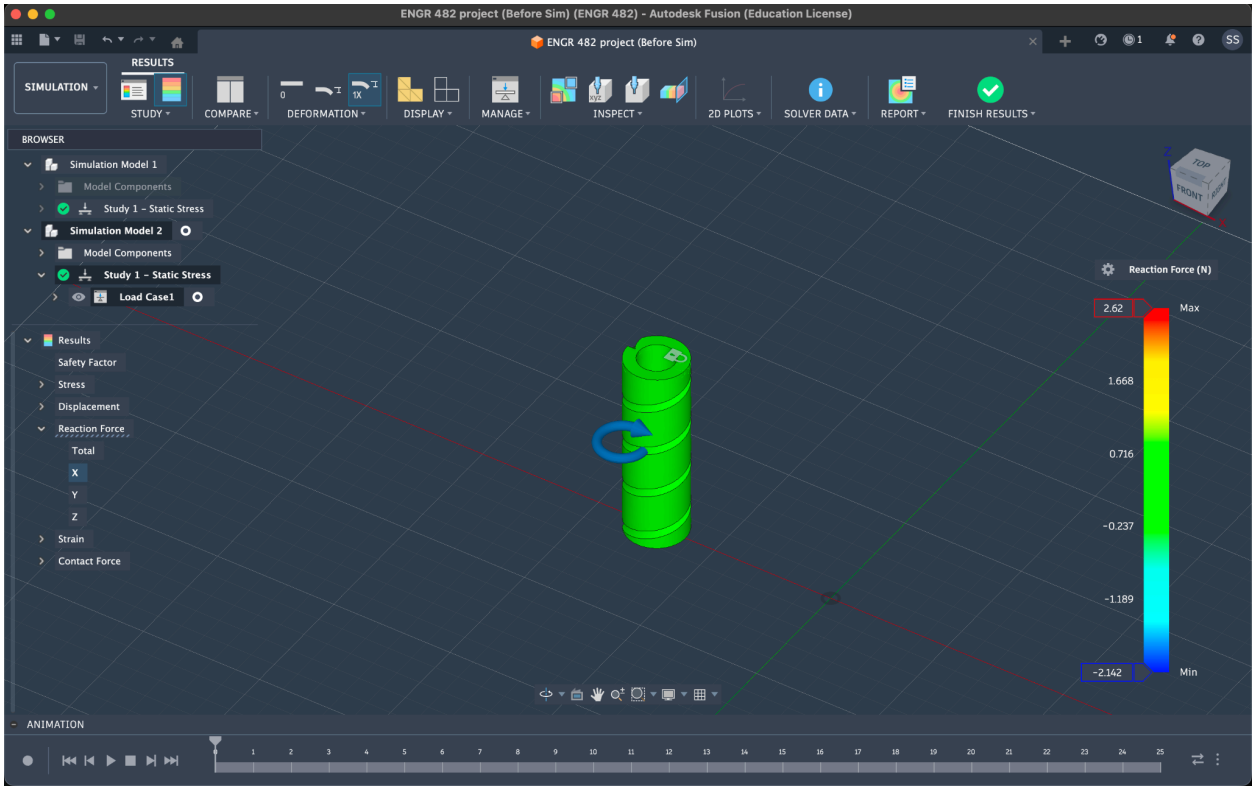


To estimate the torque produced by the actuator, the mean radius of the structure was used. Given an inner radius of 7.5 mm and an outer radius of 12.5 mm, the effective radius is approximately 10 mm (0.01 m). Using this value, the torque was calculated as:

$\tau = F \cdot r = 2.5 \times 0.01 = 0.025$ Nm

This estimated torque is significantly below the required torque range of 0.3–0.6 Nm needed to open a standard bottle cap. If we wanted to reach the required torque, we would have to increase the radius of the actuator to approximately 10 times or find a material that could withstand a higher pressure without failing but also still maintain flexibility and resist deformation over multiple cycles.  Furthermore, deformation animations of the simulation showed that the actuator rotates well below 90°, which is substantially less than the required 180°–360° rotation necessary for cap removal.

(INSERT ROTATIONAL ACTUATOR VIDEO)

The limited angular displacement confirms that the actuator is unable to surpass the torque of the bottle cap. Even if structural integrity is maintained, the actuator fails to meet the functional requirements due to insufficient torque generation and rotational capability of the material and design itself.

*(Note: Our design included the use of coiled threads within the rotational actuator as mentioned in the report above; however, we weren't able to simulate that specifically in the software due to limitations of the software itself and modeled using the coiled cut as seen in the figure above. Having said that, taking into account the current ability of its rotation and that it barely rotates, we believe that including the threads in our consideration still wouldn't have achieved our goal of 180 - 360 degrees of rotation.)*

## 15.4 Overall System Assessment

Combining the results from both simulations, it is obvious that the system does not meet the necessary performance criteria. The radial gripper fails to provide sufficient gripping force, while the twisting actuator produces inadequate torque and rotational displacement.

Insufficient gripping force would lead to slipping, while insufficient torque and rotation would prevent the cap from being unscrewed even if proper grip was achieved. Therefore, the current design is not ideal for performing the task of opening a bottle cap.

Overall, the simulation results provide strong evidence that the proposed design does not satisfy the required performance metrics and would require a different design approach to be able to complete the task.