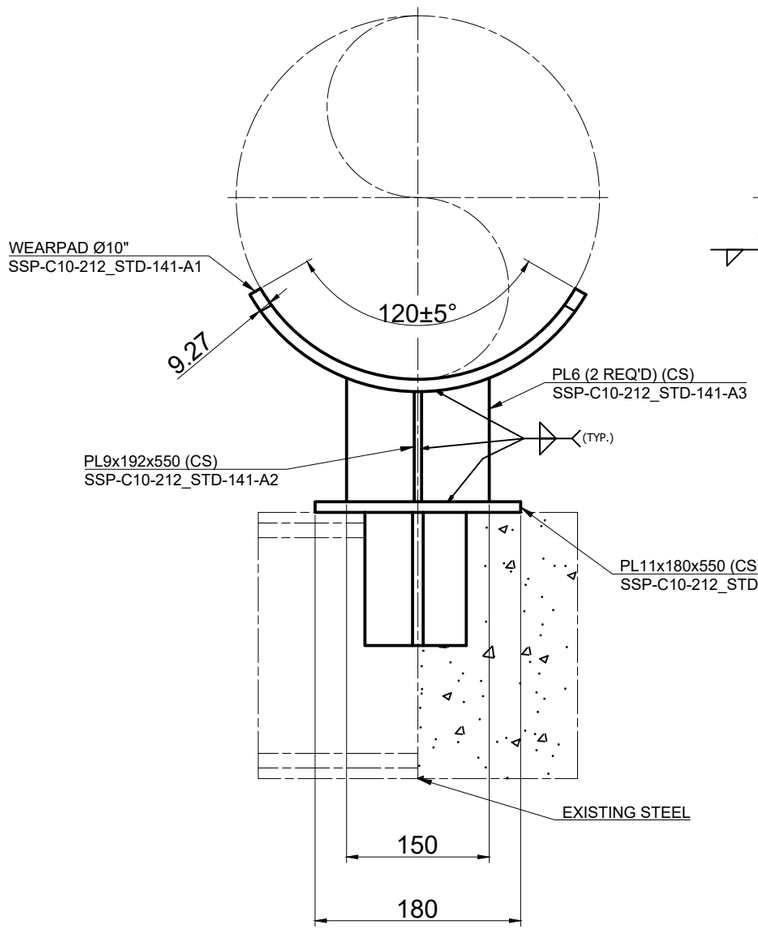

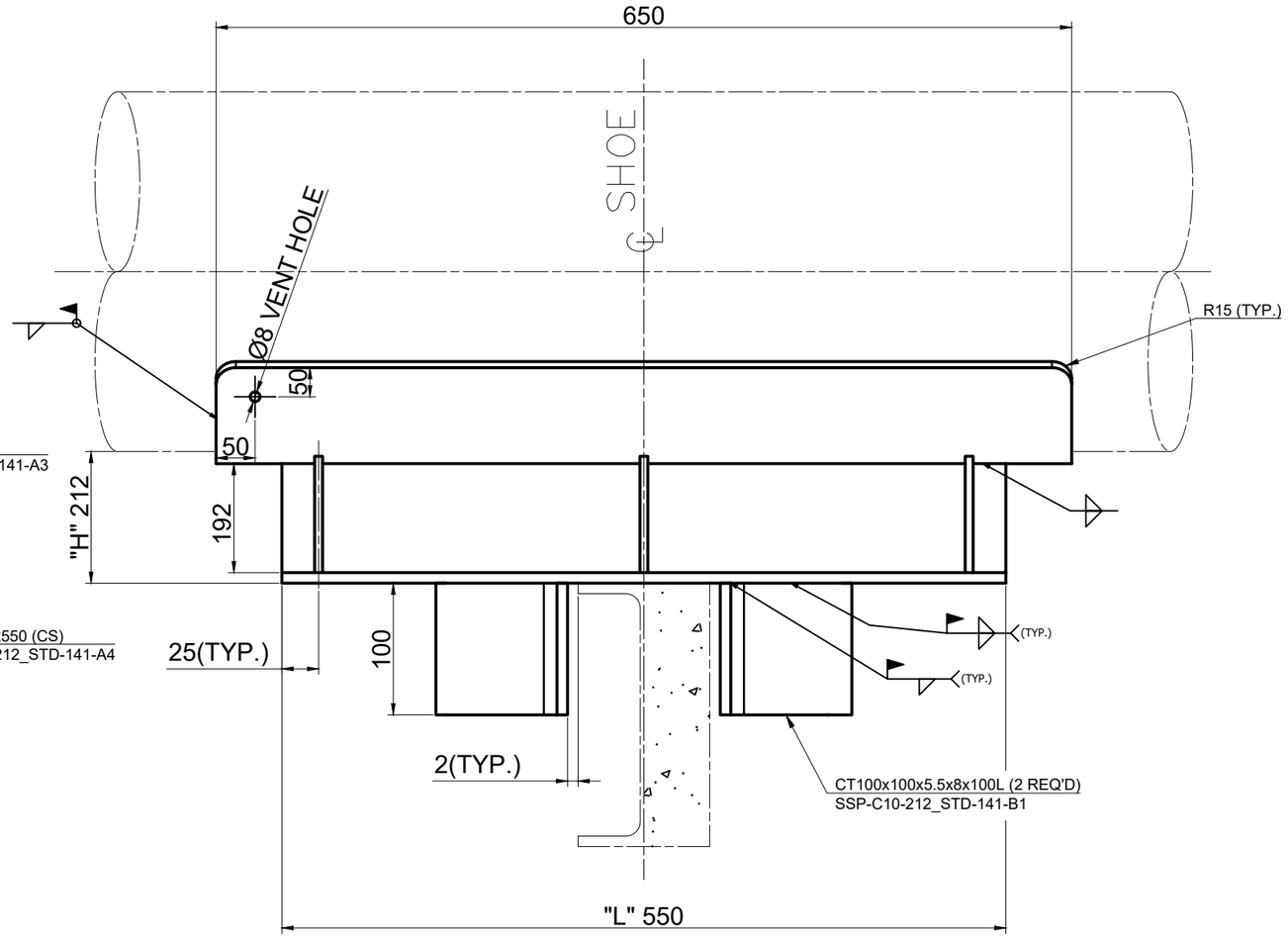

SSP-C10-212_STD-141
WELDED SHOES & STOPS

NOTES

1. IF THE HEIGHT OR LENGTH OF SHOE IS NOT SPECIFIED IN SUPPORT NUMBERING, THE VALUE IS STD.
2. WEAR PAD SHALL BE WELDED IN THE SHOP FOR SUPPORT TYPE "SHP" AND "SHPE"
3.

HEIGHT	MEMBER
150 ~ 180	H200x200x8x12
181 ~ 200	BUILT-UP H BEAM BY 16t CS PLATE WEB HEIGHT = 200mm

4. IN CASE OF INSTALLATION WITH SPRING SUPPORT OR GUB SUPPORT (ITEM A/B/C), CS PLATE SHALL BE INSTALLED AS BELOW:

SUPPORT NUMBERING SYSTEM

SA** – * * * – *

- HEIGHT "H" CODE or SPECIFIED HEIGHT "H" (OPTION)
- LENGTH "L" CODE (OPTION)
- LINE SIZE(NPS,inch)
- MATERIAL CODE
- SUPPORT TYPE (SA,SAP,SAPE)

REFERENCE

NO	DWG NO	DESCRIPTION

HEIN GLOBAL UTAMA

HEIN GLOBAL UTAMA

PT. KOKOH SEMESTA
ENGINEERING-MANUFACTURING-CONSTRUCTION

ISSUE	DESCRIPTION	DATE	DRN	CHKD	APVD	
00	I F A	27/07/2023	FAUZAN	SALEH	ADI. Y	Mr. Jeon

REVISION

DOC TITLE :
SSP-C10-212_STD-141
WELDED SHOES & STOPS

UNIT NO	PROJ. NO	SCALE	SHEET
-	-	NTS	1
KS-HEIN-N3812			REV 00

LOTTE CHEMICAL

SSP-C10-212	**N3812**	**WELDED SHOES & STOPS**													**1**	**35.48**
SSP-C10-212	N3812	WELDED SHOES & STOPS														
SSP-C10-212	N3812	WELDED SHOES & STOPS	WEAR PAD	CS	9.27	x	10	"		SCH	STD	x	650	L	1	13.07
SSP-C10-212	N3812	WELDED SHOES & STOPS	PLATE	CS	9	x	192					x	550	L	1	7.46
SSP-C10-212	N3812	WELDED SHOES & STOPS	PLATE	CS	6	x	71					x	213	L	6	4.27
SSP-C10-212	N3812	WELDED SHOES & STOPS	PLATE	CS	11	x	180					x	550	L	1	8.55
SSP-C10-212	N3812	WELDED SHOES & STOPS	CUT TEES	CS	100	x	100	x	5.5	x	8	x	100	L	2	2.13