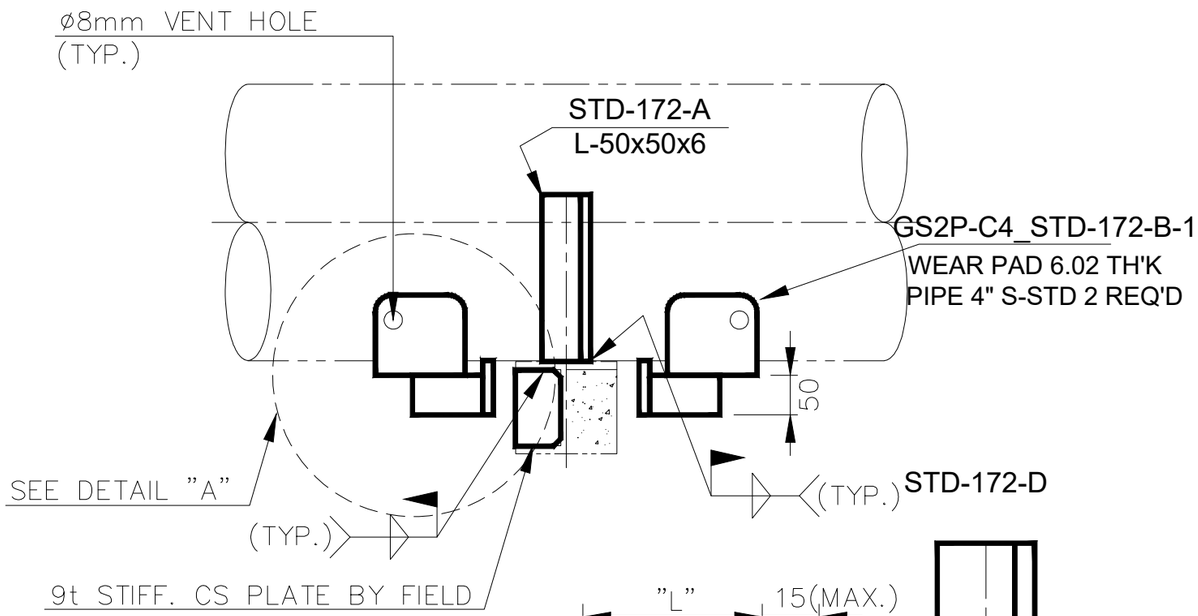

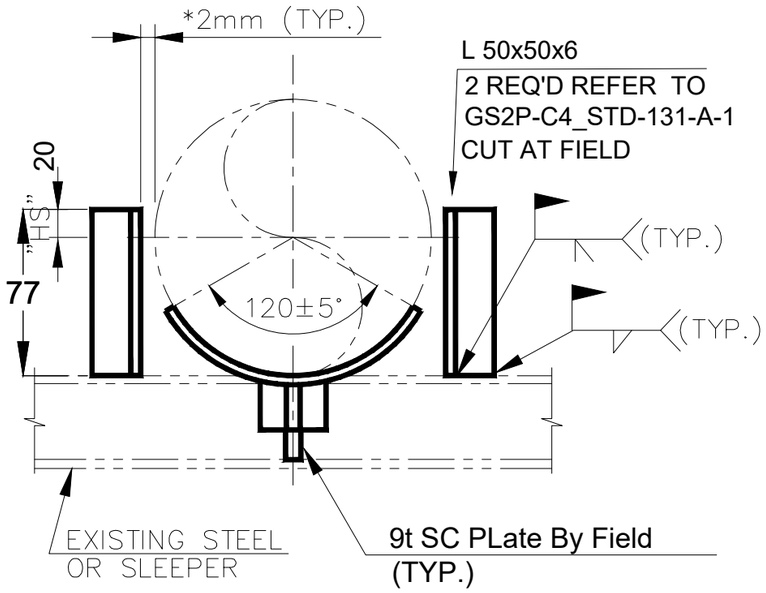

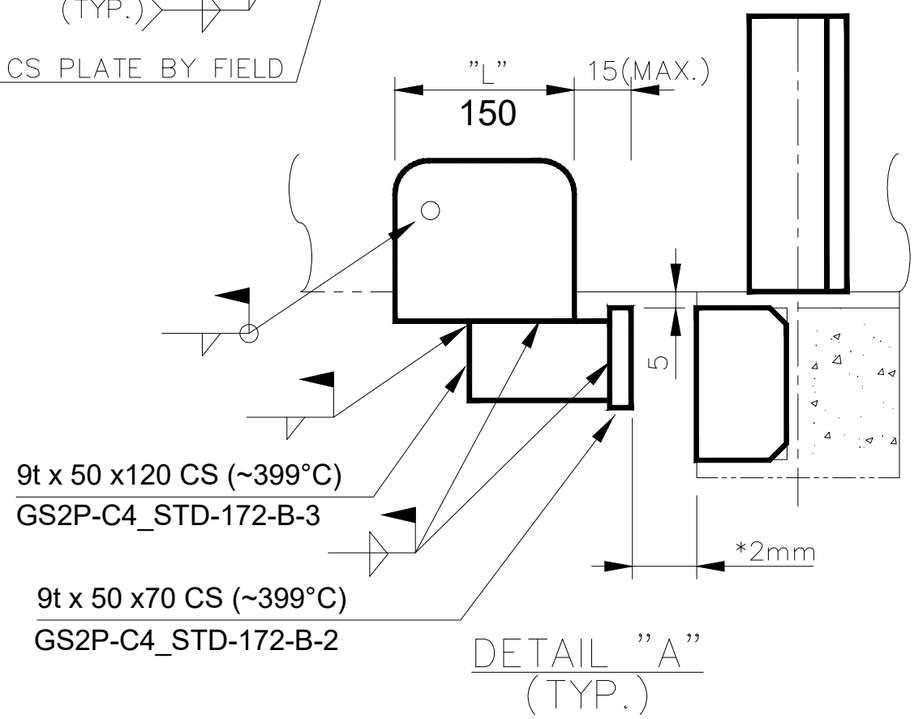

STD-172_GS2P-C4
ANCHORS FOR UNINSULATED LINES (ST2P)

NOTES

1. * WHERE A GAP OTHER THAN 2mm NOMINAL EACH SIDE IS REQUIRED, THIS IS CRITICAL AND SHALL BE SHOWN ON GAD AS GAP = x mm. E.G) "GAP(E–W)=5mm" / "GAP(N–S)=10mm"

2. IF REQUIRED, THE SHIM PLATE SHALL BE PROVIDED BY FIELD AND THE SIZE OF THAT SHOULD BE LESS THAN PIPE O.D. & WIDTH O-BEAM FLANGE. PIPE O.D. SHALL BE INCLUDED THE THICKNESS OF WEAR PAD.

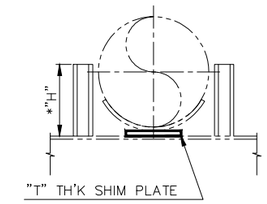

* : H = O.D./2 + "HS" + "T"

SUPPORT NUMBERING SYSTEM

GS2P – * *
- LINE SIZE(NPS,inch)
- MATERIAL CODE
- SUPPORT TYPE

BILL OF MATERIAL

HEC STD NO.	ITEM CODE	MATERIAL	DIM1	DIM2	DIM3	DIM4	DIM5	DIM6	DIM7	DIM8	DIM9	DIM10	QTY	WEIGHT	REMARKS
GS2P-C3_STD-172-A-1	ANGLE	CS	6	x	50	x	50			x	77.0	L	2	0.7	CS(~399°C)
GS2P-C3_STD-172-B-1	WEAR PAD	CS	6.02	x	4	"		SCH	STD	x	150	L	2	1.6	CS(~399°C)
GS2P-C3_STD-172-B-1	PLATE	CS	9	x	50.0					x	70	L	2	0.5	CS(~399°C)
GS2P-C3_STD-172-B-1	PLATE	CS	9	x	50.0					x	120	L	2	0.8	CS(~399°C)
TOTAL													8	3.6	

REFERENCE

NO	DWG NO	DESCRIPTION

HEIN GLOBAL UTAMA

HEIN GLOBAL UTAMA

PT. KOKOH SEMESTA
ENGINEERING-MANUFACTURING-CONSTRUCTION

ISSUE	DESCRIPTION	DATE	DRN	CHKD	APVD
00	ISSUED FOR INFOR	22/02/2023	FIVTY	SALEH	

REVISION

DOC TITLE :
STD-172_GS2P-C4
ANCHORS FOR UNINSULATED LINES (ST2P)

LOTTE CHEMICAL

UNIT NO	PROJ. NO	SCALE	SHEET
-	-	NTS	1

KS-HEIN-N0054

REV 00