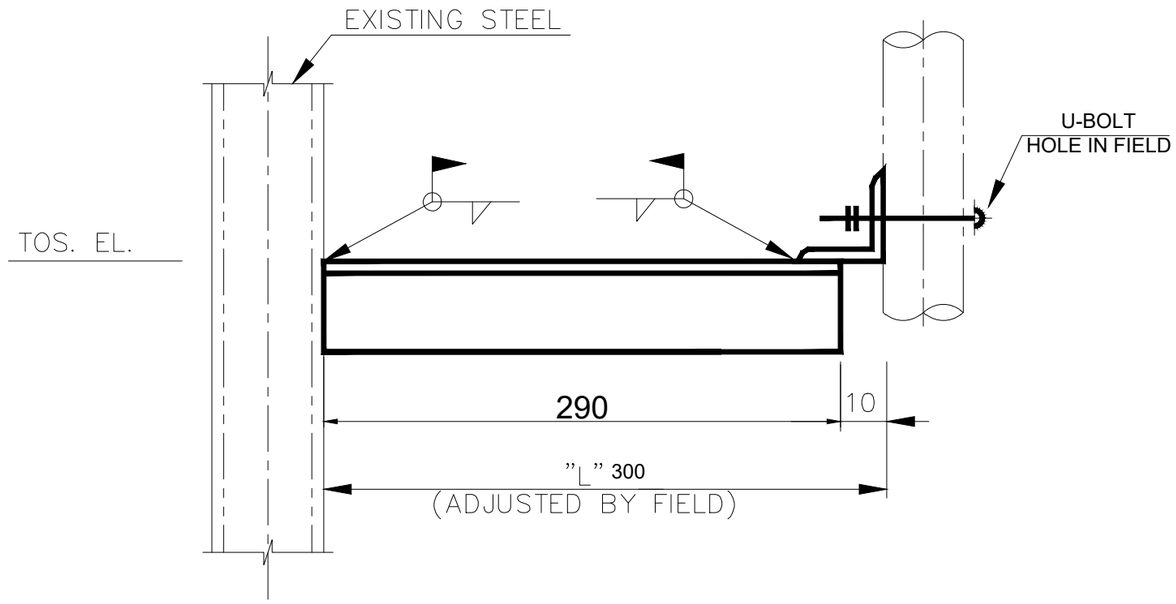

BA3-AAA_STD-223
UTILITY LINE SUPPORT

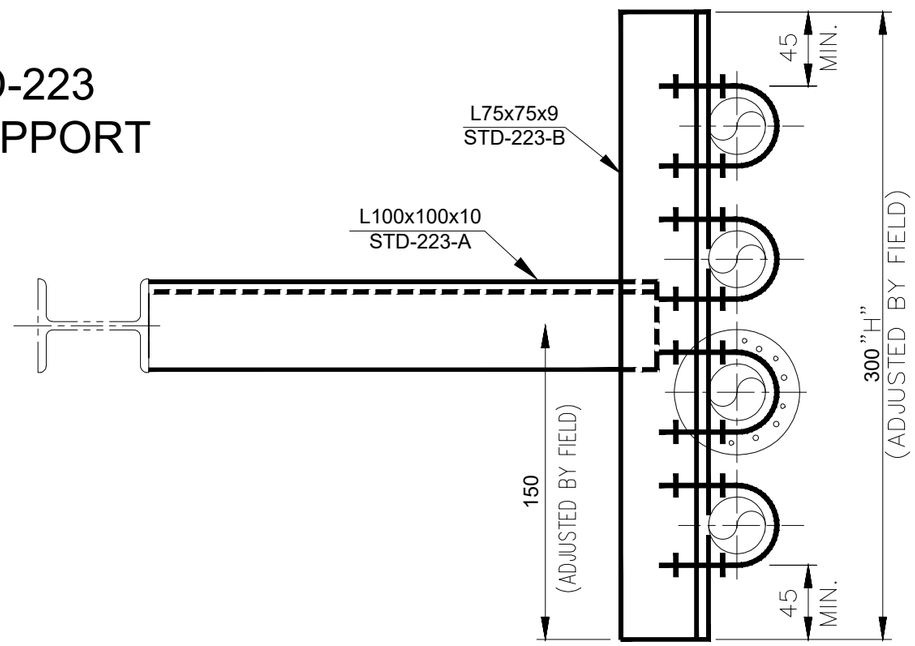

NOTES

REFERENCE

NO	DWG NO	DESCRIPTION

HEIN GLOBAL UTAMA

HEIN GLOBAL UTAMA

PT. KOKOH SEMESTA
ENGINEERING-MANUFACTURING-CONSTRUCTION

ISSUE	DESCRIPTION	DATE	DRN	CHKD	APVD	
00	I F A	13-07-2023	FIVTY	SALEH	ADI. Y	Mr. Jeon

REVISION

BA3-AAA_STD-223
UTILITY LINE SUPPORT

BA3-AAA	**STD-223**	**N2411**	**UTILITY LINE SUPPORT**														**1**	**89.99**
BA3-AAA	STD-223-A	N2411	UTILITY LINE SUPPORT		ANGLE	CS	100	x	100	x	10			x	290	L	1	4.38
BA3-AAA	STD-223-B	N2411	UTILITY LINE SUPPORT		ANGLE	CS	75	x	75	x	9			x	300	L	1	2.99

LOTTE CHEMICAL

UNIT NO	PROJ. NO	SCALE	SHEET
-	-	NTS	1
KS-HEIN-N2411			REV 00