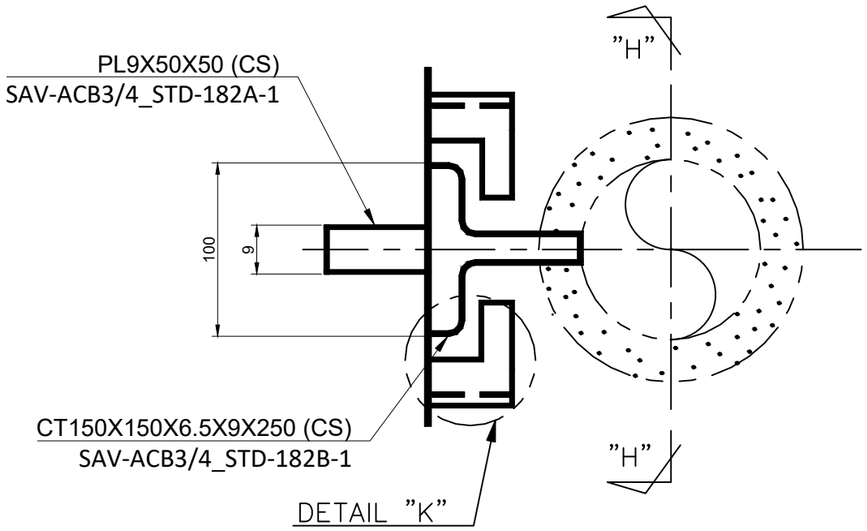

REST AND GUIDE PLAN

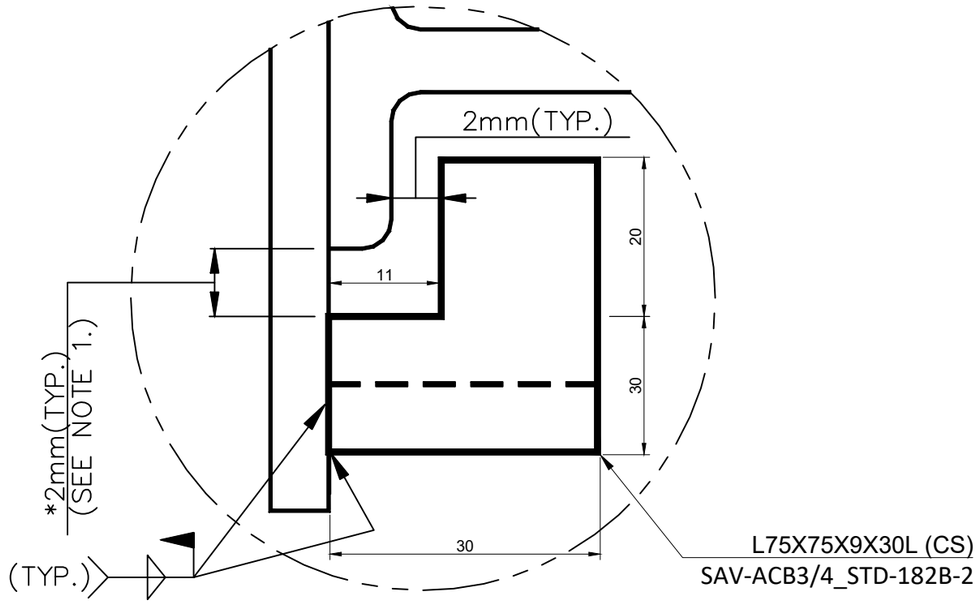

DETAIL "K"

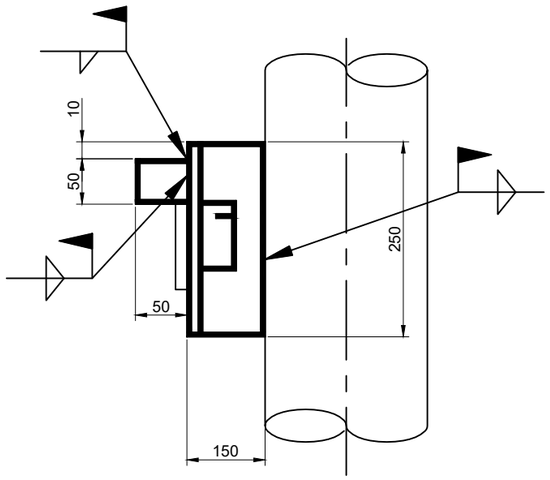

ELEVATION VIEW

SAV-ACB3/4_STD-182 SHOE & ANCHOR FOR INSULATED VERTICAL LINE < UP TO DN250(10") >

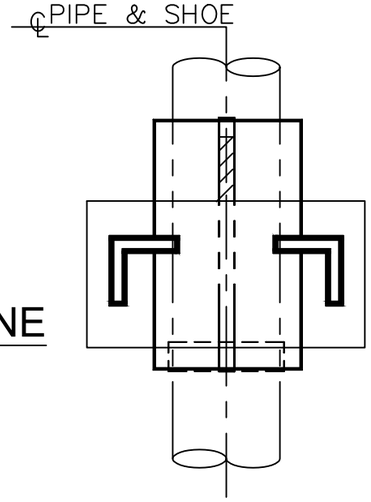

SECTION VIEW "H"–"H"

NOTES

1. * WHERE A GAP OTHER THAN 2mm NOMINAL EACH SIDE IS REQUIRED, THIS IS CRITICAL AND SHALL BE SHOWN ON GAD AS GAP = x mm. E.G) "GAP(E–W)=5mm" / "GAP(N–S)=10mm"
2. THE ISOLATOR SHALL BE BONDED ONLY ON THE INSIDE OF CLAMPS.
3. SHEAR LUGS IS REQUIRED IF LINE MATERIAL IS METAL EXCEPT GALV./ LINED/ COATED CS AND ITS SIZE IS DN100(4") OR ABOVE. DETAIL SHOULD BE REFERED TO BELOW.

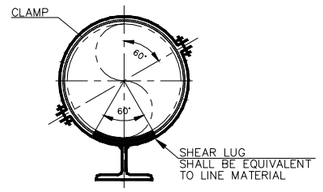

REFERENCE

NO	DWG NO	DESCRIPTION

HEIN GLOBAL UTAMA

HEIN GLOBAL UTAMA

PT. KOKOH SEMESTA
ENGINEERING-MANUFACTURING-CONSTRUCTION

ISSUE	DESCRIPTION	DATE	DRN	CHKD	APVD	
00	I F A	23/11/2023	SAEPUL	SALEH	ADI. Y	Mr. Jeon

REVISION

SAV-ACB3/4_STD-182
SHOE & ANCHOR FOR INSULATED
VERTICAL LINE < UP TO DN250(10") >

SAV-ACB3/4	**STD-182**	**N7657**	**SHOE & ANCHOR FOR INSULATED VERTICAL LINE < UP TO DN250(10") >**																**1**	**5.36**	**0.17**
SAV-ACB3/4	STD-182	N7657	SHOE & ANCHOR FOR INSULATED VERTICAL LINE < UP TO DN250(10") >																		
SAV-ACB3/4	STD-182A-1	N7657	SHOE & ANCHOR FOR INSULATED VERTICAL LINE < UP TO DN250(10") >	PLATE	CS				9	x	50	x		x		x	50	L	1	0.18	0.01
SAV-ACB3/4	STD-182B-1	N7657	SHOE & ANCHOR FOR INSULATED VERTICAL LINE < UP TO DN250(10") >	CUT TEES	CS				150	x	150	x	6.5	x	9	x	250	L	1	4.59	0.15
SAV-ACB3/4	STD-182B-2	N7657	SHOE & ANCHOR FOR INSULATED VERTICAL LINE < UP TO DN250(10") >	ANGLE	CS				75	x	75	x	9	x		x	30	L	2	0.60	0.02

LOTTE CHEMICAL

UNIT NO	PROJ. NO	SCALE	SHEET
-	-	NTS	1
KS-HEIN-N7657			REV 00