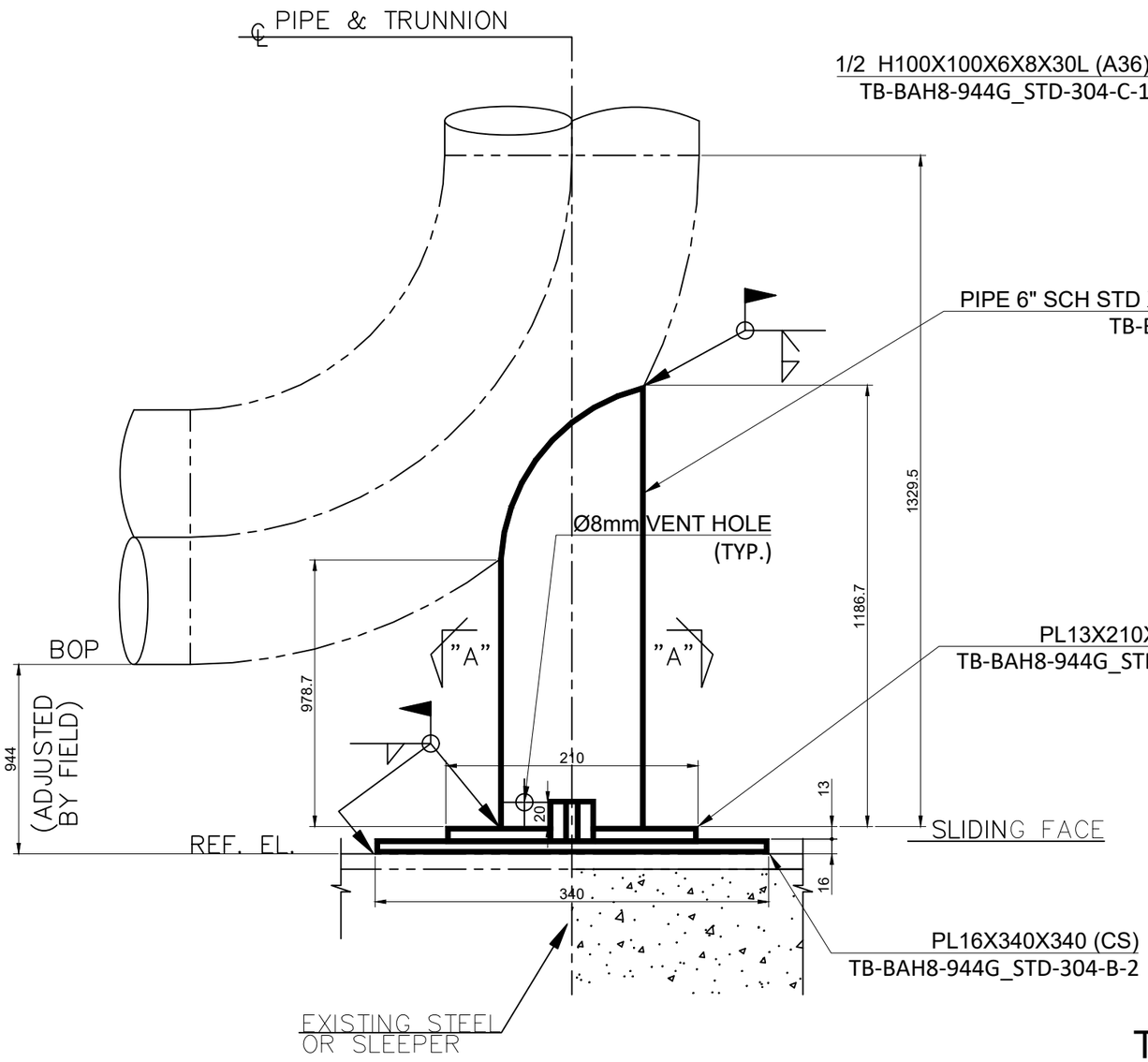

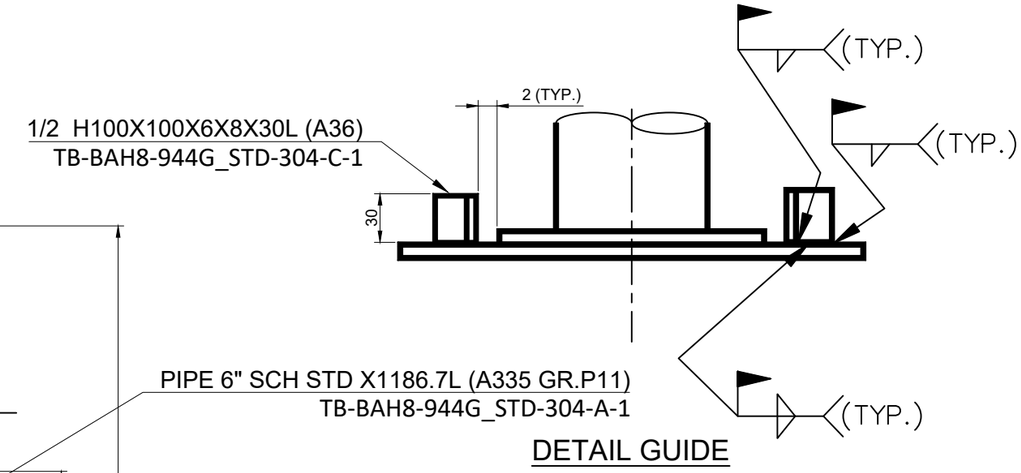

DETAIL GUIDE

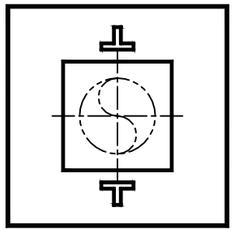

VIEW "A–A"

TB-BAH8-944G_STD-304
TRUNNION SUPPORT WITH BED PLATE

NOTES

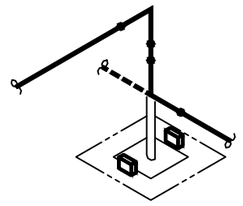

DIRECTION CODE "G"
LINE GUIDES

REFERENCE

NO	DWG NO	DESCRIPTION

HEIN GLOBAL UTAMA

HEIN GLOBAL UTAMA

PT. KOKOH SEMESTA
ENGINEERING-MANUFACTURING-CONSTRUCTION

ISSUE	DESCRIPTION	DATE	DRN	CHKD	APVD	
00	I F A	18/09/2023	SAEPUL	SALEH	ADI. Y	Mr. Jeon

REVISION

TB-BAH8-944G_STD-304
TRUNNION SUPPORT WITH
BED PLATE

UNIT NO	PROJ. NO	SCALE	SHEET
-	-	NTS	1

LOTTE CHEMICAL

KS-HEIN-N6117

REV 00

TB-BAH8-944G	**STD-304**	**N6117**	**TRUNNION SUPPORT WITH BED PLATE**																**1**	**53.43**	**0.79**
TB-BAH8-944G	STD-304-A	N6117	TRUNNION SUPPORT WITH BED PLATE																		
TB-BAH8-944G	STD-304-A-1	N6117	TRUNNION SUPPORT WITH BED PLATE	PIPE	A335 GR.P11				7.11	x	6	"	SCH	STD	x	1186.67	L	1	33.54	0.63
TB-BAH8-944G	STD-304-B-1	N6117	TRUNNION SUPPORT WITH BED PLATE	PLATE	CS				13	x	210				x	210	L	1	4.59	0.04
TB-BAH8-944G	STD-304-B-2	N6117	TRUNNION SUPPORT WITH BED PLATE	PLATE	CS				16	x	340				x	340	L	1	14.80	0.12
TB-BAH8-944G	STD-304-C-1	N6117	TRUNNION SUPPORT WITH BED PLATE	H BEAM	A36			1/2	100	x	100	x	6	x 8	x	30	L	2	0.51	0.01