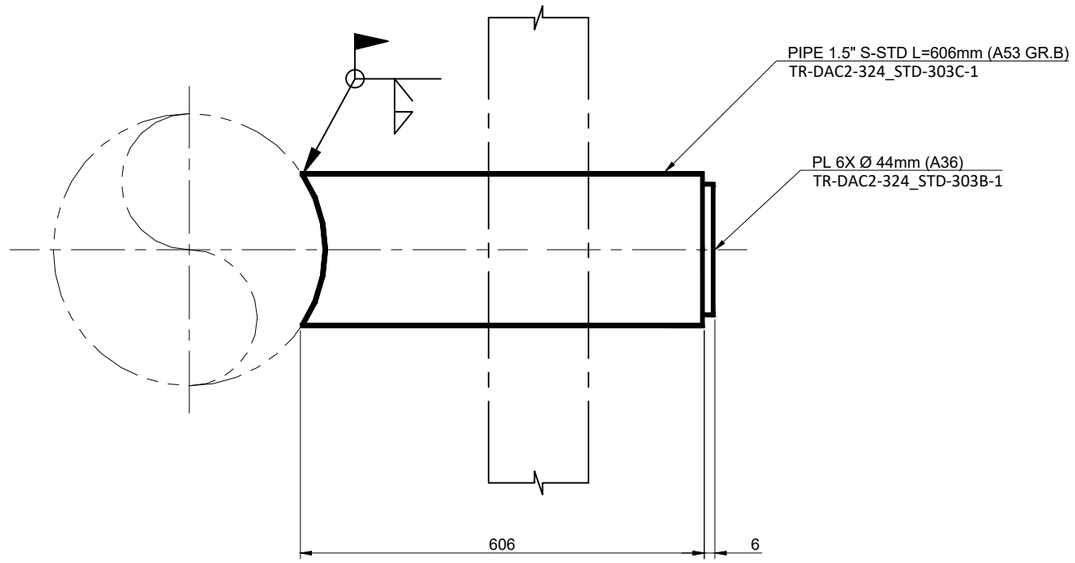

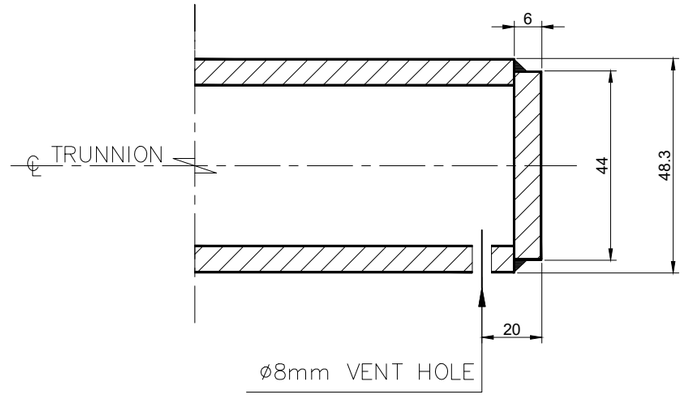

DETAIL FOR END PLATE
ELEVATION

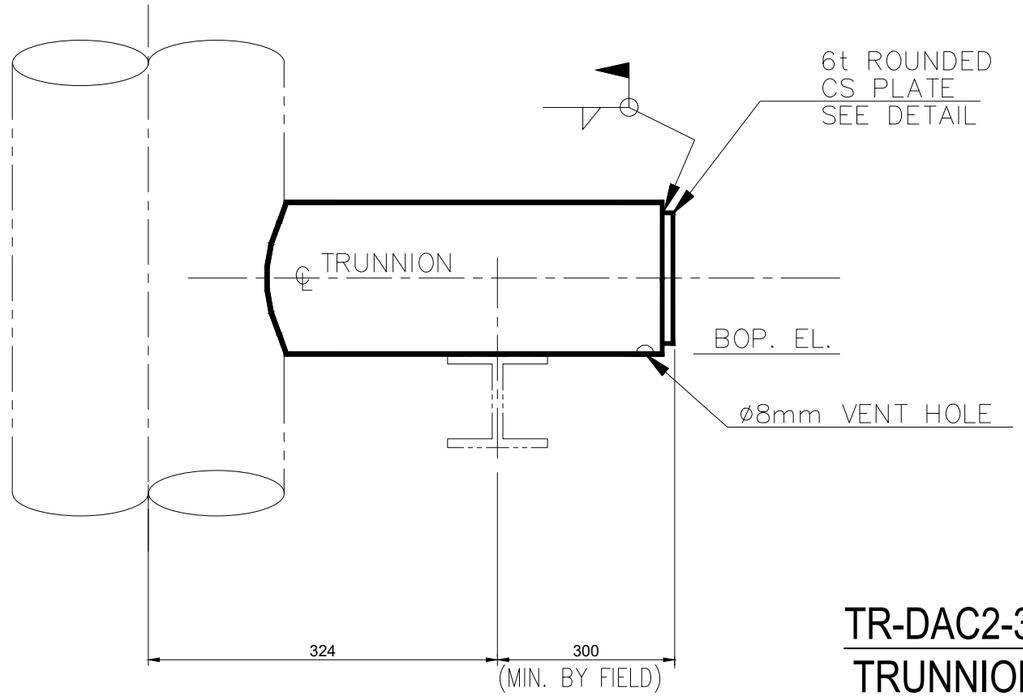

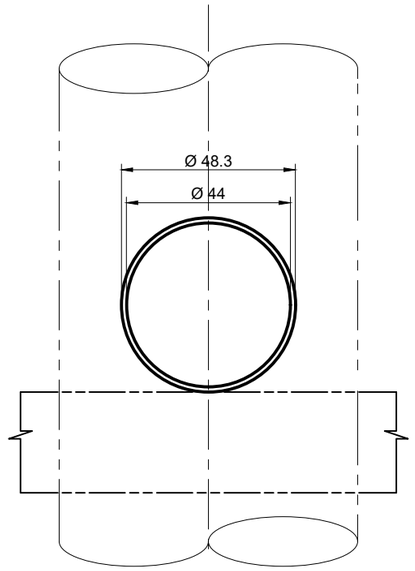

TR-DAC2-324_STD-303
TRUNNION SUPPORT

NOTES

REFERENCE

NO	DWG NO	DESCRIPTION

HEIN GLOBAL UTAMA

HEIN GLOBAL UTAMA

PT. KOKOH SEMESTA
ENGINEERING-MANUFACTURING-CONSTRUCTION

ISSUE	DESCRIPTION	DATE	DRN	CHKD	APVD	
00	I F A	12/07/2023	SAEPUL	SALEH	ADI. Y	Mr. Jeon

REVISION

TR-DAC2-324_STD-303
TRUNNION SUPPORT

UNIT NO	PROJ. NO	SCALE	SHEET
-	-	NTS	1
KS-HEIN-N3400			REV 00

LOTTE CHEMICAL

TR-DAC2-324	**STD-303**	**N3400**	**TRUNNION SUPPORT**																**1**	**4,0543**	**0,2**
TR-DAC2-324	STD-303A	N3400	TRUNNION SUPPORT																		
TR-DAC2-324	STD-303B-1	N3400	TRUNNION SUPPORT	PLATE	A36				6	x	44	x						L	1	1,6	0,10
TR-DAC2-324	STD-303C-1	N3400	TRUNNION SUPPORT	PIPE	A53 GR.B				1,5	x	SCH STD						606,0	L	1	2,4543	0,10