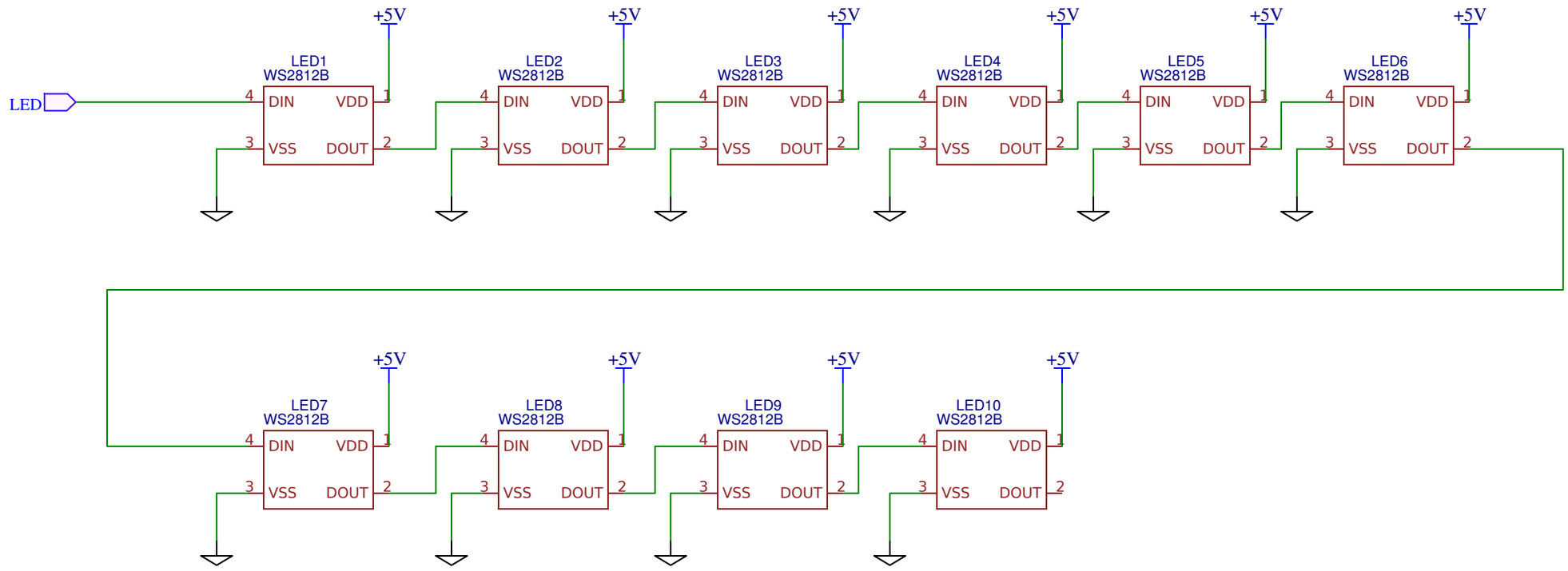

TITLE: AQI Monitor	REV: 1.0
Date: 2017 03 01	Sheet: 1/3
EasyEDA V3.12.1	Drawn By: I3D inno

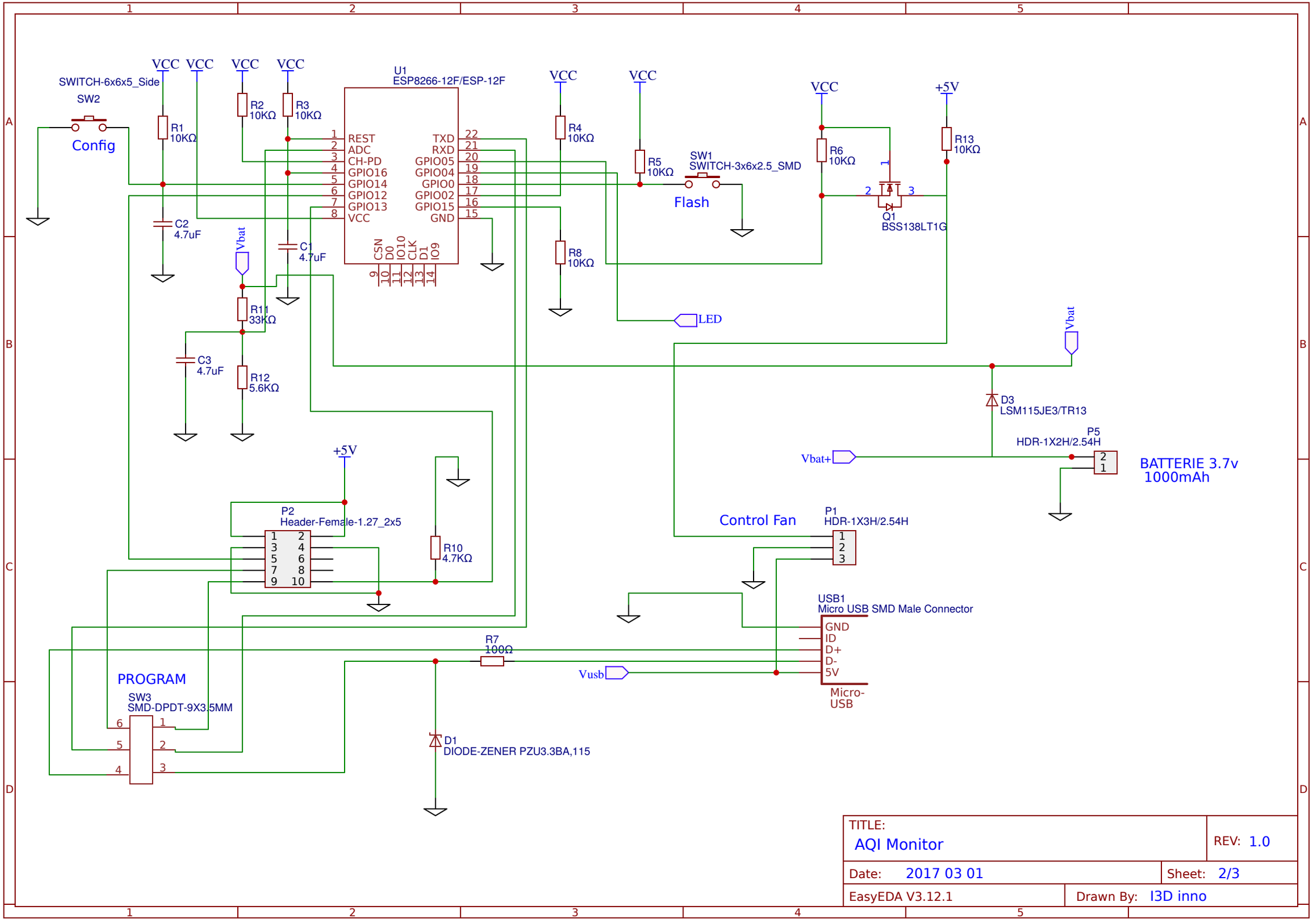

TITLE: AQI Monitor	REV: 1.0
Date: 2017 03 01	Sheet: 2/3
EasyEDA V3.12.1	Drawn By: I3D inno

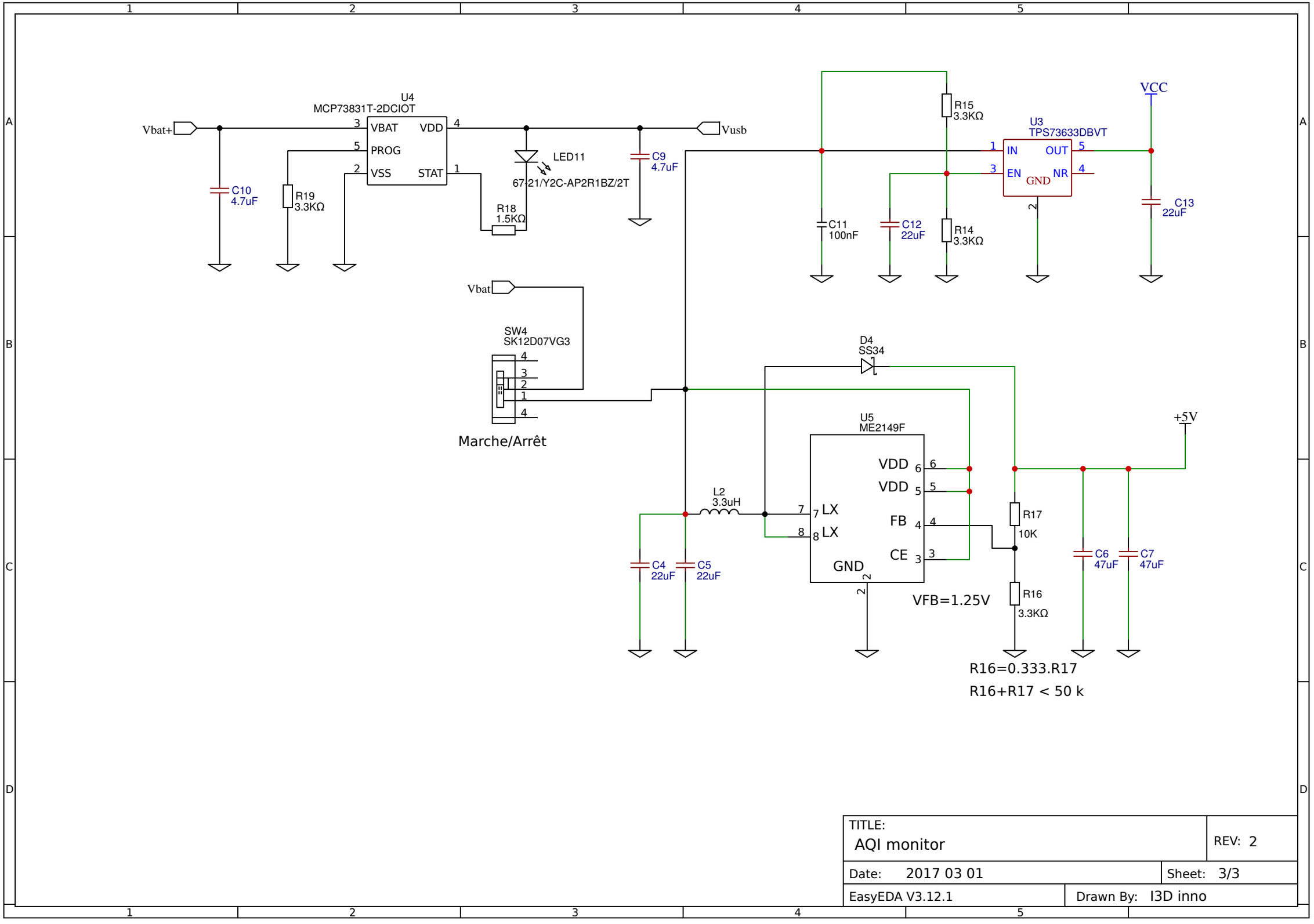

TITLE: AQI monitor	REV: 2
Date: 2017 03 01	Sheet: 3/3
EasyEDA V3.12.1	Drawn By: I3D inno