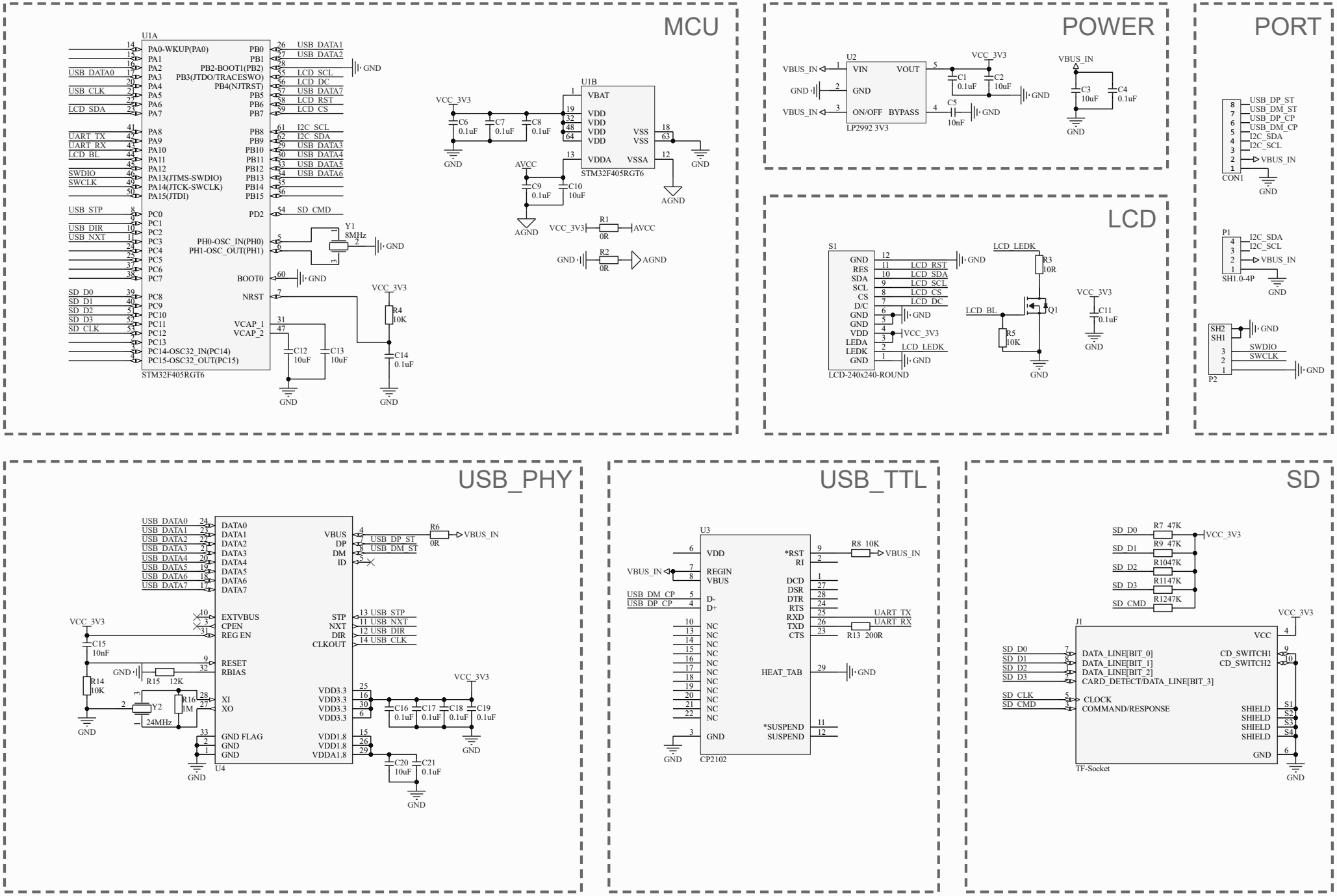
MCU
U1A
STM32F405RGT6
PA0-WKUP(PA0)
PA1
PA2
PA3
PA4
PA5
PA6
PA7
PA8
PA9
PA10
PA11
PA12
PA13(JTMS-SWDIO)
PA14(JTCK-SWCLK)
PA15(JTDI)
PC0
PC1
PC2
PC3
PC4
PC5
PC6
PC7
PC8
PC9
PC10
PC11
PC12
PC13
PC14-OSC32_IN(PC14)
PC15-OSC32_OUT(PC15)
PB0
PB1
PB2-BOOT1(PB2)
PB3(JTDO/TRACESWO)
PB4(NJTRST)
PB5
PB6
PB7
PB8
PB9
PB10
PB11
PB12
PB13
PB14
PB15
PD2
PH0-OSC_IN(PH0)
PH1-OSC_OUT(PH1)
BOOT0
NRST
VCAP_1
VCAP_2
USB_DATA0
UART_TX
UART_RX
LCD_BL
SWDIO
SWCLK
USB_STP
USB_DIR
USB_NXT
SD_D0
SD_D1
SD_D2
SD_D3
SD_CLK
USB_DATA1
USB_DATA2
LCD_SCL
LCD_DC
USB_DATA7
LCD_RST
LCD_CS
I2C_SCL
I2C_SDA
USB_DATA3
USB_DATA4
USB_DATA5
USB_DATA6
SD_CMD
Y1
8MHz
GND
VCC_3V3
R4
10K
C12
10uF
C13
10uF
C14
0.1uF
U1B
VBAT
VDD
VDD
VDD
VDD
VDDA
VSS
VSS
VSSA
STM32F405RGT6
C6
0.1uF
C7
0.1uF
C8
0.1uF
AVCC
C9
0.1uF
C10
10uF
AGND
R1
0R
R2
0R
POWER
U2
VIN
VOUT
GND
ON/OFF
BYPASS
LP2992 3V3
VBUS_IN
C1
0.1uF
C2
10uF
C5
10nF
C3
10uF
C4
0.1uF
PORT
CON1
USB_DP_ST
USB_DM_ST
USB_DP_CP
USB_DM_CP
I2C_SDA
I2C_SCL
VBUS_IN
P1
SH1.0-4P
P2
SWDIO
SWCLK
LCD
S1
LCD-240x240-ROUND
GND
RES
SDA
SCL
CS
D/C
VDD
LEDA
LEDK
LCD_RST
LCD_SDA
LCD_SCL
LCD_CS
LCD_DC
LCD_LEDK
R3
10R
Q1
R5
10K
C11
0.1uF
USB_PHY
U4
DATA0
DATA1
DATA2
DATA3
DATA4
DATA5
DATA6
DATA7
EXTVBUS
CPEN
REG EN
RESET
RBIAS
XI
XO
GND FLAG
VBUS
DP
DM
ID
STP
NXT
DIR
CLKOUT
VDD3.3
VDD1.8
VDDA1.8
R6
0R
C15
10nF
R14
10K
R15
12K
R16
1M
Y2
24MHz
C16
0.1uF
C17
0.1uF
C18
0.1uF
C19
0.1uF
C20
10uF
C21
0.1uF
USB_TTL
U3
CP2102
VDD
REGIN
VBUS
D-
D+
NC
GND
*RST
RI
DCD
DSR
DTR
RTS
RXD
TXD
CTS
HEAT_TAB
*SUSPEND
SUSPEND
R8 10K
UART_TX
UART_RX
R13 200R
SD
R7 47K
R9 47K
R1047K
R1147K
R1247K
J1
TF-Socket
DATA_LINE[BIT_0]
DATA_LINE[BIT_1]
DATA_LINE[BIT_2]
CARD_DETECT/DATA_LINE[BIT_3]
CLOCK
COMMAND/RESPONSE
VCC
CD_SWITCH1
CD_SWITCH2
SHIELD
S1
S2
S3
S4