6 (2026) 100263

Contents lists available at ScienceDirect

Neuroscience Informatics

journal homepage: www.elsevier.com/locate/neuri

Original article

From epilepsy seizure classification to detection: A deep learning-based approach for raw EEG signals

Davy Darankoum [a,b], Manon Villalba [a], Clélia Allioux [a], Baptiste Caraballo [a], Carine Dumont [a], Eloïse Gronlier [a], Corinne Roucard [a], Yann Roche [a], Chloé Habermacher [a], Sergei Grudinin [b,1,*], Julien Volle [a,1,*]

[a] SynapCell SAS, Saint-Ismier, 38330, France
[b] Univ. Grenoble Alpes, CNRS, Grenoble INP, LJK, Grenoble, 38000, France

ARTICLE INFO

Keywords:
Epilepsy
Raw EEGs
Seizure classification
Seizure detection
CNN
Transformer encoder

ABSTRACT

Epilepsy is the most prevalent neurological disorder in the world. Although epilepsy has been recognized for centuries, clinical doctors still lack reliable automated tools to diagnose epileptic seizures in electroencephalograms (EEGs). The research community has made significant efforts to develop automated systems for identifying and quantifying epileptic seizures, with many studies reporting excellent accuracy. However, clinicians continue to rely on manual annotations because automated techniques exhibit poor generalization performance when applied to EEG data from new patients. Another challenge in the field is translating the results of preclinical studies conducted on animals to clinical applications in humans.

This work contributes to both challenges. Firstly, we investigate the reasons behind the lack of generalization in automatic models. We find that most existing techniques are evaluated on seizure classification tasks, while clinical doctors primarily encounter detection tasks in their practice. We demonstrate that the performance of automated pipelines differs significantly between the two and identify the key distinction between the tasks: classification presumes a prior separation between seizure and non-seizure EEG signals, whereas detection requires no such prior knowledge. Secondly, we bridge the gap between preclinical and clinical studies by developing novel deep learning architectures. Our best model, trained on EEG data from epileptic mice, demonstrates excellent generalization with an F1-score of 93% when tested on human data.

1. Introduction

Epilepsy affects more than 50 million individuals worldwide and is characterized by recurring seizures arising from abnormal brain activity, profoundly impacting daily functioning and quality of life [1,2]. Epilepsy can appear through several syndromes, underscoring the need for precise and effective diagnosis to orient epileptic patients toward appropriate healthcare treatments [3]. Anti-seizure medications (ASMs) suffer from high patient-dependent responses. The development of accurate tools to extract specific information from epileptic patients appears to be paramount for developing better-suited medications.

Electroencephalogram (EEG) stands out as a pivotal tool in epilepsy diagnosis, thanks to its capacity to capture substantial alterations in brain electrical activity during and in proximity to epileptic seizures [4–6]. Neurologists classify brain activity into four distinguishable phases based on EEG inspection. The preictal phase represents the period preceding a seizure; the ictal phase corresponds to the actual seizure event; the postictal phase encompasses the time following a seizure episode; and the interictal phase constitutes the interval between seizure occurrences, distinct from the other states. Different analysis processes involving some or all of these four phases help neurologists diagnose the proper type of epilepsy [7]. Moreover, epileptic seizure identification and quantification are broadly used to evaluate the efficacy of new ASMs and disease-modifying therapies.

Among the different epilepsy syndromes, Mesial Temporal Lobe Epilepsy (MTLE), characterized by refractory seizures, is the most common type of focal epilepsy in adults. Approximately 30–50% of patients with MTLE develop drug resistance [8,9]. Considerable research endeavors presently focus on optimizing the preclinical stage of drug development for epilepsy to enhance translational success and improve the

* Corresponding authors.
E-mail addresses: sergei.grudinin@univ-grenoble-alpes.fr (S. Grudinin), jvolle@synapcell.fr (J. Volle).
URL: https://grulab.imag.fr (S. Grudinin), https://synapcell.com (J. Volle)
[1] These authors jointly supervised the work.

https://doi.org/10.1016/j.neuri.2026.100263
Received 16 January 2026; Accepted 20 January 2026
Available online 3 February 2026
2772-5286/© 2026 The Author(s). Published by Elsevier Masson SAS. This is an open access article under the CC BY license (http://creativecommons.org/licenses/by/4.0/).

likelihood of therapeutic candidates advancing through clinical trials. The preclinical phase designates a stage where studies are conducted on laboratory animals to identify the best treatment candidates among many and to determine safe doses in order to accelerate and increase success chances on the tests carried out on humans, namely the "clinical phase". The translational properties of EEG signals make them a valuable tool for monitoring brain activity in animal models, facilitating the extrapolation of findings to human brain function. However, due to a lack of accurate analysis tools, neurologists often review and interpret EEG signals manually, which leads to misidentification of epileptic seizures, inefficiencies, and subjectivity. Therefore, there is a need to develop automated techniques to identify seizures accurately and minimize diagnostic errors. This automation task is rather challenging given the complex characteristics of EEG signals, including their low signal-to-noise ratios, high-frequency dimension, non-stationarity, non-linearity, variability, and the presence of artifacts.

Thanks to the constant progress in machine learning-based techniques, many repetitive data annotation tasks can now be automated, thus affording minimal room for errors and liberating oneself from protracted, time-consuming activities [10–13]. These advances have also extended to seizure detection in EEG signals [14–16]. We can divide approaches that automate epileptic seizure detection through machine learning into two main categories. The first includes research focusing on hand-crafted feature extraction from EEG signals, followed by training classical machine learning or deep learning models to result in an epileptic seizure detection tool [17,18]. The second category tackles the task by training deep learning models to automatically extract meaningful features in EEG signals and simultaneously perform seizure detection. One can manually extract features from the EEG signals in multiple ways: in the time domain, frequency domain, time-frequency domain, or with nonlinear analysis [19,20]. A study introduced by Guo et al. [21] presents an epileptic seizure detection pipeline based on the computation of line-length features from wavelet transform-based signal decomposition, a technique that allows feature extraction from the time-frequency domain of EEG signals. Then, the authors used the extracted features with a Multi-Layer Perceptron Neural Network (MLPNN) to perform seizure detection. Their model achieved very high performance (98% accuracy on the classification into seizure and non-seizure segments) on the Bonn University dataset published by Andrzejak et al. [22]. In another study, Wang et al. [23] proposed a real-time seizure detection algorithm based on Short Time Fourier Transform (STFT), another technique to extract time-frequency domain features from the EEG, and then trained them with a Support Vector Machine (SVM), a machine learning-based model. The authors tested their pipeline on the CHB-MIT Scalp EEG database and achieved 98% sensitivity on the seizure detection task. Mursalin et al. [24] performed a correlation-based feature selection from the time domain and frequency domain of EEGs and then applied an ensemble of random forest classifiers (machine learning-based models) to detect seizures on EEG. On the Bonn University dataset, their model achieved 97% accuracy. Despite the high reported accuracies, the models developed for epileptic seizure detection and based on manual feature extraction exhibit several limitations, mainly regarding their capacity to generalize across diverse subject profiles and conditions [10]. This poor generalization indicates that some features invariant to variabilities across subjects' EEG signals might not be learned in the trained models. Moreover, the subject-dependent signal-to-noise ratio causes a high variability of feature importance for seizure detection. Some researchers attempted to overcome these limitations by developing deep learning models that automatically extract meaningful features in EEG signals by learning invariant embeddings.

Deep learning models, such as Convolutional Neural Networks (CNNs) and Recurrent Neural Networks (RNNs), are valuable tools for EEG classification. CNNs excel at extracting local features, while RNNs are effective at capturing long-range relationships. Together, they can help identify consistent and translational features that are essential for distinguishing between seizure and non-seizure segments in EEG data. Acharya et al. [25] proposed one of the first CNN-based networks trained on raw EEG time series to classify EEG signals into seizure and non-seizure activities. They achieved 89% accuracy on the Bonn University dataset. Roy et al. [26] applied different EEG pre-processing techniques coupled to several neural network architectures, namely, a 1D CNN, a 2D CNN, and a 1D CNN-GRU (Gated Recurrent Unit), to classify EEG signals into normal and abnormal activities. Their best model (1D-CNN-GRU) demonstrated 99% accuracy on the TUH Abnormal EEG Corpus [27]. Cho and Jang [28] compared four input modalities (raw time series EEG, periodograms that reflect the spectral density of EEG signals, 2D images from STFT coefficients, and 2D images from raw EEG waveforms) and different neural networks for an epileptic seizure detection task. They trained fully connected neural networks, RNNs, and CNNs, on unique or combined input types listed above. Their most effective pipeline achieved an accuracy of 99% on UPenn and Mayo Clinic's Seizure Detection challenge datasets.

This study presents the development of deep learning models to automatically detect epileptic seizures in EEG signals from an animal model of MTLE, the intra-hippocampal kainate mouse model. We chose to focus on MTLE due to its prevalence worldwide [29] and the nature of its seizures, which occur in a specific brain region. This specificity limits the effectiveness of common multi-electrode setups for EEG recordings. MTLE is a focal epilepsy type characterized by recurrent seizures with an onset involving the amygdalohippocampal complex and parahippocampal region. Consequently, seizures can be captured only using a single electrode positioned near the onset site. In contrast, non-focal epilepsy types involve seizures occurring across multiple brain regions, allowing for the use of multiple electrodes to capture them. Our second goal was the development of accurate tools for enhancing the preclinical studies workflow. We trained and validated the developed neural network architectures using EEG signals recorded on MTLE mice. We evaluated the generalization performance of our top-performing models by applying them to signals from human patients. Our exploration of multiple neural network architectures included convolutional neural networks, recurrent neural networks, segmentation U-Net-based models, and attention-based architectures. We further developed a post-processing algorithm that concatenates overlapping signal segments into a continuous time series, facilitating the detection of seizures in real-world scenarios. Finally, we identified two evaluation strategies for assessing model performance, which we believe are more effective for benchmarking the efficacy of automated seizure detection tools.

2. Materials and methods

2.1. Animals - MTLE mice model

Animal experiments were approved by the ethical committee of the Grenoble Institute of Neuroscience, University Grenoble Alpes, and performed by SynapCell in accordance with the European Committee Council directive of September 22, 2010 (2010/63/EU). Duveau and Roucard [30] has previously described detailed information about the generation of the MTLE mouse model. Briefly, adult male C57Bl/6J mice (11 weeks of age) receive a kainic acid injection in the right dorsal hippocampus (AP = -2, ML = -1.5, DV = -2 mm relative to bregma) [31]. During the surgical procedure, a bipolar electrode is positioned in the right dorsal hippocampus (AP = -2.4, ML = -1.5, DV = -2 mm relative to bregma). The implant is secured to the skull using dental cement to allow tethered EEG recordings in freely moving animals. After surgery, animals are left in their home cage for at least one week of recovery. After a four-week period of epileptogenesis, the mice became accustomed to the recording conditions, and EEGs were recorded to evaluate each animal. Various criteria, including the number of Hippocampal Paroxysmal Discharges (HPDs) and a sufficient signal-to-noise ratio, allowing a distinct determination of the beginning and end of events, were used to enroll animals in the study. The inclusion criteria remained consistent

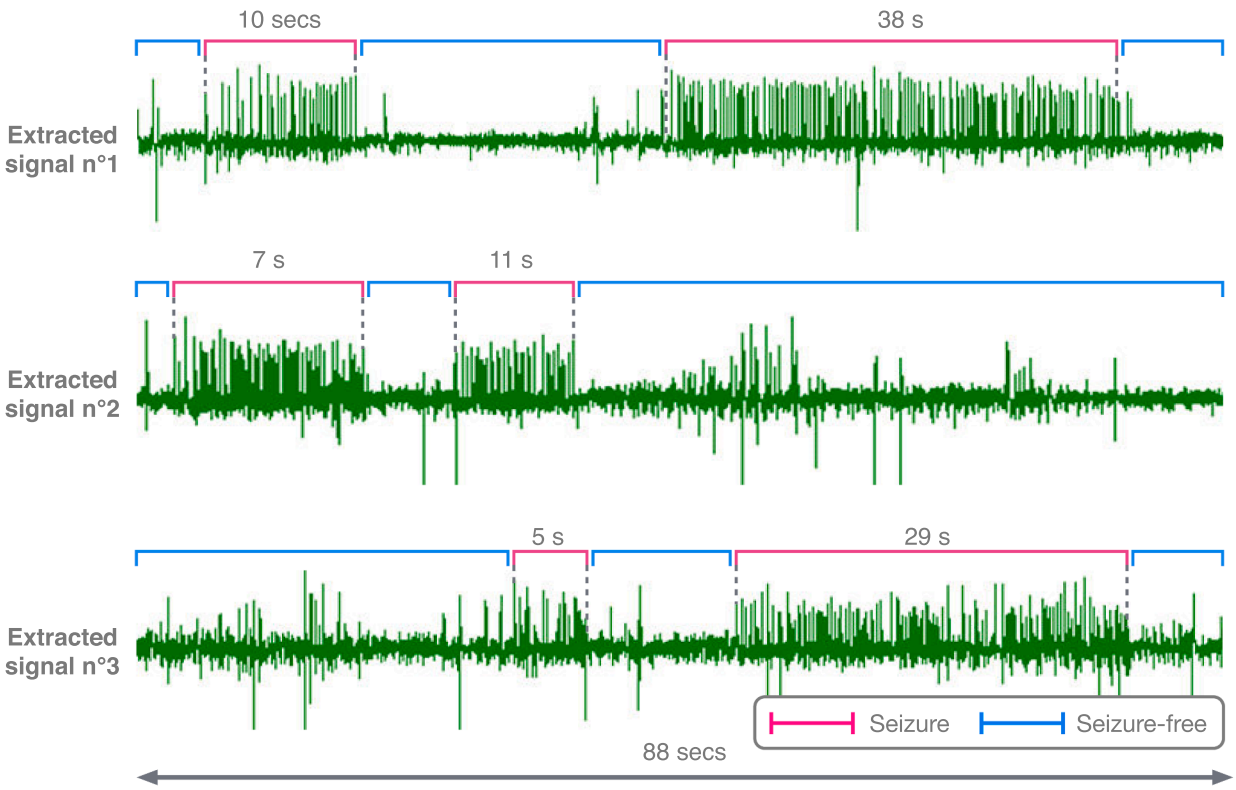

Fig. 1. Examples of EEG signals from Dataset 1. Snapshots of 3 portions of EEG signals measured in 3 mice and labeled by the same expert. Labels in red indicate detected seizures, and blue labels represent seizure-free activities. The total duration of the snapshots is 88 seconds. (For interpretation of the references to colour in this figure legend, the reader is referred to the web version of this article.)

throughout all experiments. During the study, animals are connected to an amplifier by a recording cable that does not restrict their movement. The EEG signal is band-pass filtered between 0.8 Hz and 1 kHz and digitized at 512 Hz (SDLTM128 Channels; Micromed, France). EEGs are stored for offline analysis, allowing experts to evaluate all the EEG traces and annotate the boundaries of each HPD.

2.2. Datasets

In our study, we used two datasets. Both contain EEG signals recorded from subjects suffering from MTLE. These were mice for the first dataset and humans for the second one.

Dataset 1. This dataset results from a selection of EEGs recorded in ten different studies conducted at SynapCell (Fig. 1). It includes 1440 hours of EEG signals recorded in 136 MTLE mice: 1190 hours of seizure-free activity and 250 hours of epileptic seizures. Each mouse is recorded, followed, on average, by three sessions, each lasting approximately 3 hours. An expert scorer has reviewed each signal and labeled ictal activities using commercial software for seizure detection (Deltamed Coherence, Natus Medical Incorporated, USA).

Dataset 2. The second dataset is public from Bonn University [22]. The dataset contains EEG signals recorded from both healthy humans and those suffering from MTLE. Although the signals were collected using a multi-channel setup, the authors only provide one-channel data. We selected this data for our study because it shares the same constraints of single-channel measurements as Dataset 1. Additionally, it enables us to evaluate the generalization abilities of our models from the preclinical setting to a clinical environment. The dataset comprises five different sets, denoted from A to E. Each contains 100 EEG segments of 23.6 sec. These segments result from continuous EEG recordings processed by the authors to remove artifacts. In total, the authors recorded EEG signals from ten humans: five healthy and five diagnosed with MTLE. The EEG signals recorded through the head surface of the five healthy volunteers formed sets A and B. Set A consists of EEGs recorded with eyes open and set B with eyes closed. Presurgical EEGs from five patients suffering from MTLE were used to constitute sets C, D, and E. Set D comprises EEGs recorded from the epileptogenic zone. Set C comprises EEGs measured from the hippocampal structure of the opposite hemisphere. Segments in sets C and D contain only the brain activity measured during seizure-free intervals, whereas set E contains EEG segments recorded through the epileptogenic zone (the hippocampal structure on the hemisphere from which the seizures originate) during seizure activity. The authors recorded all EEG signals from these sets at a sampling rate of 173.61 Hz and employed a bandpass filter to keep frequencies only between 0.53 and 40 Hz.

2.3. Pre-processing and post-processing pipelines

2.3.1. Dataset 1

We used Dataset 1 to train models for two tasks: seizure classification and seizure detection. Fig. 2 lists the processing stages, including data pre-processing, post-processing, and model evaluation.

Pre-processing with prior identification of seizure/seizure-free activity (Pre-processing I). We pre-process each EEG signal individually. Firstly, the signal is resampled from 512 Hz to 100 Hz. The resulting downsampled signal is filtered with a bandpass-finite impulse response (FIR) filter between 1 and 20 Hz. We selected downsampling and filtering parameters based on their impact on the trained models' accuracy. Then, we annotated continuous ranges of epileptic and seizure-free activity according to the onset and offset intervals of seizures labeled by experts. We then applied a Z-score normalization to the signal amplitudes. The mean and variance for the normalization are computed on the

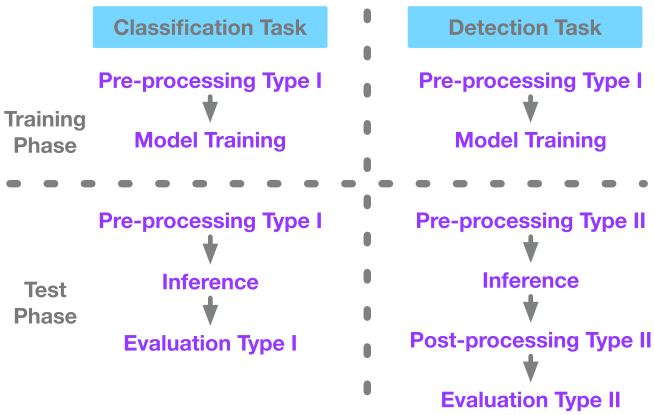

Fig. 2. Task-based (Classification and Detection) pipelines summary.

selection of all the amplitudes extracted from the seizure-free activity of the signal. Finally, we segmented each range of seizure and seizure-free activities separately into 2- or 4-second blocks with variable overlap (or shift) size. The overlap is the common signal between two consecutive blocks, and the shift denotes the signal length between the start points of two successive blocks. This pre-processing procedure results in 2- or 4-second blocks that do not contain mixed activities (seizure and seizure-free, see Fig. 3).

Pre-processing without prior identification of seizure/seizure-free activity (Pre-processing II). Here, we also pre-process each EEG signal individually. The same resampling from 512 Hz to 100 Hz and bandpass filter from 1 to 20 Hz is applied. We then perform the Z-score normalization of the signal amplitudes as before. The mean and variance for the normalization are, however, computed using only the first 5 minutes of the signal. Finally, using a sliding window starting at time zero, the signal is segmented into overlapped 2- or 4-second blocks. It is worth noting that during this pre-processing procedure, the segmentation into 2- or 4-second blocks is applied without any prior distinction between seizure and seizure-free activities to mimic a real-world scenario. Such pre-processing will lead to 2- or 4-second blocks containing mixed activities (seizure and seizure-free, see Fig. 4).

Post-processing for signal reconstitution (Post-processing II). Following the application of the model at inference time to segments pre-processed without prior identification of seizure/seizure-free activity (Pre-processing II), we obtain a list of segments with labels predicted as seizures or non-seizures. Then, we apply an ad-hoc post-processing algorithm to combine these segments and reconstruct the original signal. Segments with overlapping ranges are merged into a single range, and the predominant label is assigned to it. The procedure is iteratively applied until it produces a new set of labels on the continuous reconstructed EEG signal. We then compare this reconstructed signal to the original one, following the evaluation II strategy.

Evaluation strategy for seizure classification (Evaluation I). After applying the model at inference time to segments pre-processed with prior identification of seizure/seizure-free activity (Pre-processing I), we obtain a list of segments classified as either seizure or seizure-free activities – one label per segment. This categorization enables us to compute the following metrics: true positives (TP), which are segments predicted as "seizure" when the actual label is also "seizure"; true negatives (TN), which are segments predicted as "non-seizure" when the actual label is also "non-seizure"; false positives (FP), which are segments predicted as "seizure" when the true label is "non-seizure"; and false negatives (FN), which are segments predicted as "non-seizure" when the actual label is "seizure."

Evaluation strategy for seizure detection (Evaluation II). This evaluation strategy aims to build a reliable metric for the seizure detection task. After signal reconstruction following the post-processing II method, we used an event-based metric previously introduced by [32] to evaluate models. We have adapted this evaluation method to the seizure detection task to compare each event (seizure) detected by the model to events labeled by the expert. We classify events as follows. **TP (True Positive) :** an event detected by the model that overlaps with an event labeled by an expert within a tolerance range of 1 second. The start of the detected event must be in a range of $\pm$ 1 second of the beginning of the labeled event and likewise for the end of the two events. **FN (False Negative) :** an event labeled by the expert that has not been found in a corresponding event detected by the model within the ($\pm$) 1-second tolerance. **FP (False Positive) :** an event detected by the model that has not been found in a corresponding event labeled by the expert within the ($\pm$) 1-second tolerance.

2.3.2. Dataset 2

Dataset 2 (Bonn public dataset) consists of signals already separated into seizure and non-seizure activities. Therefore, we could only perform a classification task on this dataset, as the detection task requires processing continuous signals containing both seizure and non-seizure activities.

To facilitate a comparison with Dataset 1, we also downsampled each signal of 23.6 seconds, from 173.61 Hz to 100 Hz. Then, a Z-score normalization is applied using the mean and variance calculated from sets A, B, C, or D, or a combination of some of them (refer to the subset description below). Initially, the Bonn dataset was unbalanced, with 100 segments (Set E) related to seizure activity and 400 segments (Sets A, B, C, and D) labeled as seizure-free activity. To evaluate the robustness of our models, we introduced three balance ratios of the two classes by selecting different set combinations as follows:

- **Subset 1:** a dataset constructed of sets A, B, C, D, and E. It is unbalanced, with 80% of seizure-free activity and 20% of seizure activity.
- **Subset 2:** a dataset constructed of sets A, B, and E. It is unbalanced, with 66.6% of seizure-free activity and 33.3% of seizure activity.
- **Subset 3:** a dataset formed of sets C and E. The balance is 50% of seizure-free activity and 50% of seizure activity. In all the assembled subsets, we used segmentation into blocks of 4 seconds with 50% overlap. We finally used the evaluation for seizure classification (Evaluation I) strategy to compute TP, TN, FP, and FN metrics.

2.3.3. Training, validation, and test sets

We employed a rigorous data-splitting method to ensure data integrity and prevent any data leakage in Dataset 1. Specifically, if a signal from animal A was included in the training set, we ensured that no other signals from the same animal A were present in either the validation or test sets.

Out of 136 animals, we randomly selected 100 to make up the training set, 19 for the validation set, and the remaining 17 for the test set. The EEG signals recorded from these selected animals were then assigned to each of the three groups.

- **Training set:** EEGs recorded from the selected 100 animals correspond to 184 hours of epileptic seizure activity and 870 hours of seizure-free activity. To balance the training set, we selected 200 hours of seizure-free activity among the 870 hours.
- **Validation set:** EEGs recorded from the selected 19 animals correspond to 44 hours of epileptic seizure activity and 210 hours of seizure-free activity. To facilitate a more straightforward evaluation of the model during training, we selected 50 hours of seizure-free activity among the 210 hours to balance the validation set.
- **Test set:** EEGs recorded from the selected 17 animals correspond to 22 hours of seizure activity and 110 hours of seizure-free activity. We kept the test set unbalanced to evaluate the models' generalization capabilities in a real-world scenario.

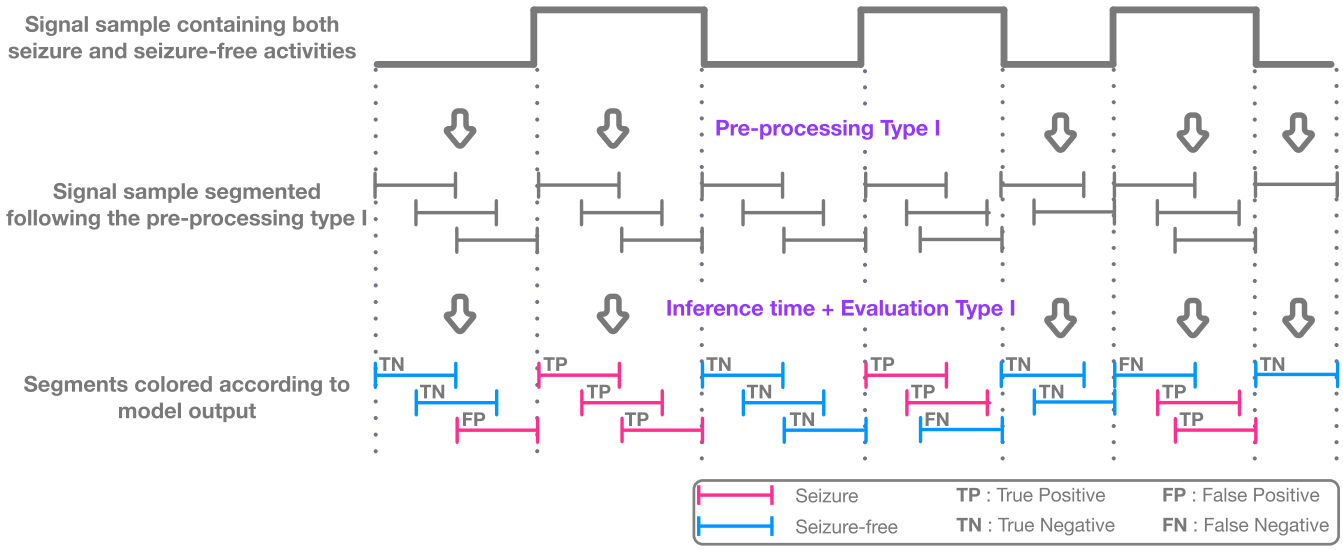

Fig. 3. Illustration of the classification task pipeline at inference time. Segments built out of **pre-processing I**, do not overlap across two activities. Segments colored in blue or red reflect an example of classification by the trained model. Blue color corresponds to classification into seizure-free activity. The red color indicates classification into seizure activity. **TP:** Segment labeled as seizure and detected as seizure by the model.**TN:** Segment labeled as seizure-free and detected as seizure-free. **FP:** Segment labeled as seizure-free and detected as seizure by the model. **FN:** Segment labeled as seizure and detected as seizure-free. (For interpretation of the references to colour in this figure legend, the reader is referred to the web version of this article.)

In this study, Dataset 2 is used entirely as a test set to evaluate the generalization capabilities of our best models.

2.4. Network architectures

2.4.1. CNN-based architectures

Convolutional neural networks excel at identifying local patterns in images or time series [26]. The principal element of this network is a convolutional layer followed by a nonlinear activation function and, very often, resolution reduction operations such as maximum/average pooling layers.

Classical CNN architectures. We constructed these CNN-based network architectures by combining convolutional layers, batch normalization layers, Rectified Linear Units (ReLUs), max pooling layers, SoftMax activation functions, and dense layers. We rigorously applied the following order to all the constructed CNN-based architectures. They all start with a convolutional layer followed by a batch normalization layer, a ReLU activation function, and a max pooling layer. These blocks of four grouped layers are linked consecutively multiple times (3, 5, 6, 12, or 16). Two dense layers separated by a ReLU function follow these blocks, and, finally, we apply a SoftMax activation function to the learned embeddings for final classification into epileptic/seizure-free activity.

Customized U-Time architectures. U-Time [33] is a modified version of U-Net [34], a network where the term "U" refers to the shape of the network architecture. It is composed of CNN-based downstream and upstream components. The downstream part consists of convolutional, pooling, batch normalization, and activation layers. The upstream part has a similar architecture, except that upsampling layers replace pooling operations. They increase the data dimensionality previously reduced by pooling layers in the downstream part. These networks were specifically designed for segmentation tasks. Indeed, the original U-Net excels at image segmentation. The authors of U-Time have specifically adapted it for time series, such as EEG signals. To adjust the U-Time network to our seizure detection task, we removed the classifier segment.

2.4.2. CNN + RNN-based architecture

Recurrent neural networks (RNNs) feature a bi-directional flow. The outputs of some nodes, combined with their subsequent inputs, create a dependency between inputs and outputs, distinguishing RNNs from feed-forward networks like CNNs. Another notable characteristic of RNNs is that they share parameters across layers, meaning that the weights are consistent within each layer. In contrast, feed-forward networks typically use different weights for each node. RNNs are particularly suited for capturing long-term relationships in time series [26]. However, traditional RNN layers often face vanishing gradients. This limitation led to the development of long short-term memory (LSTM) layers [35] and gated recurrent unit (GRU) layers [36], inspired by classical RNN layers and less exposed to the gradient vanishing problem. We have combined CNN layers with either LSTM or GRU layers for our classification and seizure detection tasks.

2.4.3. CNN + Transformer architecture

The transformer architecture described in Vaswani et al. [37] comprises an encoder and a decoder part. In our study, we focused solely on the encoder part, as our tasks do not involve data generation. The encoder architecture includes a multi-head attention network that computes attention scores on pairs of EEG sequences, and a position-wise fully connected feed-forward network. Each of these components is followed by a residual connection and layer normalization. Fig. 5 shows our CNN + Transformer architecture, featuring a two-head attention network that integrates embeddings from raw EEG signals with positional encodings. The input embeddings are learned through two CNN-based networks, each containing six convolutional blocks. The first CNN network uses convolution kernels of size 3, while the second employs kernels of size 10 to capture frequency information across different scales [38]. The positional encodings utilize the rotary position embedding (RoPE) introduced by Su et al. [39].

2.5. Computational details

We trained all the models for 100 epochs using the PyTorch framework and the Adam optimizer. Hyperparameter optimization of the models (learning rate, number of epochs) was conducted on the validation set, and we specifically used the binary cross-entropy (BCE) loss function to tune the training performance. The computing resource used to train the models was an NVIDIA Tesla V100 GPU cluster with a single node containing 32 GB RAM.

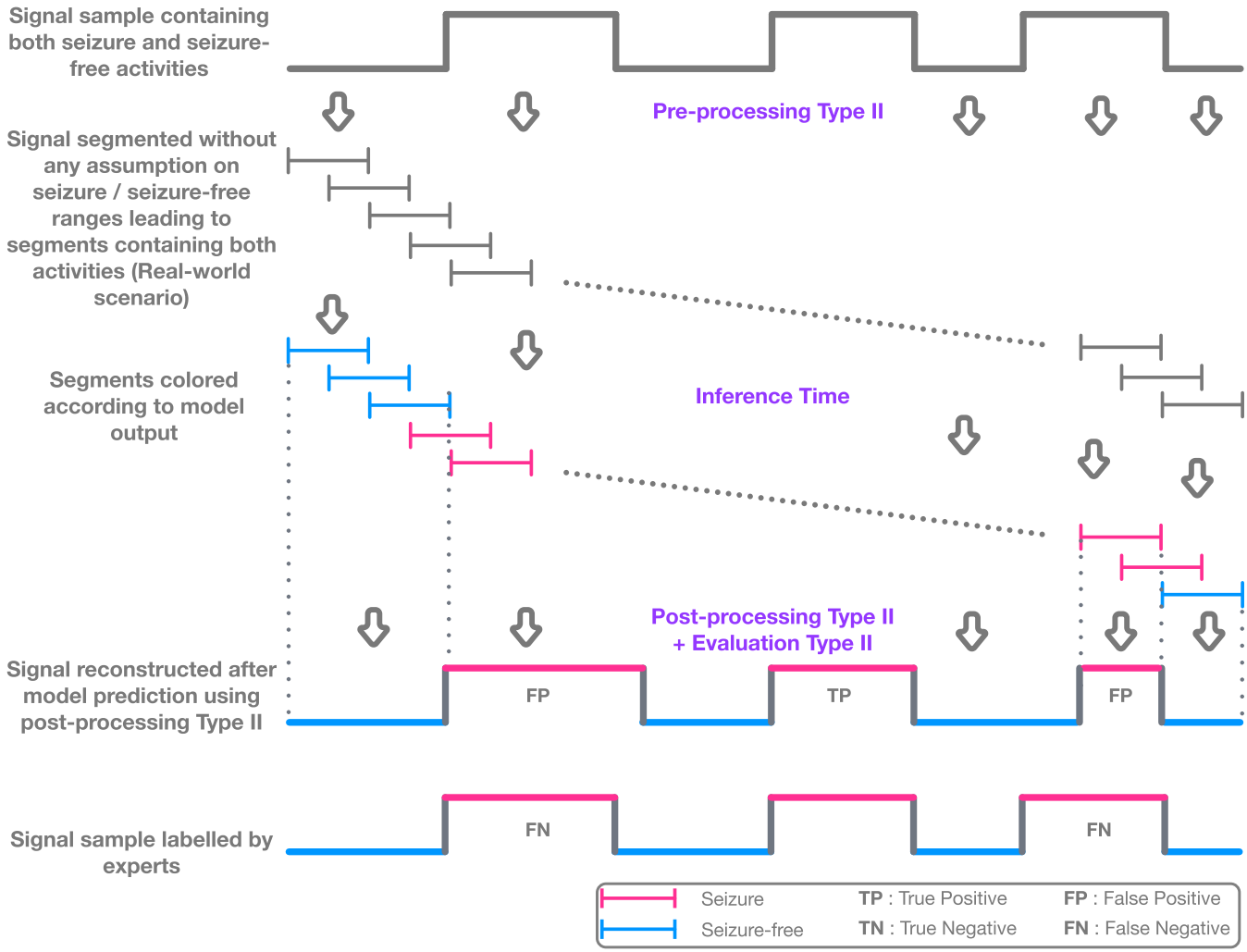

Fig. 4. Illustration of the detection task pipeline at inference time. Segments built out of **pre-processing II**, do overlap across activities exhibiting a real-world scenario. Segments predicted through the model application are re-assembled into a continuous signal using **post-processing II**. Finally, following **evaluation II** strategy, events formed in the reconstituted signal are compared with events labeled by the expert. **TP:** A seizure start & end labeled by the expert matches a seizure start & end detected by the model. **FP:** A seizure start & end detected by the model did not find a match with any seizure start & end labeled by the expert. **FN:** A seizure start & end labeled by the expert did not find a match with any seizure start & end detected by the model.

2.6. Performance metrics

We considered the "seizure" state as the positive class and the "seizure-free" state as the negative class. Our main metrics are accuracy, sensitivity, precision, and F1-score. Accuracy indicates the ratio of correct predictions made by the model to the total number of predictions:

$$\text{Accuracy} = \frac{\text{Number of Correct Predictions}}{\text{Total Number of Predictions}}. \tag{1}$$

Sensitivity, also called recall, is defined as the proportion of correctly categorized positive segments to all positive segments:

$$\text{Recall} = \frac{\text{True Positives}}{\text{True Positives} + \text{False Negatives}}. \tag{2}$$

Precision, the ratio of correctly predicted "seizure" segments to all segments predicted as "seizure", is defined as:

$$\text{Precision} = \frac{\text{True Positives}}{\text{True Positives} + \text{False Positives}}. \tag{3}$$

Finally, the F1-score is a metric that combines precision and recall to evaluate the model's performance. It considers both false positives and false negatives:

$$\text{F1} - \text{score} = \frac{2 \times \text{Precision} \times \text{Recall}}{\text{Precision} + \text{Recall}}. \tag{4}$$

3. Results

This section reports results on two tasks and two datasets. On Dataset 1 (mouse EEGs), we compare CNNs, customized U-Time, CNN + RNN hybrids, and CNN + Transformer architectures for the segment-level seizure classification task. We then contrast classification with the event-level detection task across different window/shift settings. Finally, we evaluate the generalization capability of our best architectures by training on Dataset 1 and testing on human EEGs (Dataset 2). Tables 1–3 list the results, where the best models (with respect to the F1-score) are highlighted in bold.

3.1. Dataset 1: Comparison of models for the seizure classification task

Across CNNs with 3–16 convolutional layers, the 6-layer CNN offers the best accuracy–capacity trade-off. Indeed, it attains an F1-score of **0.818** with only **23k** trainable parameters (recall = 0.926). Both deeper and shallower architectures failed to provide consistent improvements,

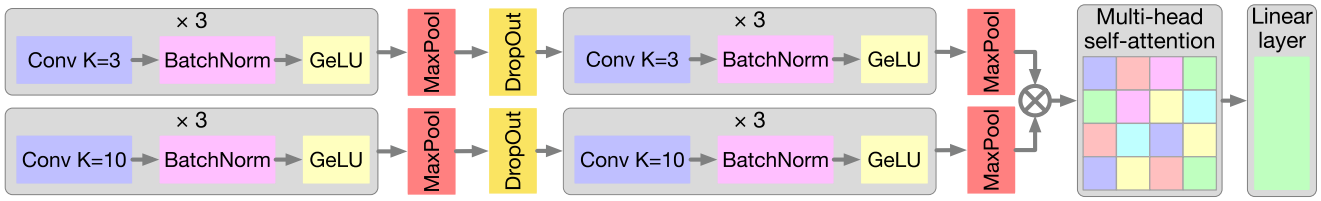

Fig. 5. Schematic representation of the dual path CNN + Transformer architecture. K denotes the kernel size.

Table 1
Seizure classification task results on Dataset 1. All runs use 4 sec. windows with 2 sec. shifts.

Model	Params	Recall	F1-score
CNN – 3 layers	2.5 M	0.909	0.818
CNN – 5 layers	159 K	0.919	0.818
CNN – 6 layers	23 K	0.926	0.818
CNN – 12 layers	216 K	0.918	0.816
CNN – 16 layers	258 K	0.907	0.807
Custom. U-Time – 17 conv	236 K	0.876	0.656
Custom. U-Time – 22 conv	943 K	0.900	0.726
CNN-6 + biLSTM	2.6 M	0.888	0.814
CNN-6 + GRU	2.6 M	0.895	0.808
CNN + Transformer	**158 K**	**0.898**	**0.868**

Table 2
Comparison of model performance on *classification* vs. *detection* tasks on Dataset 1. We report two types of **window/shift** settings for classification and four types for detection.

Model	F1-score (Classification)		F1-score (Detection)			
	4 s / 2 s	2 s / 1 s	4 s / 2 s	4 s / 0.5 s	2 s / 1 s	2 s / 0.5 s
CNN — 6 layers	0.818	0.722	0.000	0.182	0.381	0.496
CNN-6 + biLSTM	0.814	0.725	0.000	0.160	0.242	0.377
Customized U-Time	0.726	0.694	0.000	0.000	0.000	0.000
CNN + Transformer	**0.868**	**0.818**	**0.363**	**0.565**	**0.481**	**0.529**

despite some having larger model sizes. Customized U-Time variants underperform the CNN baselines (F1 = 0.656–0.726). Adding recurrent layers (biLSTM/GRU) to CNN-6 substantially increases capacity (2.6M parameters) without improving F1 (0.808–0.814). By contrast, coupling the 6-layer CNN with a Transformer encoder markedly improves performance to **F1 = 0.868** with **158k** parameters, indicating that attention captures temporal dependencies more efficiently than recurrent layers for this task (Table 1).

3.2. Seizure classification vs seizure detection tasks

We next evaluated the same architectures under the *event-based detection* protocol (the seizure detection task). We tested different segment sizes (2 and 4 sec.-long) associated with different overlaps (or shifts). As expected, detection is substantially harder than classification. Indeed, F1-score values drop across the board (Table 2). Finer strides consistently help—**0.5 sec.** shifts yield higher detection F1 than 1 or 2 sec. shifts. The **CNN + Transformer** remains the top performer, peaking at **F1 = 0.565** with 4 sec. windows and 0.5 sec. shifts; with 2 sec. windows, it reaches F1 = 0.529 (0.5 sec. shift) and dummyTXdummy- 0.481 (1 sec. shift). In contrast, CNN-only and CNN + RNN models degrade sharply under the detection task, reflecting difficulties with boundary localization once segments can contain mixed activities. Taken together, these findings underscore two points: (i) a segment-level classification task can overestimate real-world detection capability, and (ii) denser overlaps improve event reconstruction and boundary precision in the detection task.

Table 3
Performance of our two best architectures when trained on Dataset 1 (mice) and evaluated on Dataset 2 (humans; Bonn). Subset definitions: *Subset 1*: Seizure = Set E; Non-seizure = Sets A,B,C,D. *Subset 2*: Seizure = Set E; Non-seizure = Sets A,B. *Subset 3*: Seizure = Set E; Non-seizure = Set C.

Model	Subset 1		Subset 2		Subset 3	
	Recall	F1-score	Recall	F1-score	Recall	F1-score
CNN — 6 layers	0.956	0.627	0.952	0.638	0.950	0.908
CNN + Transformer	**0.904**	**0.888**	**0.896**	**0.852**	**0.893**	**0.935**

3.3. Training on dataset 1 (mice) and testing on dataset 2 (humans)

One goal of preclinical studies is to enhance risk management and anticipate outcomes in future human experiments. Following this motivation, we trained our two best architectures (CNN-6 and CNN + Transformer) on mouse EEGs (Dataset 1) and evaluated them on human EEGs (Dataset 2; Bonn subsets). Table 3 lists the results. The **CNN + Transformer** architecture demonstrates strong robustness and generalization. On unbalanced Subsets 1–2, it achieves F1-score of 0.888 and 0.852, respectively, while **CNN-6** exhibits very high recall (0.952–0.956) but modest F1-score (0.627–0.638), indicating many false positives. On the balanced Subset 3, both models improve. CNN + Transformer reaches **F1-score of 0.935** (recall of 0.893) and CNN-6 reaches F1-score of 0.908 (recall of 0.950). These results suggest that attention-based models translate seizure-related signatures learned in mice to humans more robustly than CNNs alone, especially under class imbalance.

4. Discussions and perspectives

The application of machine learning algorithms, including deep learning neural networks, has witnessed significant progress in detecting seizure activity from electroencephalography (EEG) recordings over the past few decades. This advancement holds promise for enhancing clinical treatment outcomes and deepening our understanding of the underlying neurobiological mechanisms. Notably, since the early 90s, numerous studies have consistently demonstrated that machine learning can identify seizures with high sensitivity, often exceeding 95% [40,41]. However, these studies typically have high rates of false positive detections. As a result, they struggle with generalization across subjects, highlighting the need for continued refinement of these approaches.

4.1. Challenges of dataset size and feature engineering

The increasing use of deep learning techniques for analyzing raw EEG data has been limited by the small size of many EEG datasets, which poses challenges for training reliable models. Collecting large datasets can be both resource-intensive and time-consuming, often exceeding the capabilities of smaller research centers. Previously, the standard approaches involved manually creating features and applying machine learning or deep learning methods alongside traditional explainability techniques [14,42–45]. These manually extracted features typically captured aspects of the data in the time domain and/or frequency domain. While effective, these methods are inherently restricted by the limited

feature space available for learning. In contrast, deep learning methods, such as CNNs, can automatically learn features by creating robust embedding spaces, making them an appealing solution for raw EEG analysis [46,47]. In this study, we leverage a large dataset collected under consistent conditions (hardware and recording parameters) in an animal model of MTLE, enabling the effective use of CNNs and transformers with raw electrophysiological signals.

4.2. Preventing data leakage in EEG-based studies

One of the key strengths of this study lies in its consideration of the potential for data leakage during dataset training. A common pitfall in EEG-based studies is the random assignment of segments to training and test sets, which results in data samples from individual subjects being parts of both sets. Such assignments can lead to data leakage. Indeed, EEG segments from a single subject may appear in both the training and test sets, thus artificially inflating model performance. A recent study by Brookshire et al. [48] highlighted the importance of addressing this issue by comparing the performance of deep neural network (DNN) classifiers using segment-based holdout (where segments from one subject can appear in both sets) versus subject-based holdout (where all segments from one subject are exclusive to either the training or test set). The authors demonstrated that segment-based holdout can lead to a significant overestimation of the model's performance on previously unseen subjects. Alarmingly, they found that most translational DNN-EEG studies employ segment-based holdout, which may result in a dramatic overestimation of the model's performance on new subjects [47,49]. To ensure an accurate assessment of our model, we designed a rigorous approach by including each subject's data exclusively in either the training or the test sets, but never in both.

4.3. Limitations of conventional pre-processing and evaluation strategies

All existing methods for seizure detection begin with a pre-processing step that separates seizure activities from non-seizure activities. This process typically involves segmenting the data into small blocks to create training and testing sets. However, such a pre-processing often leads to an artificially idealized data structure, where each small block contains only seizure or seizure-free activities. In this study, we demonstrate that such a pre-processing pipeline tends to overestimate the performance of seizure detection systems. To more accurately reflect the real-world challenges in automatic seizure detection, it is crucial to develop pipelines that do not differentiate between seizure and seizure-free activities, as in the proposed Pre-processing II method.

Additionally, models should primarily be evaluated based on their ability to accurately detect the onset and offset of seizures in continuous EEG signals (see the Post-processing II and Evaluation II methods). The Post-processing II algorithm reconstructs continuous EEG signals from overlapping segments while maintaining a temporal resolution of 500 ms. This improvement enhances the model's precision and facilitates comparisons between the predicted and labeled onsets/offsets of seizures. The analysis of two distinct evaluation strategies (Evaluation I and Evaluation II) underscores the fundamental differences between the classification and detection tasks of seizures in EEG signals.

4.4. Robustness and trans-species adaptability of our approach, futur directions

One of the most exciting aspects of this study is the robustness of our approach, which yields comparable performance metrics to some commercial systems [50], even when faced with modifications to the recording setup, changes in recording conditions, or differences in environment (experimental/clinical) or species (mouse/human) [51]. This versatility underscores the potential of our approach to transcend traditional boundaries and facilitate seamless translation between preclinical research and clinical applications. Our results demonstrate the capabilities of the proposed approach in both clinical and research environments, offering a valuable tool to aid experts in alleviating the burden of annotating extensive hours-long EEG recordings. Furthermore, the trans-species adaptability of our approach may facilitate a deeper understanding of the differences and similarities between human diseases and animal models. Notably, to the best of our knowledge, this study is one of the few to validate a high-performance detection algorithm for HPDs on comprehensive EEG datasets from both animal (mice MTLE dataset) and human (Bonn dataset) subjects. The detection performance of our proposed method suggests that this approach can be reliably applied in preclinical research and clinical settings, paving the way for future studies to explore its potential in real-world applications. Future work should focus on validating this framework using extended EEG data with diverse seizure types to evaluate its specificity and expand its applications. Additionally, it would be beneficial to validate our pipeline on other animal models to enable its broader use in preclinical research. Although our methodology demonstrates promising results in terms of generalization capabilities, it would be valuable to apply explainability methods to gain insights into the features learned by the model. Our approach, which utilizes deep neural networks trained directly on raw EEG data, complicates this objective. This presents a significant disadvantage compared to pipelines that rely on models trained with extracted features, where relatively straightforward studies can effectively highlight the contributions of various features to seizure detection [52].

5. Conclusion

This work presents a novel pipeline for seizure detection, incorporating both pre-processing and post-processing techniques suited for real-world applications. Our experiments demonstrated that overlooking these real-world scenarios may result in an inflated perception of the model's performance. We explored various architectures for the seizure detection task, including CNNs, RNNs, segmentation models, and transformer-based architectures. Our findings indicated that the best-performing model combines a CNN with a transformer encoder, showcasing strong generalization capabilities. We trained it on raw EEG signals from animals and tested it on raw EEG data from humans, further highlighting its robust generalization abilities.

Ethics statement

Animal experiments were approved by the ethical committee of the Grenoble Institute of Neuroscience, University Grenoble Alpes, and performed by SynapCell in accordance with the European Committee Council directive of September 22, 2010 (2010/63/EU). Human data was taken from the public datasets.

CRediT authorship contribution statement

Davy Darankoum: Writing – review & editing, Writing – original draft, Visualization, Validation, Software, Methodology, Investigation, Formal analysis, Data curation, Conceptualization. Manon Villalba: Investigation. Clélia Allioux: Investigation. Baptiste Caraballo: Investigation. Carine Dumont: Investigation. Eloïse Gronlier: Investigation. Corinne Roucard: Writing – Review & Editing, Project administration. Yann Roche: Writing – Review & Editing, Funding acquisition. Chloé Habermacher: Writing – Review & Editing, Validation. Julien Volle: Writing – Review & Editing, Supervision, Conceptualization. Sergei Grudinin: Writing – Review & Editing, Supervision, Conceptualization.

Funding statement

This work was funded by SynapCell SAS through the Cortex project, which was awarded at the 9th edition of the i-Nov competition organized for French companies. The research has been conducted using both SynapCell and Laboratoire Jean Kuntzmann (CNRS/UGA) resources.

Data availability statement

Dataset 1 can be made available to independent researchers upon receipt of a valid research proposal, a data analysis plan, and a summary of the researcher's qualifications. Requests may be submitted to SynapCell at https://synapcell.com/contact-us/. The provision of data is subject to business feasibility and the execution of a data use agreement.

The Bonn EEG time series (Dataset 2) is available at https://repositori.upf.edu/handle/10230/42894.

Declaration of competing interest

Davy Darankoum, Manon Villalba, Clélia Allioux, Baptiste Caraballo, Carine Dumont, Eloïse Gronlier, Corinne Roucard, Yann Roche, Chloé Habermacher, and Julien Volle are employees of SynapCell SAS. Sergei Grudinin has no conflicts of interest to declare.

References

[1] R.D. Thijs, R. Surges, T.J. O'Brien, J.W. Sander, Epilepsy in adults, The Lancet 393(10172) (2019) 689–701. https://doi.org/10.1016/S0140-6736(18)32596-0

[2] E. Beghi, The epidemiology of epilepsy, Neuroepidemiology 54(2) (2020) 185–191. https://doi.org/10.1159/000503831

[3] R. Nabbout, M. Kuchenbuch, Impact of predictive, preventive and precision medicine strategies in epilepsy, Nature Rev. Neurol. 16(12) (2020) 674–688. https://doi.org/10.1038/s41582-020-0409-4

[4] S. Noachtar, J. Rémi, The role of EEG in epilepsy: a critical review, Epilepsy Behav. 15(1) (2009) 22–33. https://doi.org/10.1016/j.yebeh.2009.02.035

[5] B. Mesraoua, D. Deleu, H. Al Hail, G. Melikyan, P. Boon, H.A. Haider, A.A. Asadi-Pooya, Electroencephalography in epilepsy: look for what could be beyond the visual inspection, Neurological Sciences 40(11) (2019) 2287–2291. https://doi.org/10.1007/s10072-019-04026-8

[6] T. Shoji, N. Yoshida, T. Tanaka, Automated detection of abnormalities from an EEG recording of epilepsy patients with a compact convolutional neural network, Biomed. Signal Process. Control 70 (2021) 103013. https://doi.org/10.1016/j.bspc.2021.103013

[7] S. Toraman, Automatic recognition of preictal and interictal EEG signals using 1d-capsule networks, Comput. Electr. Eng. 91 (2021) 107033. https://doi.org/10.1016/j.compeleceng.2021.107033

[8] E. Paschen, C. Elgueta, K. Heining, D.M. Vieira, P. Kleis, C. Orcinha, U. Häussler, M. Bartos, U. Egert, P. Janz, C.A. Haas, Hippocampal low-frequency stimulation prevents seizure generation in a mouse model of mesial temporal lobe epilepsy, Elife 9 (2020) e54518. https://doi.org/10.7554/eLife.54518

[9] A. Ammothumkandy, K. Ravina, V. Wolseley, A.N. Tartt, P.-N. Yu, L. Corona, N. Zhang, G. Nune, L. Kalayjian, J.J. Mann, G.B. Rosoklija, V. Arango, A.J. Dwork, B. Lee, J.A.D. Smith, D. Song, T.W. Berger, C. Heck, R.H. Chow, M. Boldrini, C.Y. Liu, J.J. Russin, M.A. Bonaguidi, Altered adult neurogenesis and gliogenesis in patients with mesial temporal lobe epilepsy, Nat. Neurosci. 25(4) (2022) 493–503. https://doi.org/10.1038/s41593-022-01044-2

[10] S.A. Ebrahim, J. Poshtan, S.M. Jamali, N.A. Ebrahim, Quantitative and qualitative analysis of time-series classification using deep learning, IEEE Access 8 (2020) 90202–90215. https://doi.org/10.1109/ACCESS.202.2993538

[11] J. Jumper, R. Evans, A. Pritzel, T. Green, M. Figurnov, O. Ronneberger, K. Tunyasuvunakool, R. Bates, A. Žídek, A. Potapenko, A. Bridgland, C. Meyer, S.A.A. Kohl, A.J. Ballard, A. Cowie, B. Romera-Paredes, S. Nikolov, R. Jain, J. Adler, T. Back, S. Petersen, D. Reiman, E. Clancy, M. Zielinski, M. Steinegger, M. Pacholska, T. Berghammer, S. Bodenstein, D. Silver, O. Vinyals, A.W. Senior, K. Kavukcuoglu, P. Kohli, D. Hassabis, Highly accurate protein structure prediction with alphafold, Nature 596(7873) (2021) 583–589. https://doi.org/10.1038/s41586-021-03819-2

[12] Y. LeCun, Y. Bengio, G. Hinton, Deep learning, Nature 521(7553) (2015) 436–444. https://doi.org/10.1038/nature14539

[13] S. Min, B. Lee, S. Yoon, Deep learning in bioinformatics, Brief. Bioinf. 18(5) (2017) 851–869. https://doi.org/10.1093/bib/bbw068

[14] W. Chen, Y. Wang, Y. Ren, H. Jiang, G. Du, J. Zhang, J. Li, An automated detection of epileptic seizures using CNN classifier based on feature fusion with high accuracy, BMC Med. Inform. Decis. Mak. 23(1) (2023) 96. https://doi.org/10.1186/s12911-023-02180-w

[15] G. Choi, C. Park, J. Kim, K. Cho, T.-J. Kim, H. Bae, K. Min, K.-Y. Jung, J. Chong, A novel multi-scale 3d CNN with deep neural network for epileptic seizure detection, in: 2019 IEEE International Conference on Consumer Electronics (ICCE), IEEE, 2019, pp. 1–2. https://doi.org/10.1109/ICCE.2019.8661969

[16] W. Hussain, M.S. Iqbal, J. Xiang, B. Wang, Y. Niu, Y. Gao, X. Wang, J. Sun, Q. Zhan, R. Cao, Z. Mengni, Epileptic seizure detection with permutation fuzzy entropy using robust machine learning techniques, IEEE Access 7 (2019) 182238–182258. https://doi.org/10.1109/ACCESS.2019.2956865

[17] C. Mahjoub, R. Le Bouquin Jeannès, T. Lajnef, A. Kachouri, Epileptic seizure detection on EEG signals using machine learning techniques and advanced preprocessing methods, Biom. Eng. Biomed. Tech. 65(1) (2020) 33–50. https://doi.org/10.1515/bmt-2019-0001

[18] A.H. Shoeb, Application of Machine Learning to Epileptic Seizure Onset Detection and Treatment, Ph.D. thesis, Massachusetts Institute of Technology, 2010.

[19] P. Durongbhan, Y. Zhao, L. Chen, P. Zis, M. De Marco, Z.C. Unwin, A. Venneri, X. He, S. Li, Y. Zhao, D.J. Blackburn, P.G. Sarrigiannis, A dementia classification framework using frequency and time-frequency features based on EEG signals, IEEE Trans. Neural Syst. Rehabil. Eng. 27(5) (2019) 826–835. https://doi.org/10.1109/TNSRE.2019.2909100

[20] A.K. Singh, S. Krishnan, Trends in EEG signal feature extraction applications, Front. Artif. Intell. 5 (2023) 1072801. https://doi.org/10.3389/frai.2022.1072801

[21] L. Guo, D. Rivero, J. Dorado, J.R. Rabuñal, A. Pazos, Automatic epileptic seizure detection in EEGs based on line length feature and artificial neural networks, J. Neurosci. Methods 191(1) (2010) 101–109. https://doi.org/10.1016/j.jneumeth.2010.05.020

[22] R.G. Andrzejak, K. Lehnertz, F. Mormann, C. Rieke, P. David, C.E. Elger, Indications of nonlinear deterministic and finite-dimensional structures in time series of brain electrical activity: dependence on recording region and brain state, Phys. Rev. E 64(6) (2001) 061907. https://doi.org/10.1103/PhysRevE.64.061907

[23] H. Wang, W. Shi, C.-S. Choy, Hardware design of real time epileptic seizure detection based on STFT and SVM, IEEE Access 6 (2018) 67277–67290. https://doi.org/10.1109/ACCESS.2018.2870883

[24] M. Mursalin, Y. Zhang, Y. Chen, N.V. Chawla, Automated epileptic seizure detection using improved correlation-based feature selection with random forest classifier, Neurocomputing 241 (2017) 204–214. https://doi.org/10.1016/j.neucom.2017.02.053

[25] U.R. Acharya, S.L. Oh, Y. Hagiwara, J.H. Tan, H. Adeli, Deep convolutional neural network for the automated detection and diagnosis of seizure using EEG signals, Comput. Biol. Med. 100 (2018) 270–278. https://doi.org/10.1016/j.compbiomed.2017.09.017

[26] S. Roy, I. Kiral-Kornek, S. Harrer, Deep learning enabled automatic abnormal EEG identification, in: 2018 40th Annual International Conference of the IEEE Engineering in Medicine and Biology Society (EMBC), IEEE, 2018, pp. 2756–2759. https://doi.org/10.1109/EMBC.2018.8512756

[27] I. Obeid, J. Picone, The temple university hospital EEG data corpus, Front. Neurosci. 10 (2016) 196. https://doi.org/10.3389/fnins.2016.00196

[28] K.-O. Cho, H.-J. Jang, Comparison of different input modalities and network structures for deep learning-based seizure detection, Sci. Rep. 10(1) (2020) 122. https://doi.org/10.1038/s41598-019-56958-y

[29] W.O. Tatum, Mesial temporal lobe epilepsy, J. Clin. Neurophys. 29(5) (2012) 356–365. https://doi.org/10.1097/WNP.0b013e31826b3ab7

[30] V. Duveau, C. Roucard, A mesiotemporal lobe epilepsy mouse model, Neurochem. Res. 42(7) (2017) 1919–1925. https://doi.org/10.1007/s11064-017-2239-3

[31] G. Paxinos, K.B.J. Franklin, Paxinos and Franklin's the Mouse Brain in Stereotaxic Coordinates, Academic press, 2019.

[32] A. Mesaros, T. Heittola, T. Virtanen, Metrics for polyphonic sound event detection, Appl. Sci. 6(6) (2016) 162. https://doi.org/10.3390/app6060162

[33] M. Perslev, M. Jensen, S. Darkner, P.J. Jennum, C. Igel, U-Time: a fully convolutional network for time series segmentation applied to sleep staging, in: Advances in Neural Information Processing Systems, volume 32, 2019.

[34] O. Ronneberger, P. Fischer, T. Brox, U-Net: convolutional networks for biomedical image segmentation, in: Medical Image Computing and Computer-Assisted Intervention – MICCAI 2015, Springer, 2015, pp. 234–241. https://doi.org/10.1007/978-3-319-24574-4_28

[35] H. Sak, A. Senior, F. Beaufays, Long short-term memory based recurrent neural network architectures for large vocabulary speech recognition, 2014, arXiv:1402.1128.

[36] K. Cho, B. van Merriënboer, Ç. Gülcühre, D. Bahdanau, F. Bougares, H. Schwenk, Y. Bengio, Learning phrase representations using RNN encoder-decoder for statistical machine translation, in: Proceedings of the 2014 Conference on Empirical Methods in Natural Language Processing (EMNLP), Association for Computational Linguistics, 2014, pp. 1724–1734. https://doi.org/10.3115/v1/D14-1179

[37] A. Vaswani, N. Shazeer, N. Parmar, J. Uszkoreit, L. Jones, A.N. Gomez, Ł. Kaiser, I. Polosukhin, Attention is all you need, in: Advances in Neural Information Processing Systems, volume 30, 2017.

[38] E. Eldele, Z. Chen, C. Liu, M. Wu, C.-K. Kwoh, X. Li, C. Guan, An attention-based deep learning approach for sleep stage classification with single-channel EEG, IEEE Trans. Neural Syst. Rehabil. Eng. 29 (2021) 809–818. https://doi.org/10.1109/TNSRE.2021.3076234

[39] J. Su, Y. Lu, S. Pan, A. Murtadha, B. Wen, Y. Liu, Roformer: enhanced transformer with rotary position embedding, 2023, arXiv:2104.09864.

[40] G. Jandó, R.M. Siegel, Z. Horváth, G. Buzsáki, Pattern recognition of the electroencephalogram by artificial neural networks, Electroencephalogr Clin. Neurophysiol. 86(2) (1993) 100–109. https://doi.org/10.1016/0013-4694(93)90082-7

[41] A.V. Medvedev, B. Lehmann, The detection of absence seizures using cross-frequency coupling analysis with a deep learning network, 2024, Research Square preprint. https://doi.org/10.21203/rs.3.rs-4178484/v1

[42] C.A. Ellis, R.L. Miller, V.D. Calhoun, Evaluating augmentation approaches for deep learning-based major depressive disorder diagnosis with raw electroencephalogram data, bioRxiv (2023). (preprint). https://doi.org/10.1101/2023.12.15.571938

[43] N.F. Ince, F. Goksu, G. Pellizzer, A. Tewfik, M. Stephane, Selection of spectro-temporal patterns in multichannel MEG with support vector machines for schizophrenia classification, in: 2008 30th Annual International Conference of the IEEE Engineering in Medicine and Biology Society, IEEE, 2008, pp. 3554–3557. https://doi.org/10.1109/IEMBS.2008.4649973

[44] Y.-H. Kwon, S.-B. Shin, S.-D. Kim, Electroencephalography based fusion two-dimensional (2d)-convolution neural networks (CNN) model for emotion recognition system, Sensors 18(5) (2018) 1383. https://doi.org/10.3390/s18051383

[45] G. Ruffini, D. Ibáñez, M. Castellano, L. Dubreuil-Vall, A. Soria-Frisch, R. Postuma, J.-F. Gagnon, J. Montplaisir, Deep learning with EEG spectrograms in rapid eye movement behavior disorder, Front. Neurol. 10 (2019) 806. https://doi.org/10.3389/fneur.2019.00806

[46] S.L. Oh, J. Vicnesh, E.J. Ciaccio, R. Yuvaraj, U.R. Acharya, Deep convolutional neural network model for automated diagnosis of schizophrenia using EEG signals, Appl. Sci. 9(14) (2019) 2870. https://doi.org/10.3390/app9142870

[47] A. Shoeibi, D. Sadeghi, P. Moridian, N. Ghassemi, J.A. Heras, R. Alizadehsani, A. Khadem, Y. Kong, S. Nahavandi, Y.-D. Zhang, J.M. Gorriz, Automatic diagnosis of schizophrenia in EEG signals using CNN-LSTM models, Front. Neuroinform. 15 (2021) 777977. https://doi.org/10.3389/fninf.2021.777977

[48] G. Brookshire, J. Kasper, N.M. Blauch, Y.C. Wu, R. Glatt, D.A. Merrill, S. Gerrol, K.J. Yoder, C. Quirk, C. Lucero, Data leakage in deep learning studies of translational EEG, Front. Neurosci. 18 (2024) 1373515. https://doi.org/10.3389/fnins.2024.1373515

[49] K. Rasheed, A. Qayyum, J. Qadir, S. Sivathamboo, P. Kwan, L. Kuhlmann, T. O'Brien, A. Razi, Machine learning for predicting epileptic seizures using EEG signals: a review, IEEE Rev. Biomed. Eng. 14 (2021) 139–155. https://doi.org/10.1109/RBME.2020.3008792

[50] J. Koren, S. Hafner, M. Feigl, C. Baumgartner, Systematic analysis and comparison of commercial seizure-detection software, Epilepsia 62(2) (2021) 426–438. https://doi.org/10.1111/epi.16812

[51] G.M. Besné, A. Horrillo-Maysonnial, M.J. Nicolás, F. Capell-Pascual, E. Urrestarazu, J. Artieda, M. Valencia, An interactive framework for the detection of ictal and interictal activities: cross-species and stand-alone implementation, Comput. Methods Programs Biomed. 218 (2022) 106728. https://doi.org/10.1016/j.cmpb.2022.106728

[52] I. Sturm, S. Lapuschkin, W. Samek, K.-R. Müller, Interpretable deep neural networks for single-trial EEG classification, J. Neurosci. Methods 274 (2016) 141–145. https://doi.org/10.1016/j.jneumeth.2016.10.008