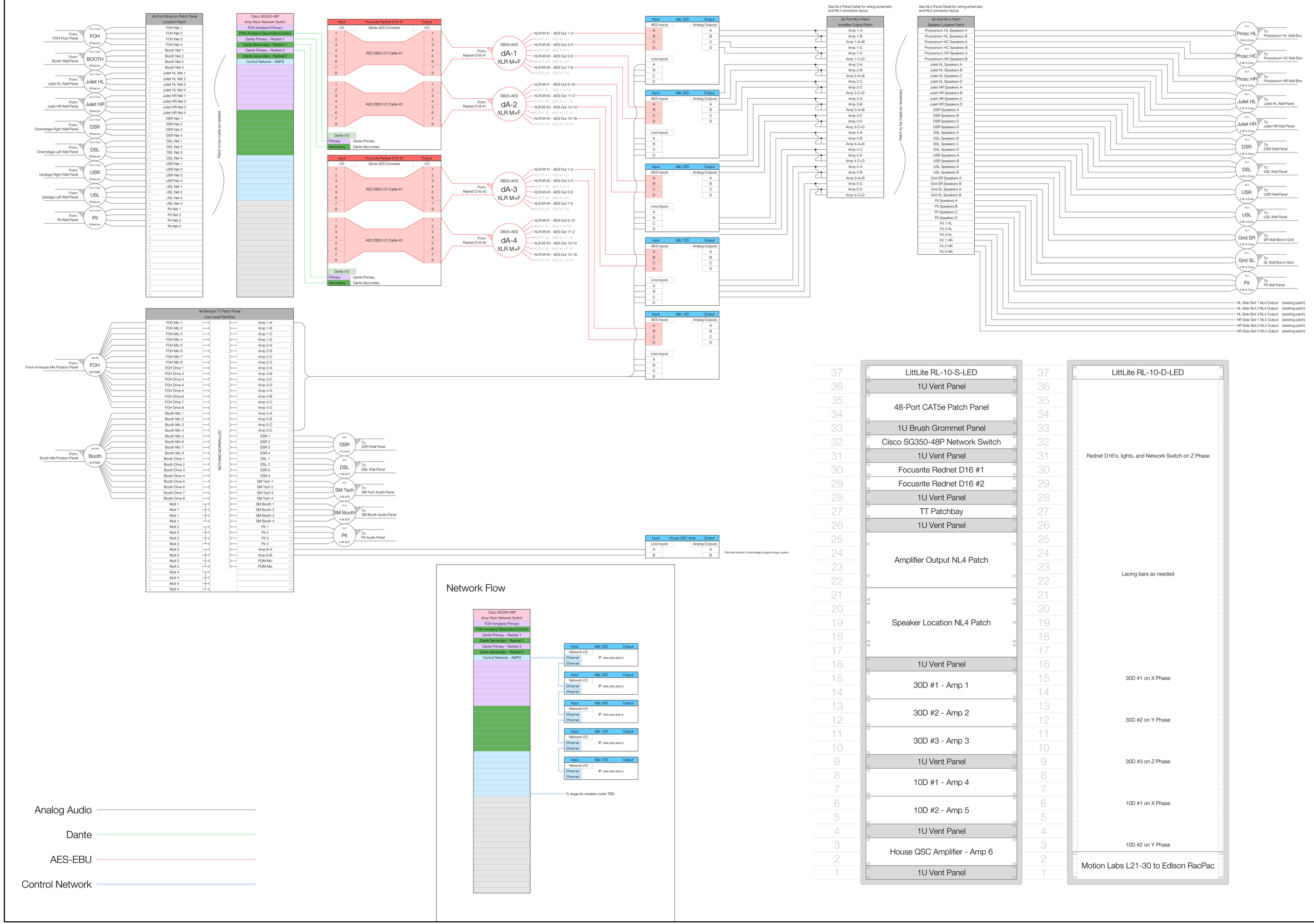

Ben Truppin-Brown
Sound Design for Theatre & Live Performance
Sound System & Acoustical Design Consultant
4429 Jinx Avenue Austin TX 78745
ben.truppinbrown@gmail.com
(617) 816-2494

S.N. 10763
SOUND DESIGNER

Architect.....Haddon-Cowan
Elec. Engineer.....EEA Consulting Engineers
Mech. Engineer.....EEA Consulting Engineers
Project Manager.....Karen Lacey

Revisions

no	date	description
1	6/13	Patchbay & label updates

University of Texas at Austin
F.L. Winship Drama Building
Payne Theater Upgrades
CP 738669
Audio System Specifications

Drawings are conceptual in nature.

All structural suggestions conveyed must be verified by a qualified engineer.

All electrical suggestions must be verified by a qualified engineer.

Amp Rack

13 June 2019
Scale: NTS

Drawn by BTB
Design by BTB

16 / 19

A-RK1

RF Rack

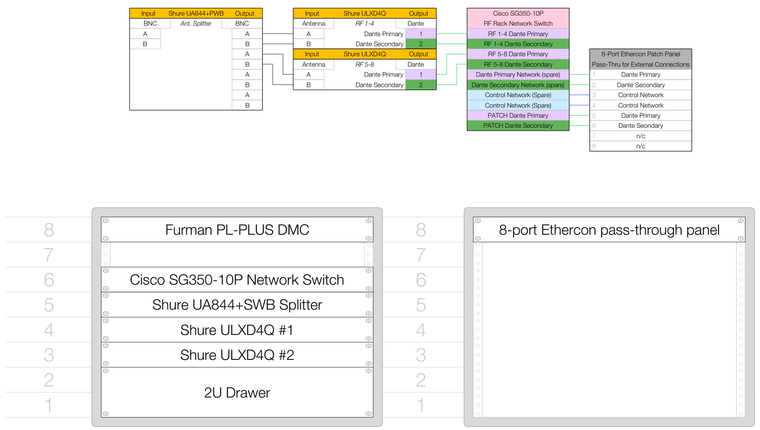

IEM Rack

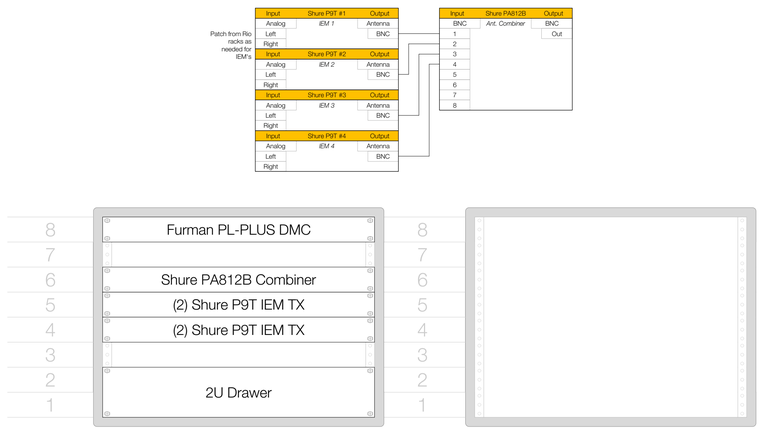

Rio Racks - 3 Total

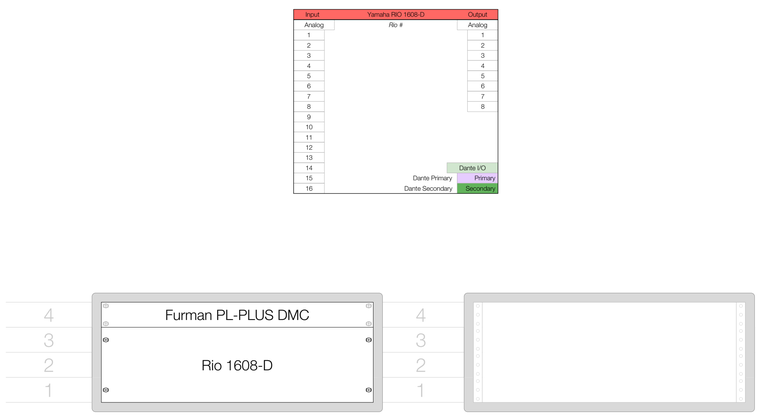

Analog Audio

Dante

AES-EBU

Control Network

Front-of-House Rack

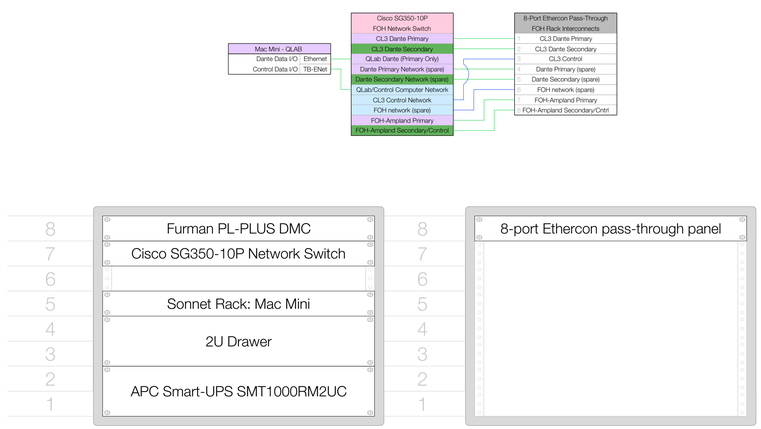

Ben Truppin-Brown
Sound Design for Theatre & Live Performance
Sound System & Acoustical Design Consultant
4429 Jinx Avenue Austin TX 78745
ben.truppinbrown@gmail.com
(617) 816-2494

S.N. 107K8
SOUND DESIGNER

Architect.....Haddon-Cowan
Elec. Engineer.....EEA Consulting Engineers
Mech. Engineer.....EEA Consulting Engineers
Project Manager.....Karen Lacey

Revisions

no	date	description
1	6/13	Patchbay & label updates

University of Texas at Austin
F.L. Winship Drama Building
Payne Theater Upgrades
CP 738669
Audio System Specifications

Drawings are conceptual in nature.

All structural suggestions conveyed must be verified by a qualified engineer.

All electrical suggestions must be verified by a qualified engineer.

Additional Racks

13 June 2019
Scale: NTS

Drawn by BTB
Design by BTB