DUT CONNECTION

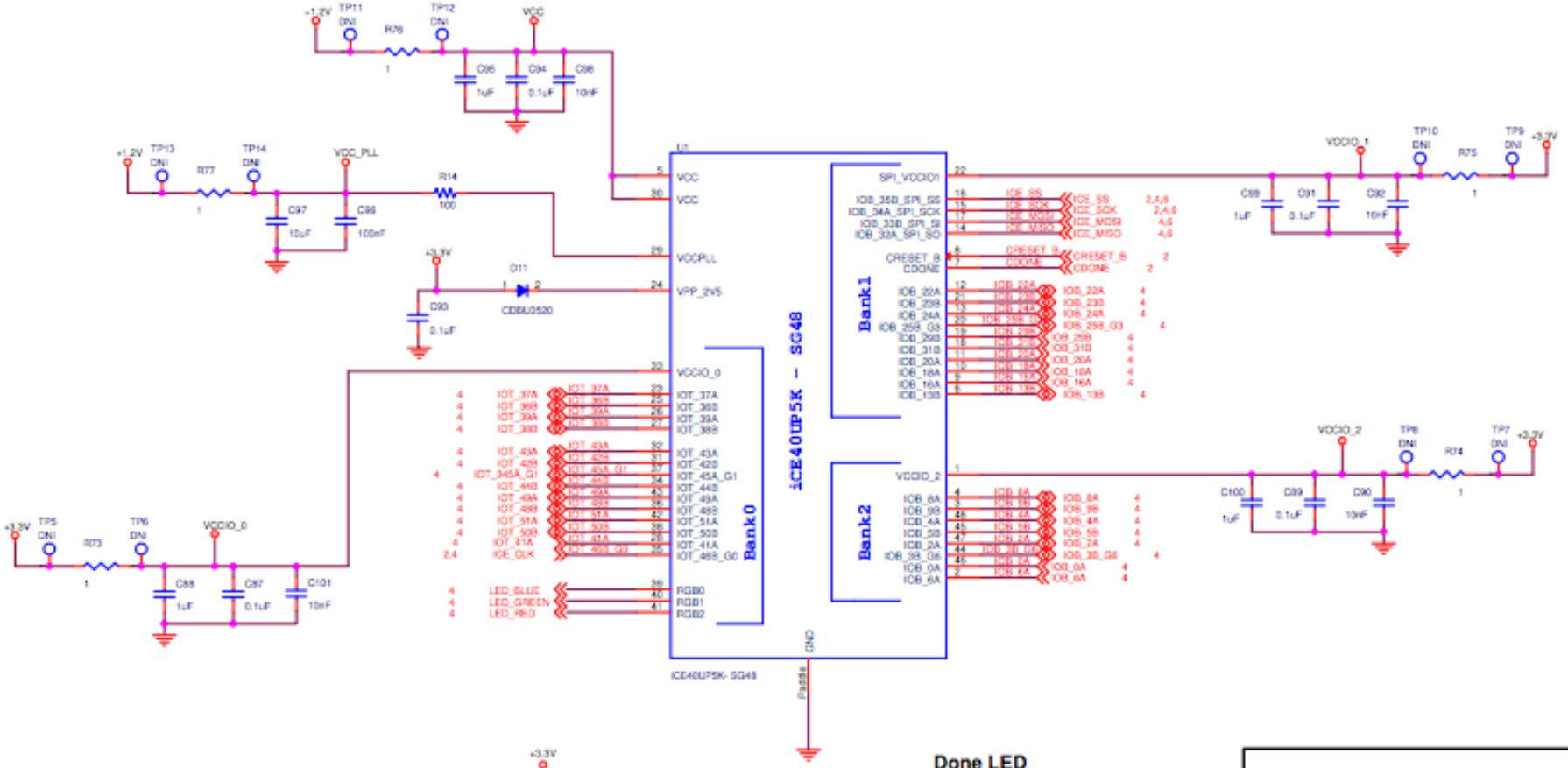

CRESETB Button

PART_NUMBER = TL1015AF160QG
Manufacturer = E-Switch

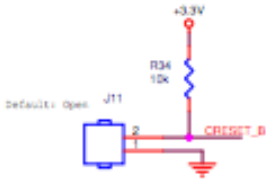

CRST
PART_NUMBER = 77311-801-02LF
Manufacturer = FCI

Done LED

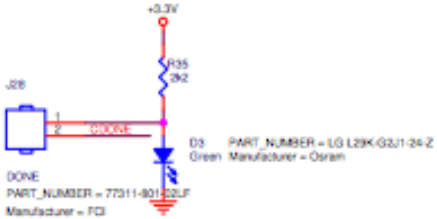

D3 Green PART_NUMBER = LG L29K-G2J1-24-Z Manufacturer = Osram

DONE
PART_NUMBER = 77311-801-02LF
Manufacturer = FCI

LATTICE SEMICONDUCTOR

Lattice Semiconductor Applications
Email: techsupport@Latticesemi.com

Title: DUT Connection

Size	Project	Schematic Rev
B	iCE40 UltraPlus Breakout Board	A
		Board Rev A
Date: 8-DEC-2015	Sheet 3 of 8	