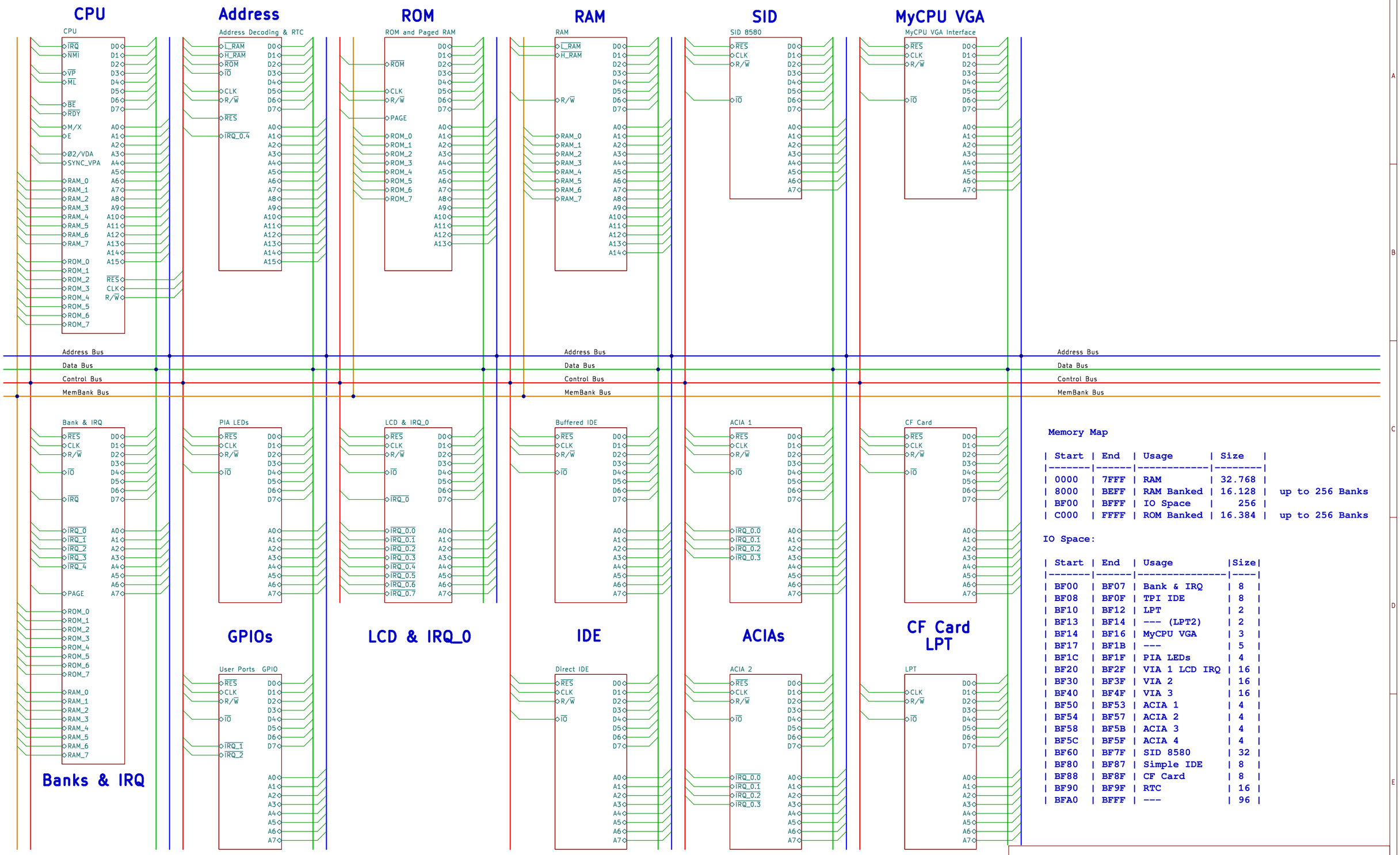

Memory Map

Start	End	Usage	Size	
0000	7FFF	RAM	32.768	
8000	BEFF	RAM Banked	16.128	up to 256 Banks
BF00	BFFF	IO Space	256	
C000	FFFF	ROM Banked	16.384	up to 256 Banks

IO Space:

Start	End	Usage	Size
BF00	BF07	Bank & IRQ	8
BF08	BF0F	TPI IDE	8
BF10	BF12	LPT	2
BF13	BF14	--- (LPT2)	2
BF14	BF16	MyCPU VGA	3
BF17	BF1B	---	5
BF1C	BF1F	PIA LEDs	4
BF20	BF2F	VIA 1 LCD IRQ	16
BF30	BF3F	VIA 2	16
BF40	BF4F	VIA 3	16
BF50	BF53	ACIA 1	4
BF54	BF57	ACIA 2	4
BF58	BF5B	ACIA 3	4
BF5C	BF5F	ACIA 4	4
BF60	BF7F	SID 8580	32
BF80	BF87	Simple IDE	8
BF88	BF8F	CF Card	8
BF90	BF9F	RTC	16
BFA0	BFFF	---	96

System Overview

Synthron

Sheet: /

File: overview.kicad_sch

Title: S65xx Computer System Overview

Size: A3	Date: 2024-06-30	Rev: 1.1
KiCad E.D.A. 8.0.3		Id: 1/17

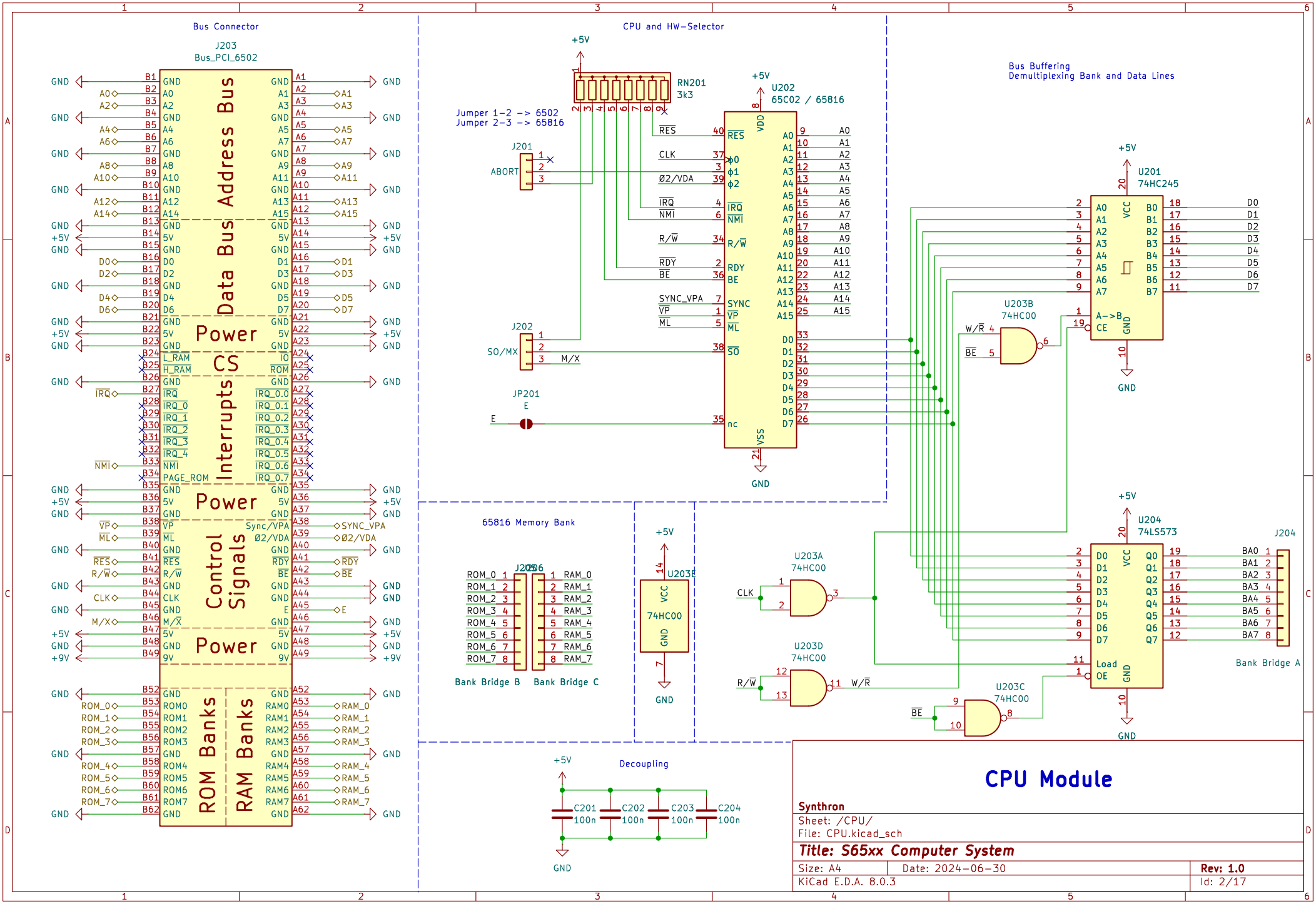
Bus Connector
J203
Bus_PCI_6502
Address Bus
Data Bus
Power
CS
Interrupts
Control Signals
ROM Banks
RAM Banks
CPU and HW-Selector
RN201
3k3
Jumper 1-2 -> 6502
Jumper 2-3 -> 65816
J201
ABORT
J202
SO/MX
JP201
U202
65C02 / 65816
Bus Buffering
Demultiplexing Bank and Data Lines
U201
74HC245
U203B
74HC00
U204
74LS573
J204
Bank Bridge A
65816 Memory Bank
Bank Bridge B
Bank Bridge C
U203A
74HC00
U203D
74HC00
U203C
74HC00
U203E
74HC00
Decoupling
C201
100n
C202
100n
C203
100n
C204
100n
CPU Module
Synthron
Sheet: /CPU/
File: CPU.kicad_sch
Title: S65xx Computer System
Size: A4
Date: 2024-06-30
Rev: 1.0
KiCad E.D.A. 8.0.3
Id: 2/17

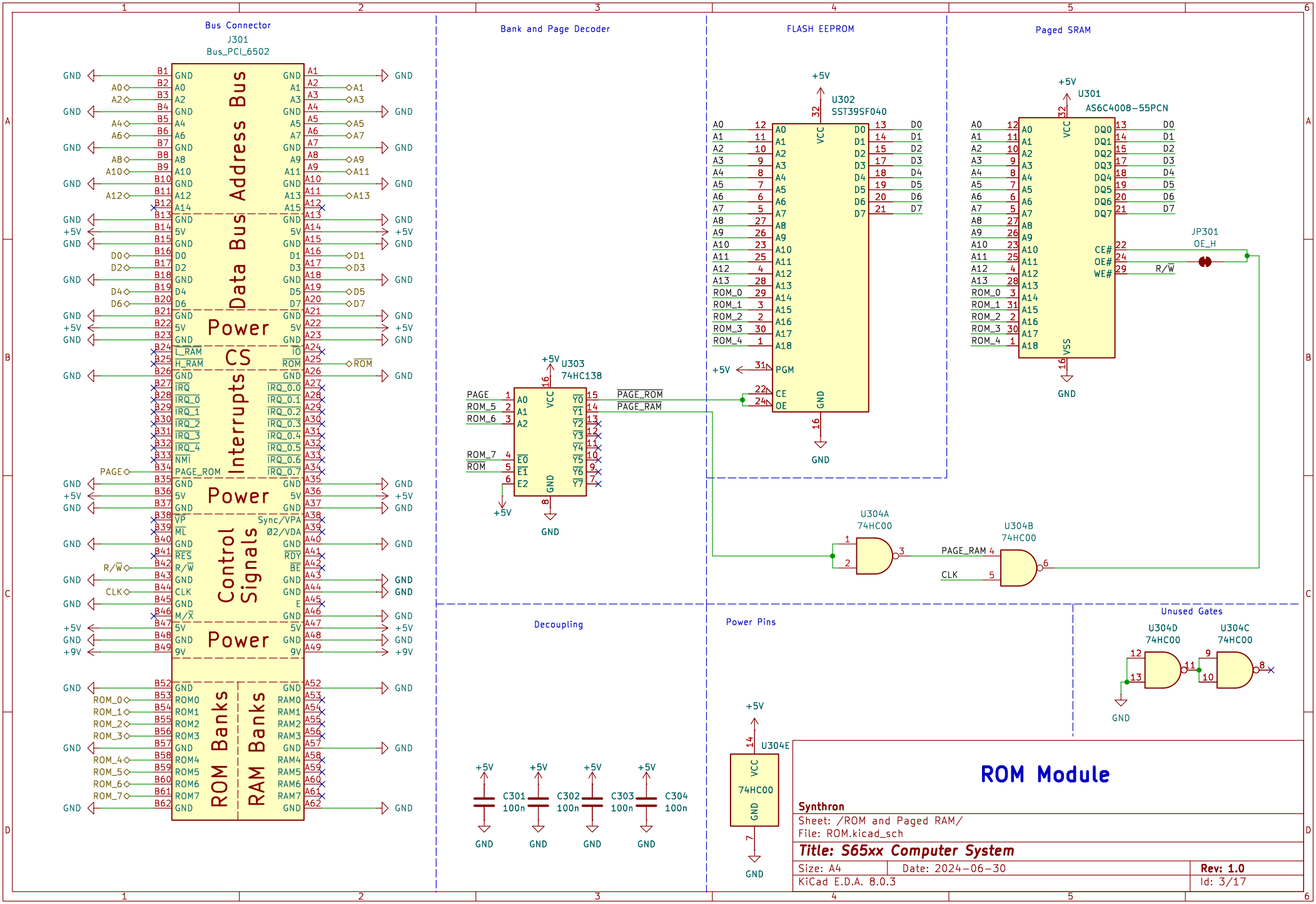
Bus Connector
J301
Bus_PCI_6502
Address Bus
Data Bus
Power
CS
Interrupts
Power
Control Signals
Power
ROM Banks
RAM Banks
Bank and Page Decoder
U303
74HC138
FLASH EEPROM
U302
SST39SF040
Paged SRAM
U301
AS6C4008-55PCN
JP301
OE_H
U304A
74HC00
U304B
74HC00
Decoupling
C301
100n
C302
100n
C303
100n
C304
100n
Power Pins
U304E
74HC00
Unused Gates
U304D
74HC00
U304C
74HC00
ROM Module
Synthron
Sheet: /ROM and Paged RAM/
File: ROM.kicad_sch
Title: S65xx Computer System
Size: A4
Date: 2024-06-30
Rev: 1.0
KiCad E.D.A. 8.0.3
Id: 3/17

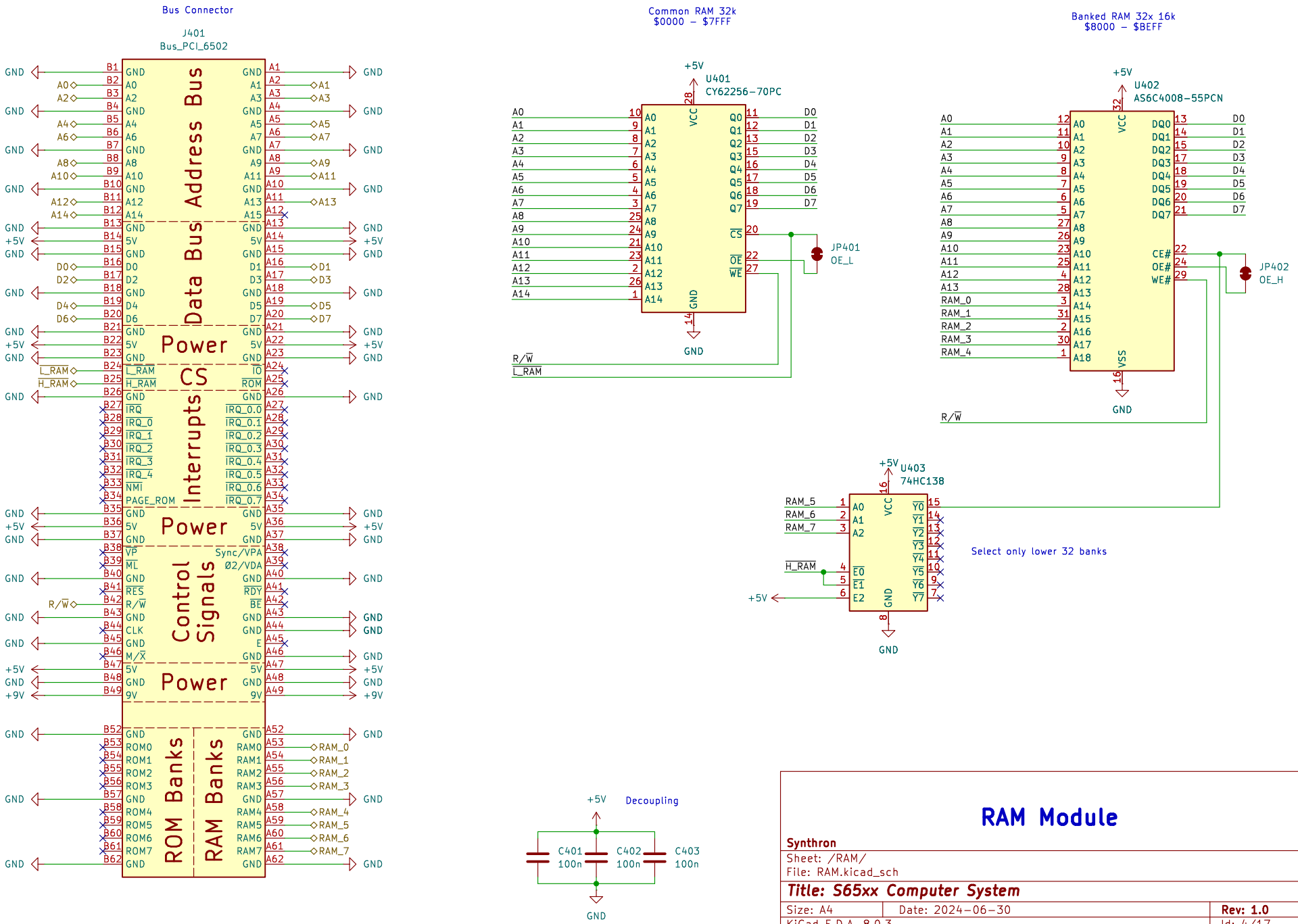

RAM Module

Synthron

Sheet: /RAM/

File: RAM.kicad_sch

Title: S65xx Computer System

Size: A4	Date: 2024-06-30	Rev: 1.0
KiCad E.D.A. 8.0.3		Id: 4/17

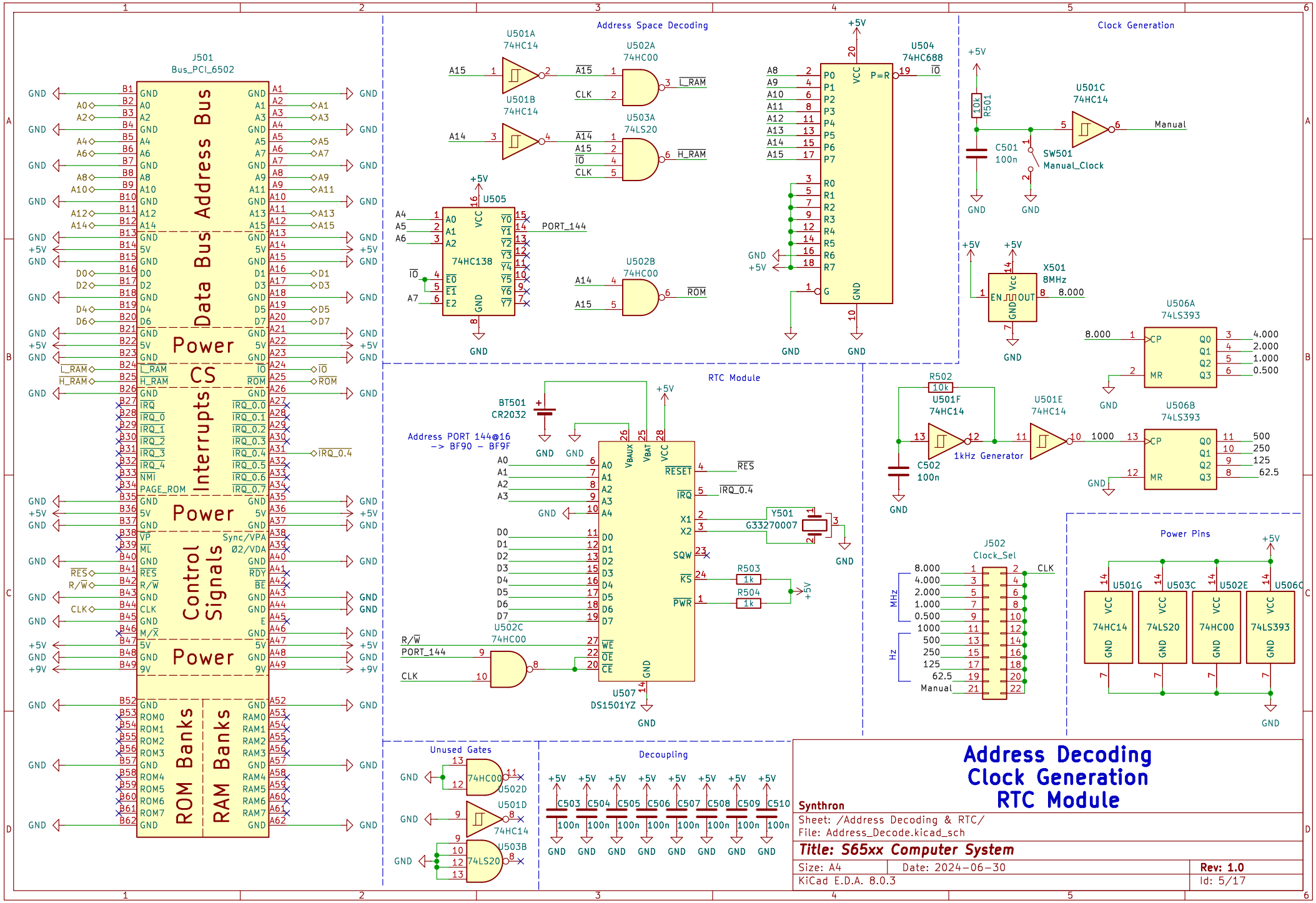
J501
Bus_PCI_6502
Address Bus
Data Bus
Power
CS
Interrupts
Power
Control Signals
Power
ROM Banks
RAM Banks
Address Space Decoding
U501A
74HC14
U501B
74HC14
U502A
74HC00
U503A
74LS20
U502B
74HC00
U505
74HC138
PORT_144
U504
74HC688
Clock Generation
U501C
74HC14
Manual
SW501
Manual_Clock
C501
100n
R501
10k
X501
8MHz
8.000
U506A
74LS393
U506B
74LS393
R502
10k
U501F
74HC14
U501E
74HC14
1kHz Generator
C502
100n
RTC Module
BT501
CR2032
Address PORT 144@16
-> BF90 - BF9F
U507
DS1501YZ
Y501
G33270007
R503
1k
R504
1k
U502C
74HC00
J502
Clock_Sel
Power Pins
U501G
74HC14
U503C
74LS20
U502E
74HC00
U506C
74LS393
Unused Gates
U502D
74HC00
U501D
74HC14
U503B
74LS20
Decoupling
C503
C504
C505
C506
C507
C508
C509
C510
100n
Synthron
Address Decoding
Clock Generation
RTC Module
Sheet: /Address Decoding & RTC/
File: Address_Decode.kicad_sch
Title: S65xx Computer System
Size: A4
Date: 2024-06-30
Rev: 1.0
KiCad E.D.A. 8.0.3
Id: 5/17

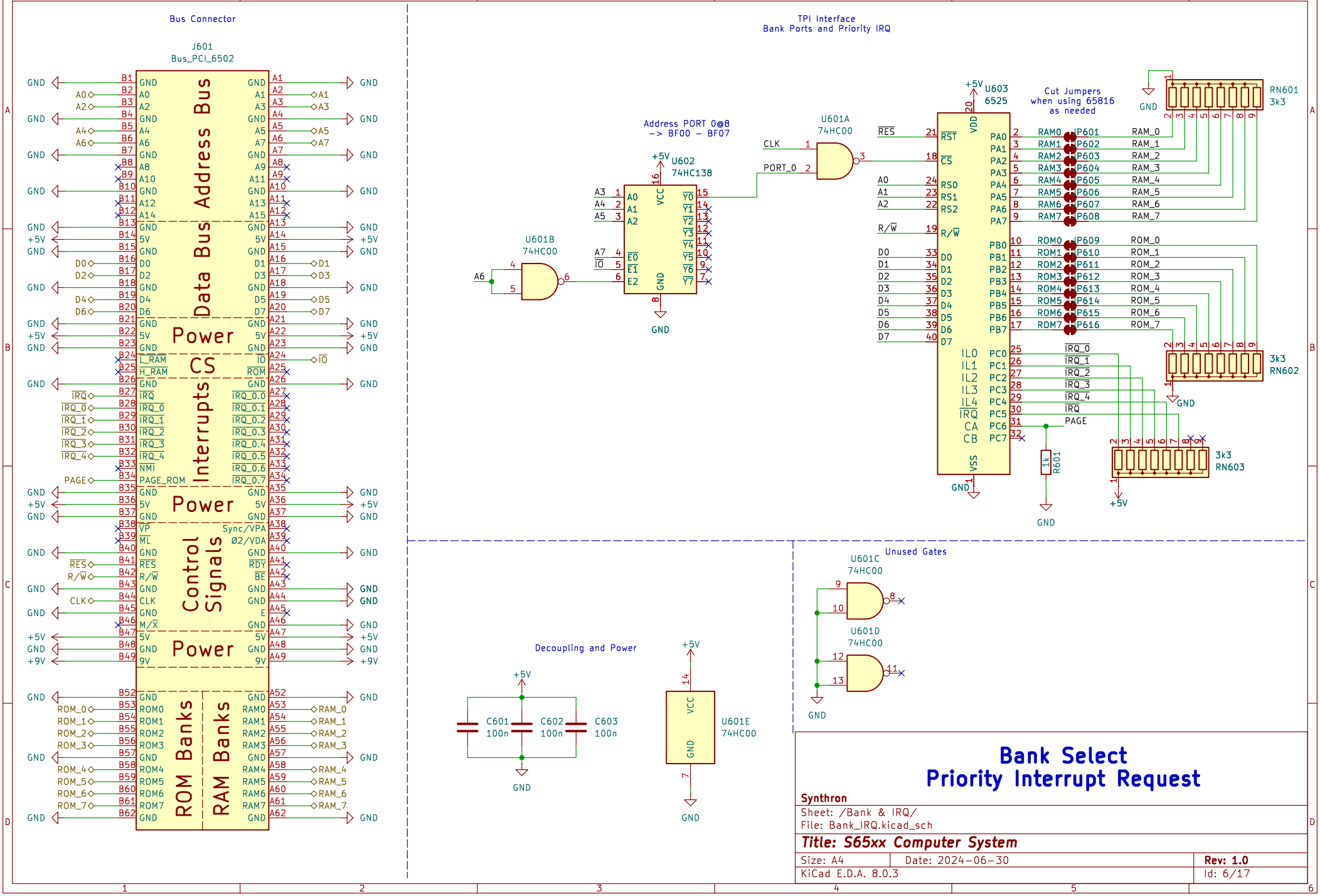
Bus Connector
J601
Bus_PCI_6502
Address Bus
Data Bus
Power
CS
Interrupts
Power
Control Signals
Power
ROM Banks
RAM Banks
TPI Interface
Bank Ports and Priority IRQ
Address PORT 0@8
-> BF00 - BF07
U601A
74HC00
U601B
74HC00
U602
74HC138
U603
6525
Cut Jumpers
when using 65816
as needed
RN601
3k3
3k3
RN602
3k3
RN603
1k
R601
Decoupling and Power
C601
100n
C602
100n
C603
100n
U601E
74HC00
Unused Gates
U601C
74HC00
U601D
74HC00
Bank Select
Priority Interrupt Request
Synthron
Sheet: /Bank & IRQ/
File: Bank_IRQ.kicad_sch
Title: S65xx Computer System
Size: A4
Date: 2024-06-30
Rev: 1.0
KiCad E.D.A. 8.0.3
Id: 6/17

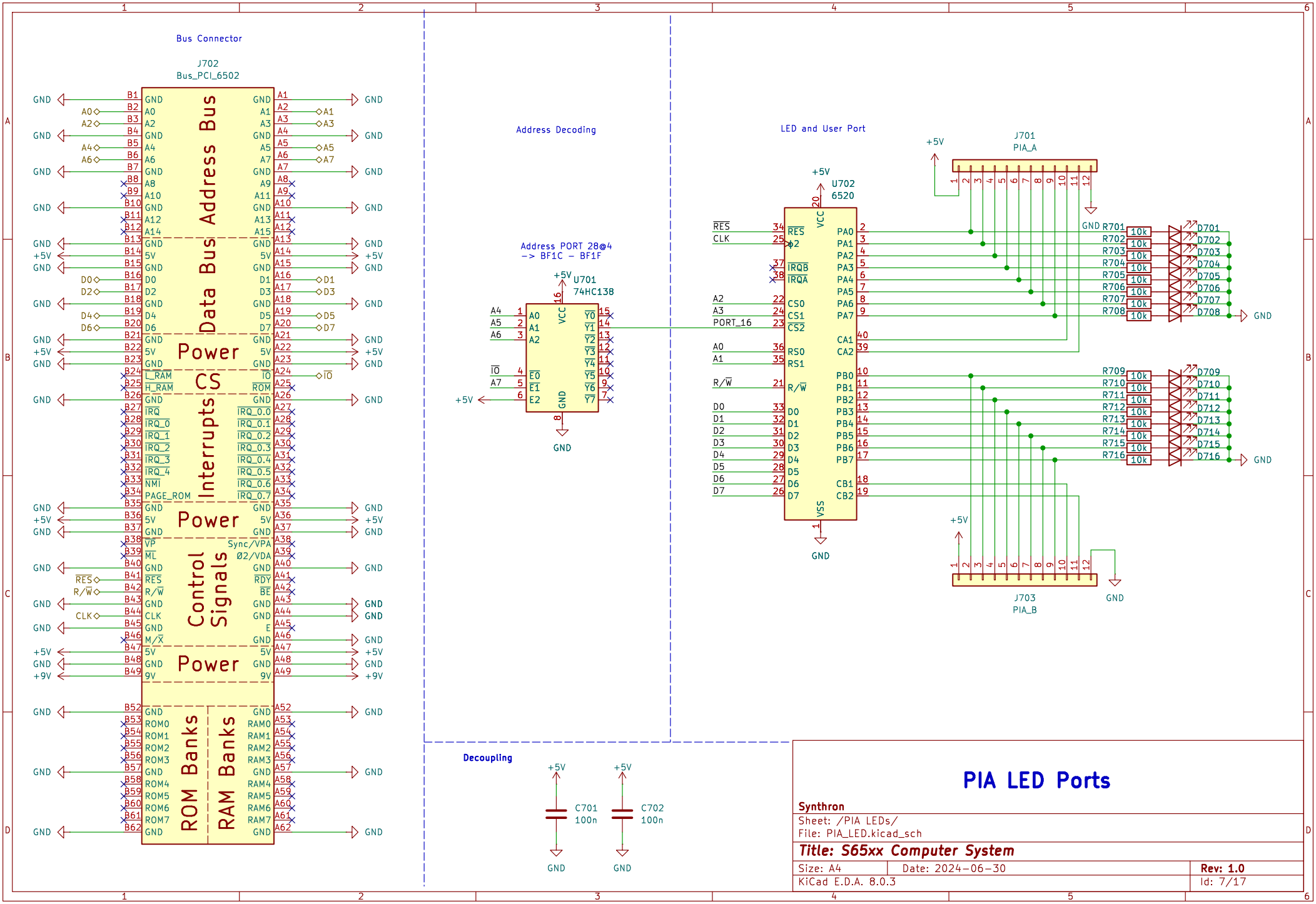
Bus Connector
J702
Bus_PCI_6502
Address Bus
Data Bus
Power
CS
Interrupts
Power
Control Signals
Power
ROM Banks
RAM Banks
Address Decoding
Address PORT 28@4
-> BF1C - BF1F
U701
74HC138
LED and User Port
U702
6520
J701
PIA_A
J703
PIA_B
Decoupling
C701
100n
C702
100n
PIA LED Ports
Synthron
Sheet: /PIA LEDs/
File: PIA_LED.kicad_sch
Title: S65xx Computer System
Size: A4
Date: 2024-06-30
Rev: 1.0
KiCad E.D.A. 8.0.3
Id: 7/17

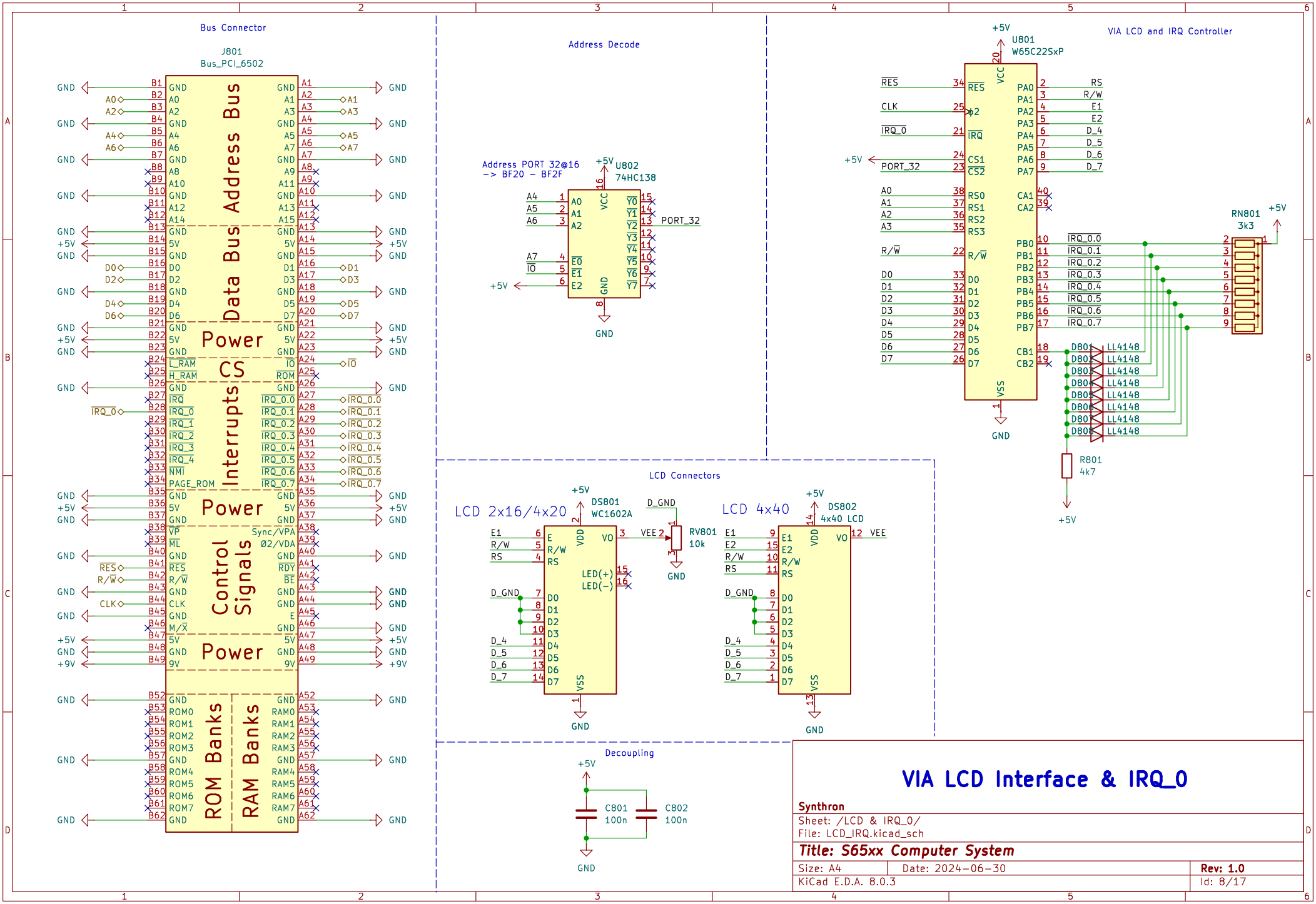
Bus Connector
J801
Bus_PCI_6502
Address Bus
Data Bus
Power
CS
Interrupts
Control Signals
ROM Banks
RAM Banks
Address Decode
Address PORT 32@16
-> BF20 - BF2F
U802
74HC138
PORT_32
VIA LCD and IRQ Controller
U801
W65C22SxP
RN801
3k3
R801
4k7
LCD Connectors
LCD 2x16/4x20
DS801
WC1602A
RV801
10k
LCD 4x40
DS802
4x40 LCD
Decoupling
C801
100n
C802
100n
VIA LCD Interface & IRQ_0
Synthron
Sheet: /LCD & IRQ_0/
File: LCD_IRQ.kicad_sch
Title: S65xx Computer System
Size: A4
Date: 2024-06-30
Rev: 1.0
KiCad E.D.A. 8.0.3
Id: 8/17

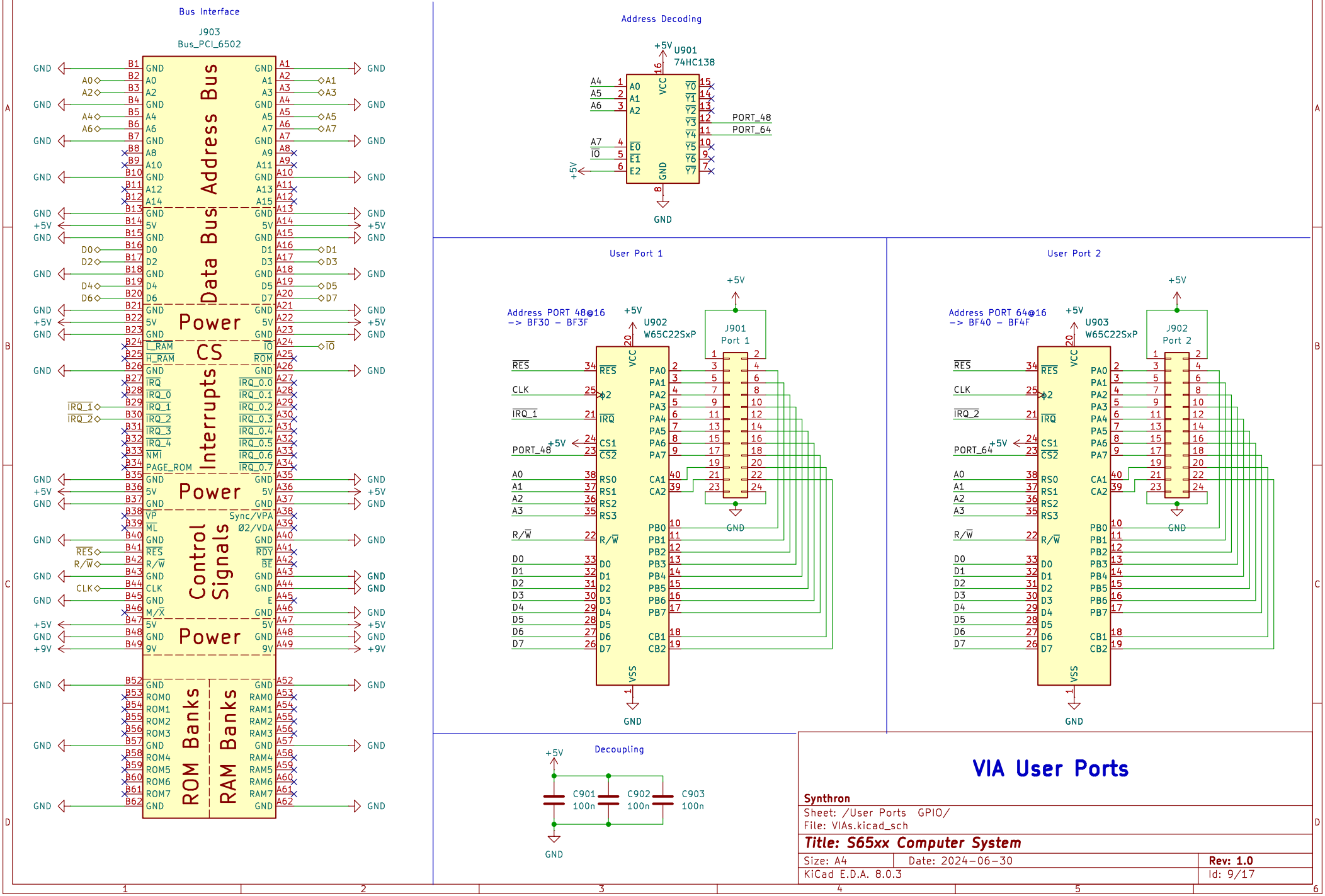
Bus Interface
J903
Bus_PCI_6502
Address Bus
Data Bus
Power
CS
Interrupts
Power
Control Signals
Power
ROM Banks
RAM Banks
Address Decoding
U901
74HC138
PORT_48
PORT_64
User Port 1
Address PORT 48@16
-> BF30 - BF3F
U902
W65C22SxP
J901
Port 1
User Port 2
Address PORT 64@16
-> BF40 - BF4F
U903
W65C22SxP
J902
Port 2
Decoupling
C901
100n
C902
100n
C903
100n
VIA User Ports
Synthron
Sheet: /User Ports GPIO/
File: VIAs.kicad_sch
Title: S65xx Computer System
Size: A4
Date: 2024-06-30
Rev: 1.0
KiCad E.D.A. 8.0.3
Id: 9/17

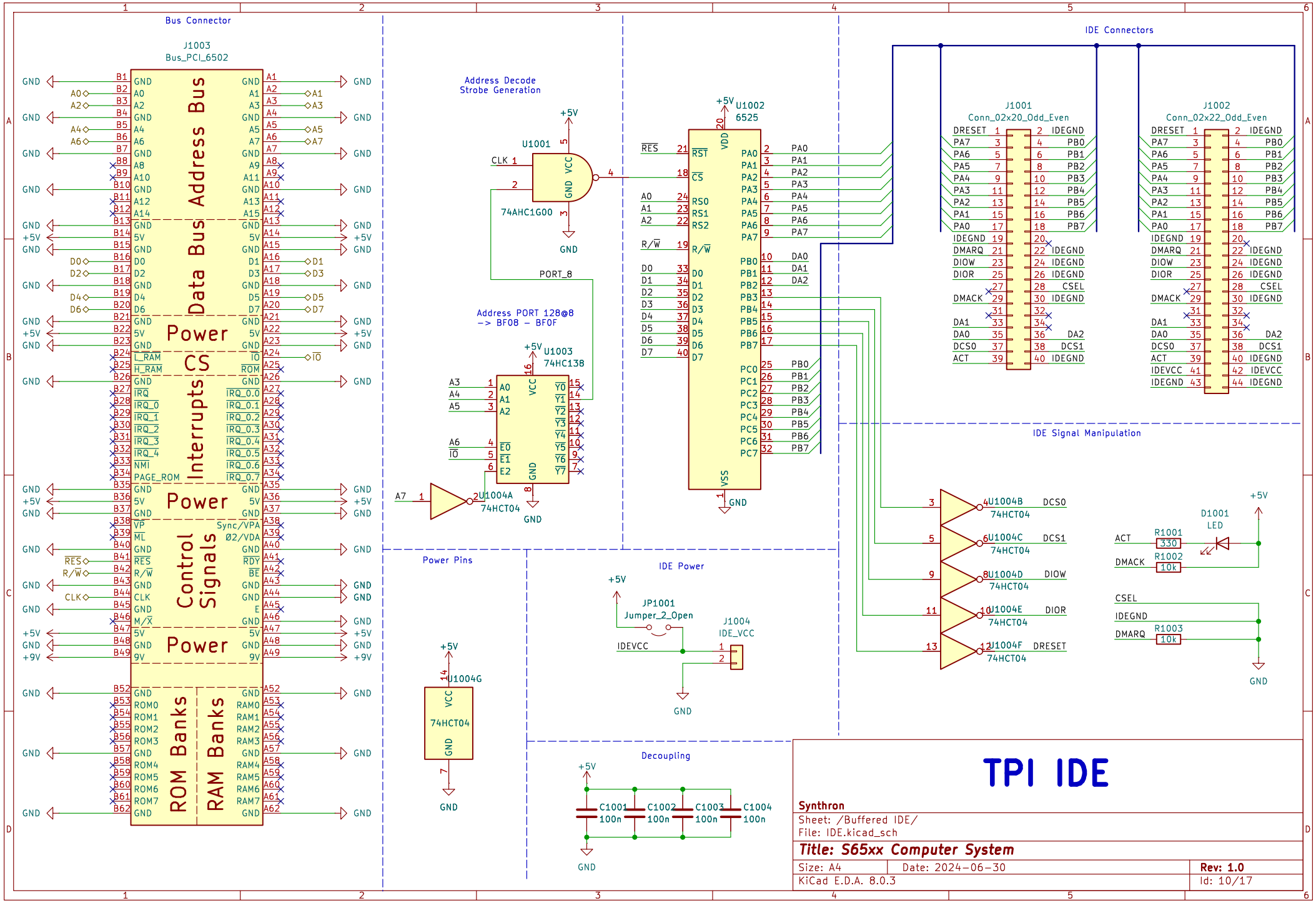
Bus Connector
J1003
Bus_PCI_6502
Address Bus
Data Bus
Power
CS
Interrupts
Power
Control Signals
Power
ROM Banks
RAM Banks
Address Decode
Strobe Generation
U1001
74AHC1G00
Address PORT 128@8
-> BF08 - BF0F
U1003
74HC138
U1004A
74HCT04
U1002
6525
IDE Connectors
J1001
Conn_02x20_Odd_Even
J1002
Conn_02x22_Odd_Even
IDE Signal Manipulation
U1004B
U1004C
U1004D
U1004E
U1004F
74HCT04
D1001
LED
R1001
330
R1002
10k
R1003
10k
Power Pins
U1004G
74HCT04
IDE Power
JP1001
Jumper_2_Open
J1004
IDE_VCC
Decoupling
C1001
C1002
C1003
C1004
100n
TPI IDE
Synthron
Sheet: /Buffered IDE/
File: IDE.kicad_sch
Title: S65xx Computer System
Size: A4
Date: 2024-06-30
Rev: 1.0
KiCad E.D.A. 8.0.3
Id: 10/17

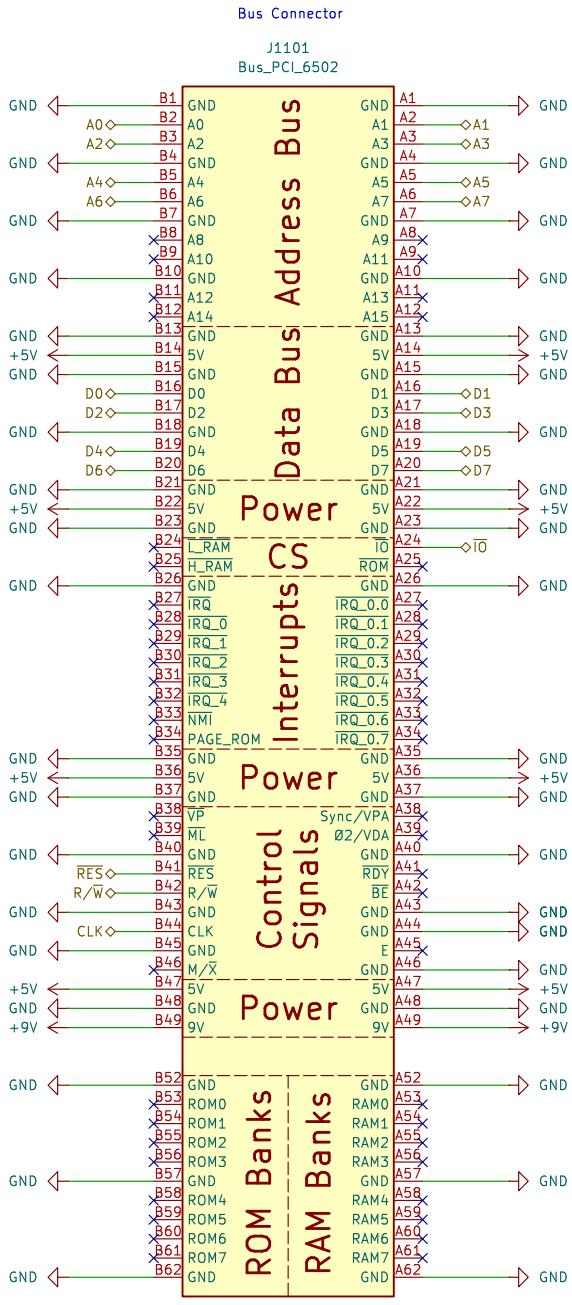

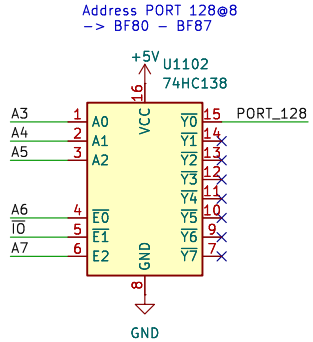

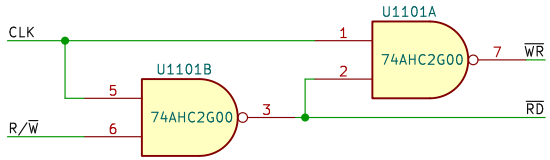

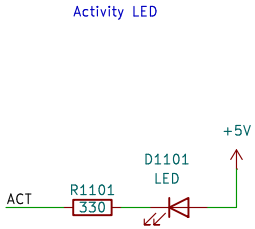

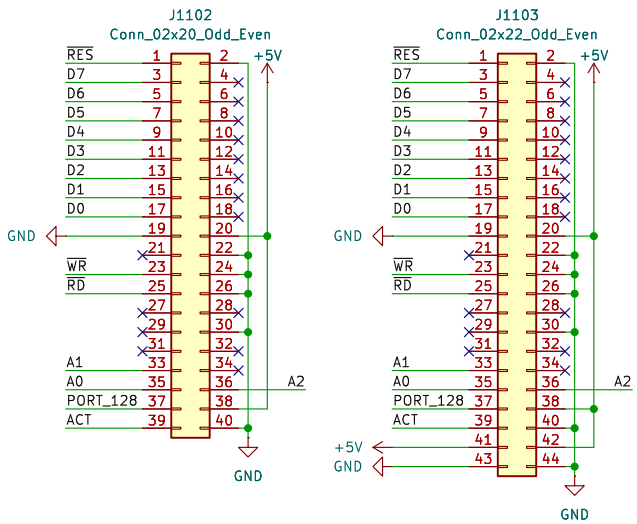

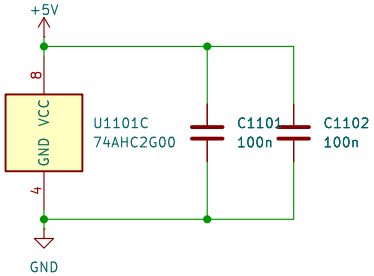

Simple IDE Bus Interface

Synthron

Sheet: /Direct IDE/
File: IDE-Simple.kicad_sch

Title: S65xx Computer System

Size: A4	Date: 2024-06-30	**Rev: 1.0**
KiCad E.D.A. 8.0.3		Id: 11/17

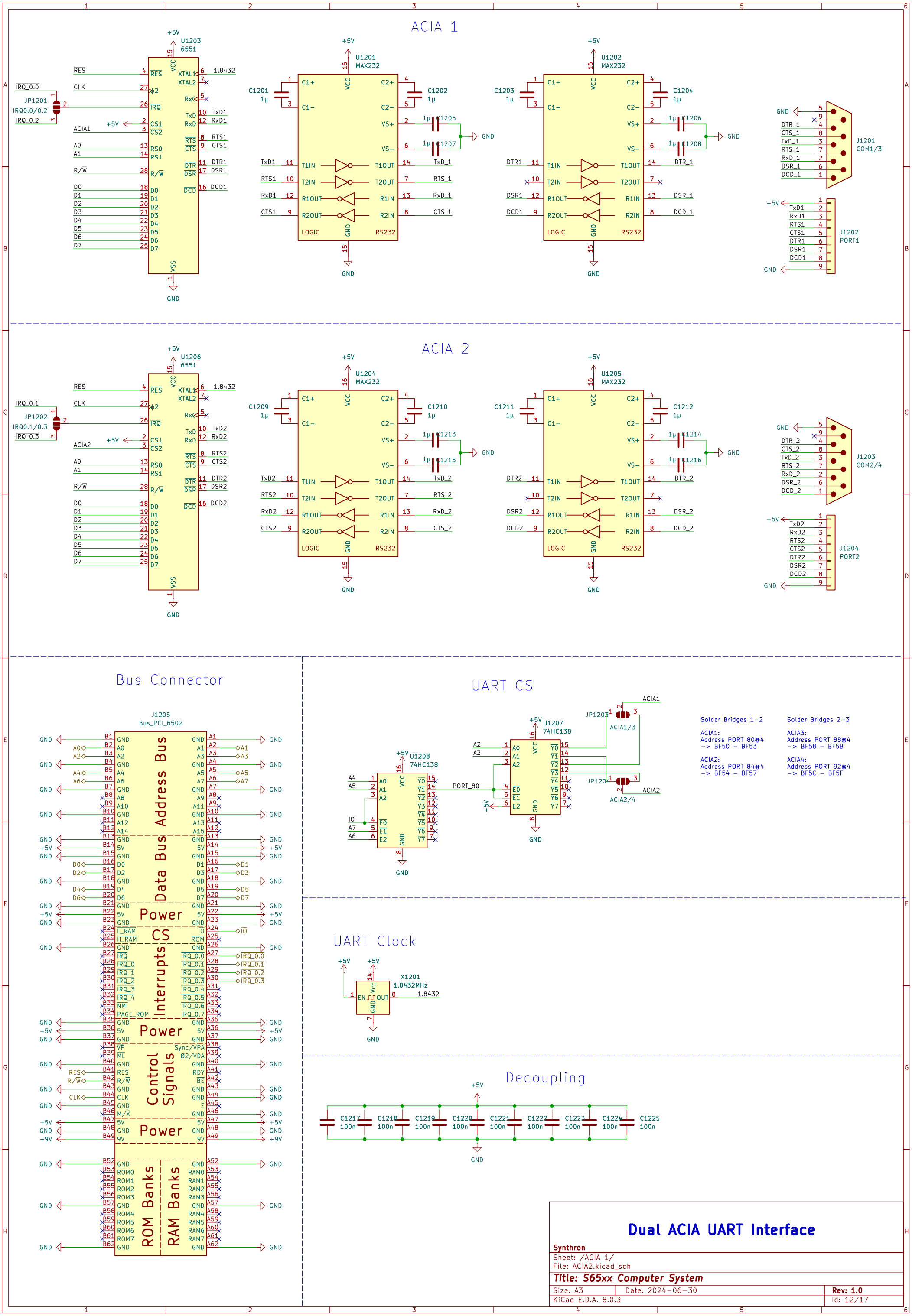
ACIA 1
U1203
6551
U1201
MAX232
U1202
MAX232
J1201
COM1/3
J1202
PORT1
ACIA 2
U1206
6551
U1204
MAX232
U1205
MAX232
J1203
COM2/4
J1204
PORT2
Bus Connector
J1205
Bus_PCI_6502
Data Bus
Address Bus
Power
CS
Interrupts
Control Signals
ROM Banks
RAM Banks
UART CS
U1208
74HC138
U1207
74HC138
JP1203
JP1204
ACIA1/3
ACIA2/4
Solder Bridges 1-2
ACIA1:
Address PORT 80@4
-> BF50 - BF53
ACIA2:
Address PORT 84@4
-> BF54 - BF57
Solder Bridges 2-3
ACIA3:
Address PORT 88@4
-> BF58 - BF5B
ACIA4:
Address PORT 92@4
-> BF5C - BF5F
UART Clock
X1201
1.8432MHz
Decoupling
Dual ACIA UART Interface
Synthron
Sheet: /ACIA 1/
File: ACIA2.kicad_sch
Title: S65xx Computer System
Size: A3
Date: 2024-06-30
Rev: 1.0
KiCad E.D.A. 8.0.3
Id: 12/17

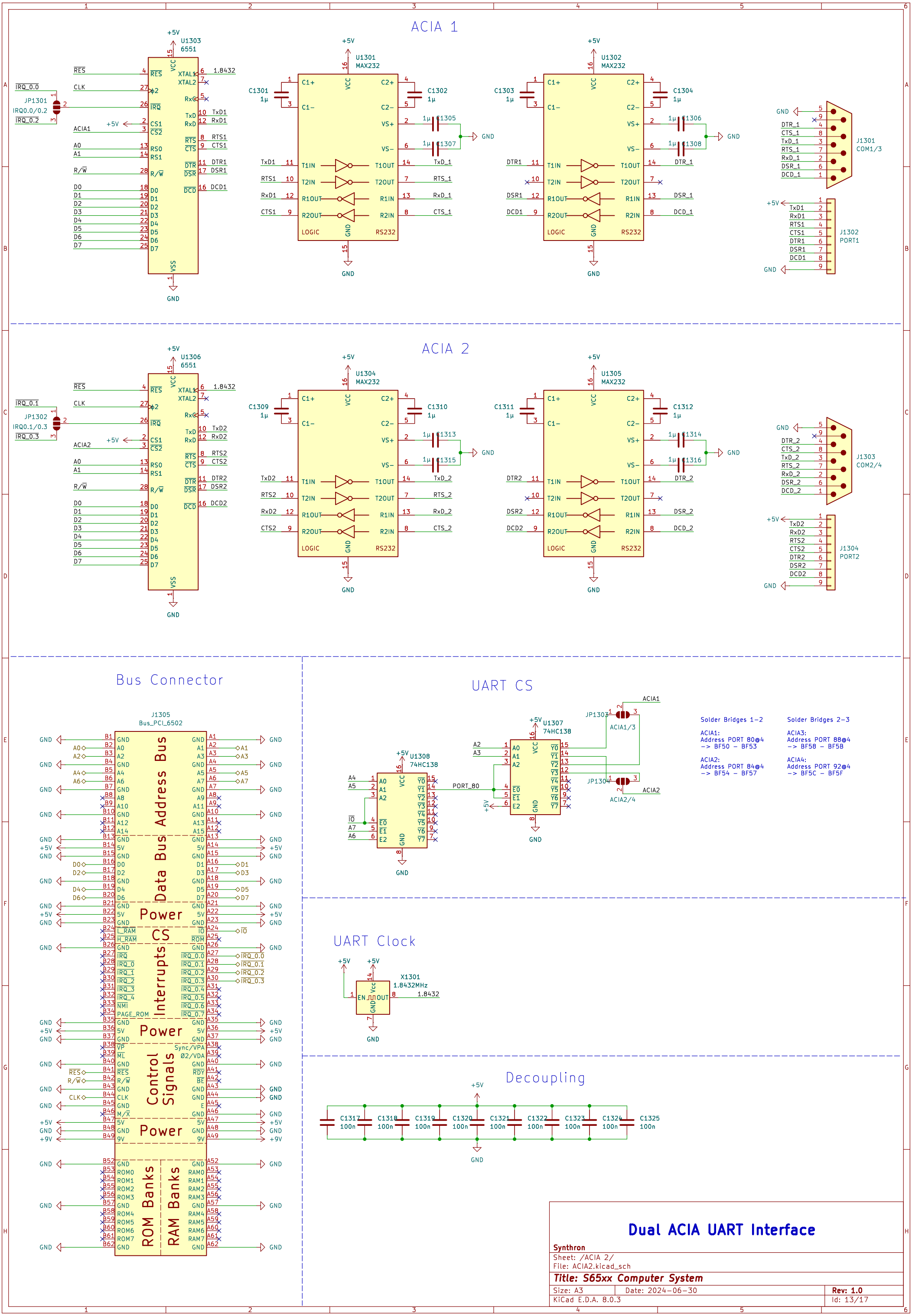
ACIA 1
U1303
6551
U1301
MAX232
U1302
MAX232
J1301
COM1/3
J1302
PORT1
ACIA 2
U1306
6551
U1304
MAX232
U1305
MAX232
J1303
COM2/4
J1304
PORT2
Bus Connector
J1305
Bus_PCI_6502
Data Bus
Address Bus
Power
CS
Interrupts
Control Signals
ROM Banks
RAM Banks
UART CS
U1308
74HC138
U1307
74HC138
Solder Bridges 1-2
ACIA1:
Address PORT 80@4
-> BF50 - BF53
ACIA2:
Address PORT 84@4
-> BF54 - BF57
Solder Bridges 2-3
ACIA3:
Address PORT 88@4
-> BF58 - BF5B
ACIA4:
Address PORT 92@4
-> BF5C - BF5F
UART Clock
X1301
1.8432MHz
Decoupling
Dual ACIA UART Interface
Synthron
Sheet: /ACIA 2/
File: ACIA2.kicad_sch
Title: S65xx Computer System
Size: A3
Date: 2024-06-30
Rev: 1.0
KiCad E.D.A. 8.0.3
Id: 13/17

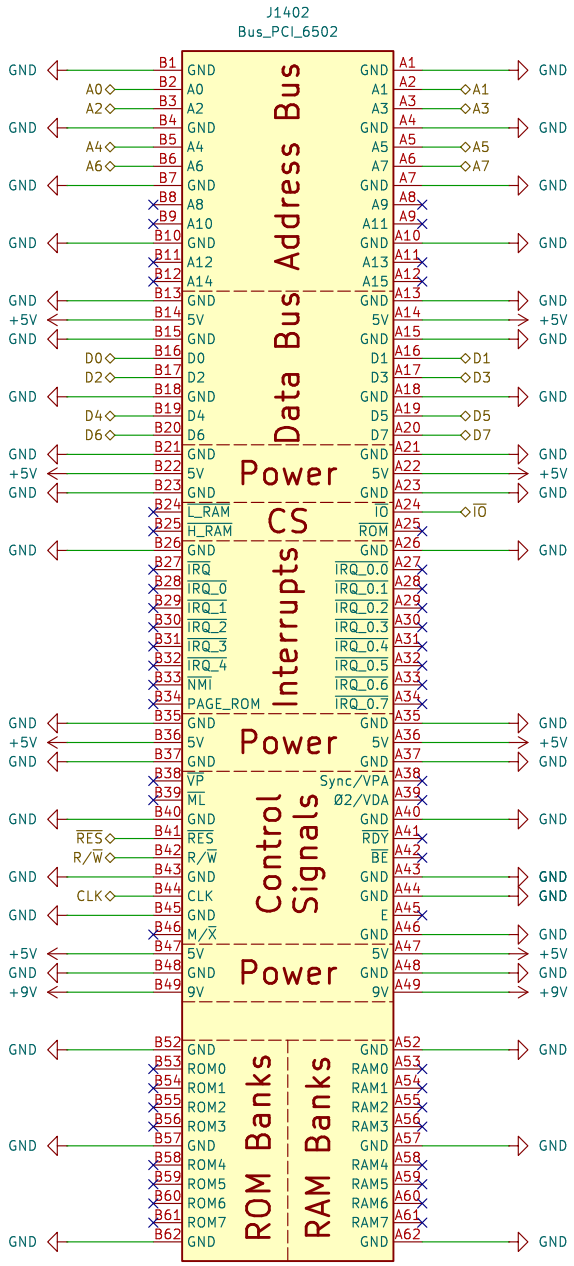

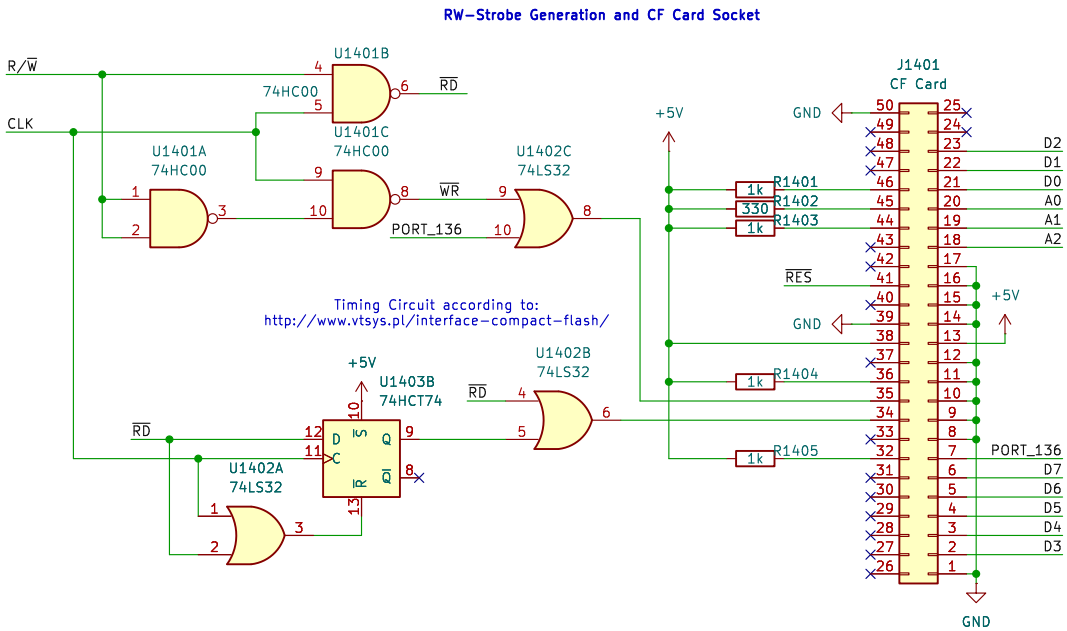

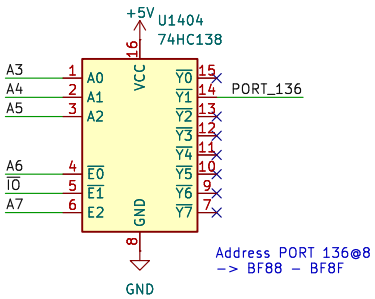

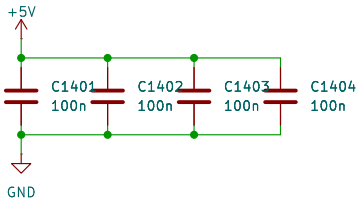

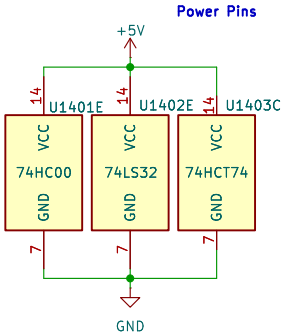

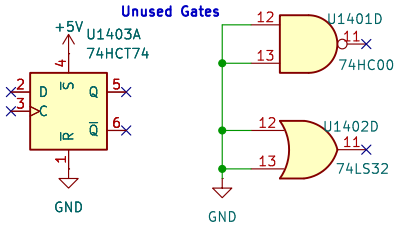

CF Card Interface

Synthron

Sheet: /CF Card/

File: CF.kicad_sch

Title: S65xx Computer System

Size: A4	Date: 2024-06-30	Rev: 1.0
KiCad E.D.A. 8.0.3		Id: 14/17

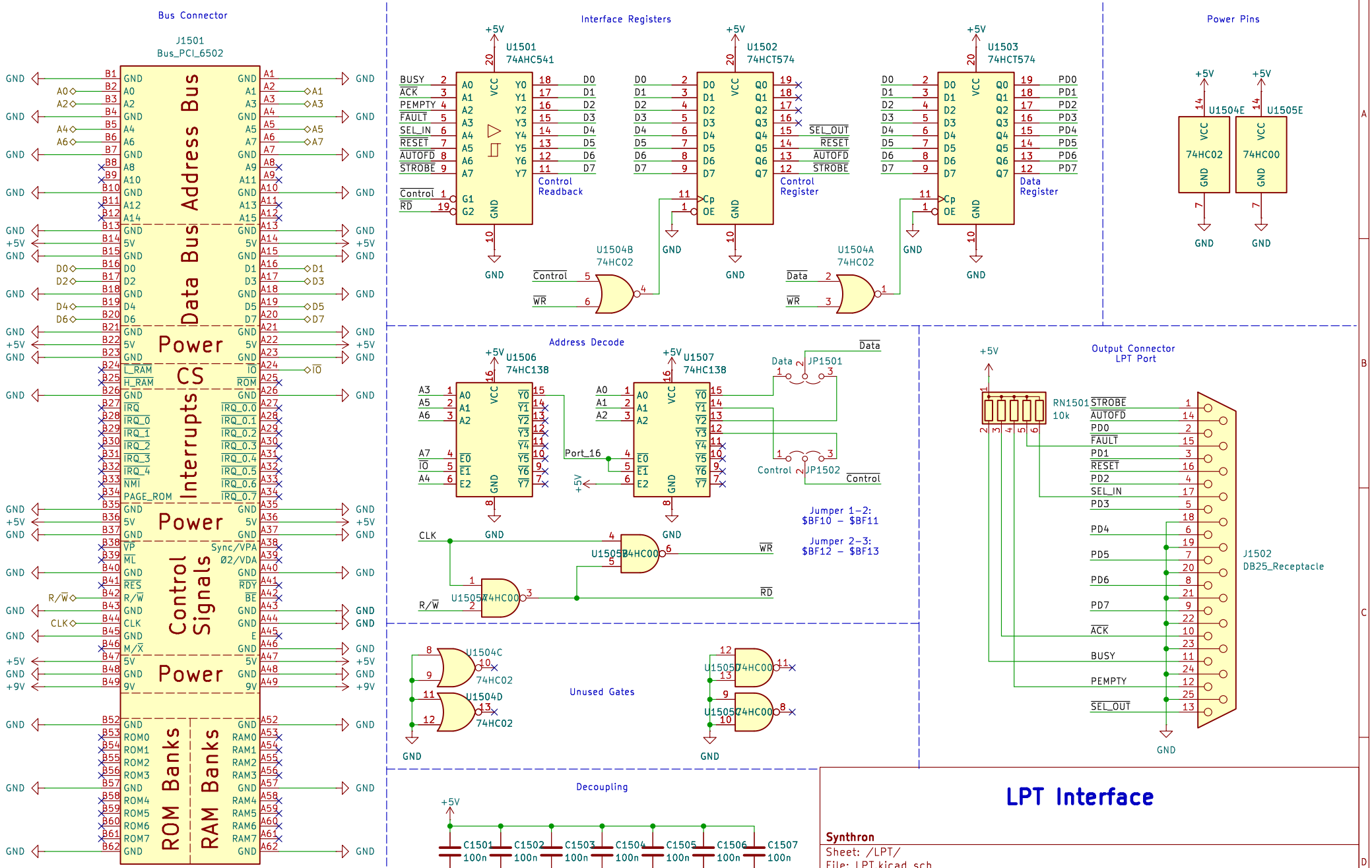
Bus Connector
J1501
Bus_PCI_6502
Address Bus
Data Bus
Power
CS
Interrupts
Power
Control Signals
Power
ROM Banks
RAM Banks
Interface Registers
U1501
74AHC541
Control Readback
U1502
74HCT574
Control Register
U1503
74HCT574
Data Register
U1504B
74HC02
U1504A
74HC02
Power Pins
U1504E
74HC02
U1505E
74HC00
Address Decode
U1506
74HC138
U1507
74HC138
JP1501
JP1502
Jumper 1-2:
$BF10 - $BF11
Jumper 2-3:
$BF12 - $BF13
U1505B
74HC00
U1505A
74HC00
Output Connector
LPT Port
RN1501
10k
J1502
DB25_Receptacle
Unused Gates
U1504C
74HC02
U1504D
74HC02
U1505D
74HC00
U1505C
74HC00
Decoupling
C1501 100n
C1502 100n
C1503 100n
C1504 100n
C1505 100n
C1506 100n
C1507 100n
LPT Interface
Synthron
Sheet: /LPT/
File: LPT.kicad_sch
Title: S65xx Computer System
Size: A4
Date: 2024-06-30
Rev: 1.0
KiCad E.D.A. 8.0.3
Id: 15/17

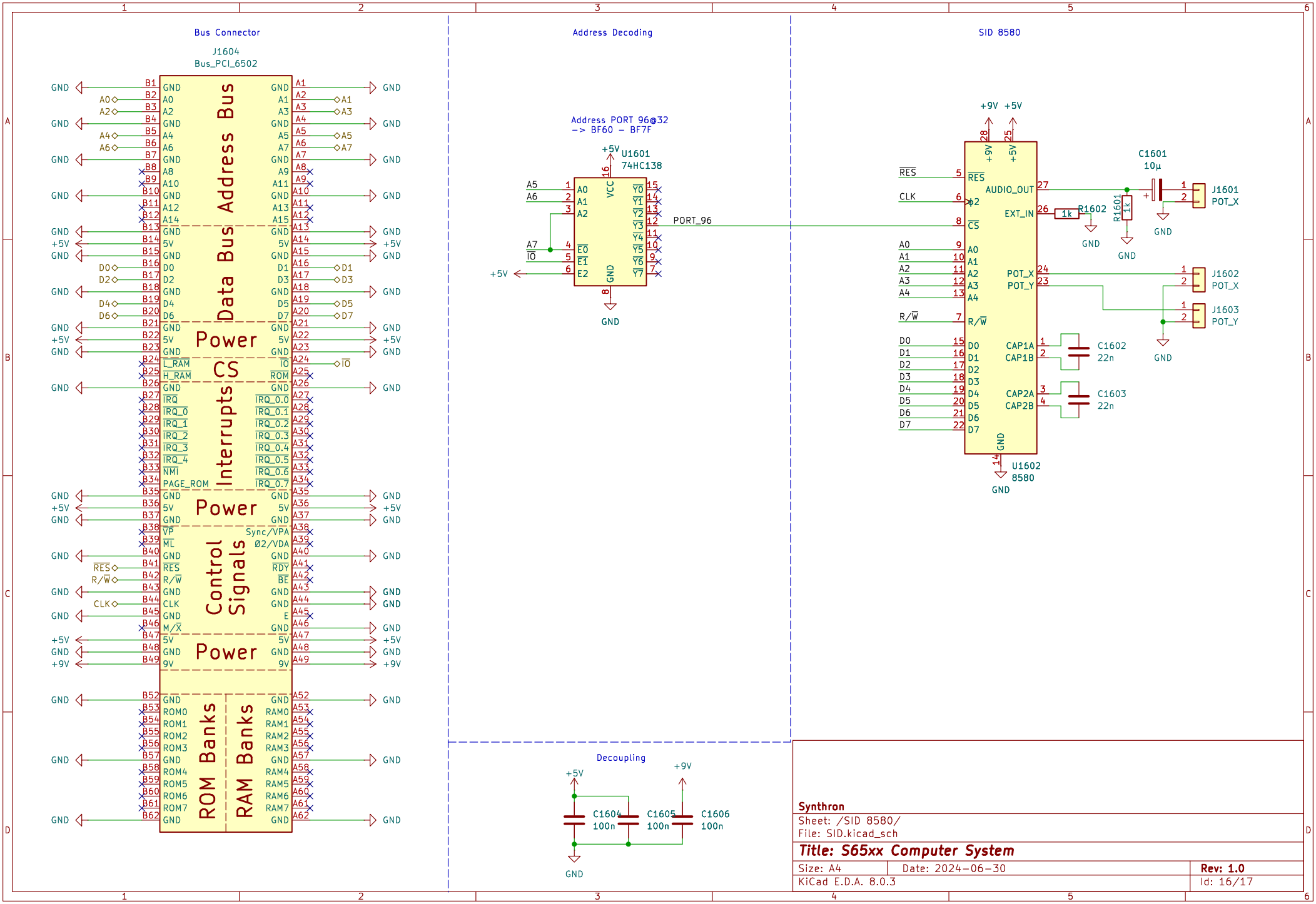
Bus Connector
J1604
Bus_PCI_6502
Address Bus
Data Bus
Power
CS
Interrupts
Control Signals
ROM Banks
RAM Banks
Address Decoding
Address PORT 96@32
-> BF60 - BF7F
U1601
74HC138
PORT_96
SID 8580
U1602
8580
C1601
10µ
J1601
POT_X
J1602
POT_X
J1603
POT_Y
C1602
22n
C1603
22n
R1601
1k
R1602
1k
Decoupling
C1604
100n
C1605
100n
C1606
100n
Synthron
Sheet: /SID 8580/
File: SID.kicad_sch
Title: S65xx Computer System
Size: A4
Date: 2024-06-30
Rev: 1.0
KiCad E.D.A. 8.0.3
Id: 16/17

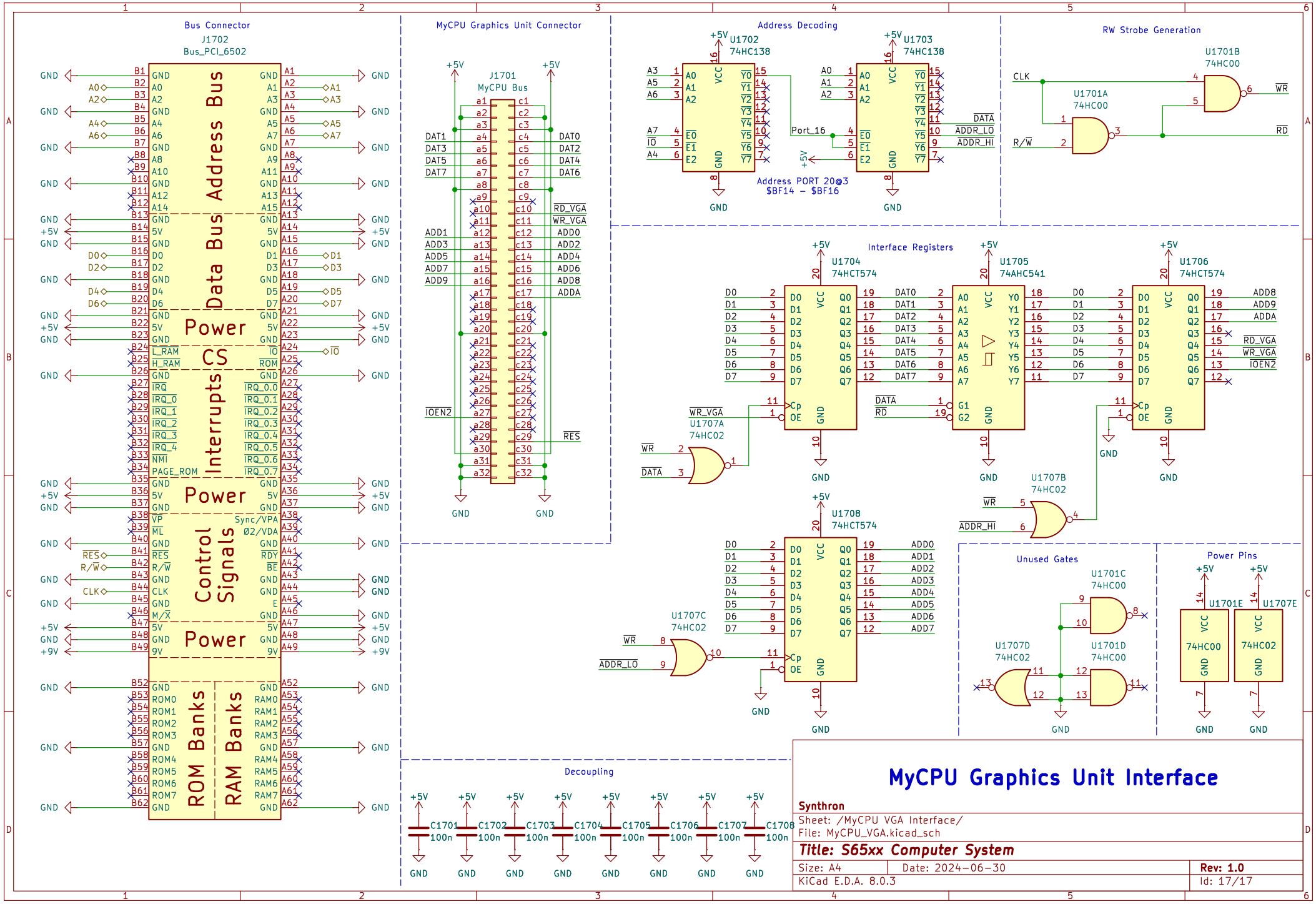
Bus Connector
J1702
Bus_PCI_6502
Address Bus
Data Bus
Power
CS
Interrupts
Power
Control Signals
Power
ROM Banks
RAM Banks
MyCPU Graphics Unit Connector
J1701
MyCPU Bus
Address Decoding
U1702
74HC138
U1703
74HC138
Port_16
Address PORT 20@3
$BF14 – $BF16
RW Strobe Generation
U1701B
74HC00
U1701A
74HC00
Interface Registers
U1704
74HCT574
U1705
74AHC541
U1706
74HCT574
U1707A
74HC02
U1707B
74HC02
U1708
74HCT574
U1707C
74HC02
Unused Gates
U1701C
74HC00
U1707D
74HC02
U1701D
74HC00
Power Pins
U1701E
74HC00
U1707E
74HC02
Decoupling
C1701 100n
C1702 100n
C1703 100n
C1704 100n
C1705 100n
C1706 100n
C1707 100n
C1708 100n
MyCPU Graphics Unit Interface
Synthron
Sheet: /MyCPU VGA Interface/
File: MyCPU_VGA.kicad_sch
Title: S65xx Computer System
Size: A4
Date: 2024-06-30
Rev: 1.0
KiCad E.D.A. 8.0.3
Id: 17/17