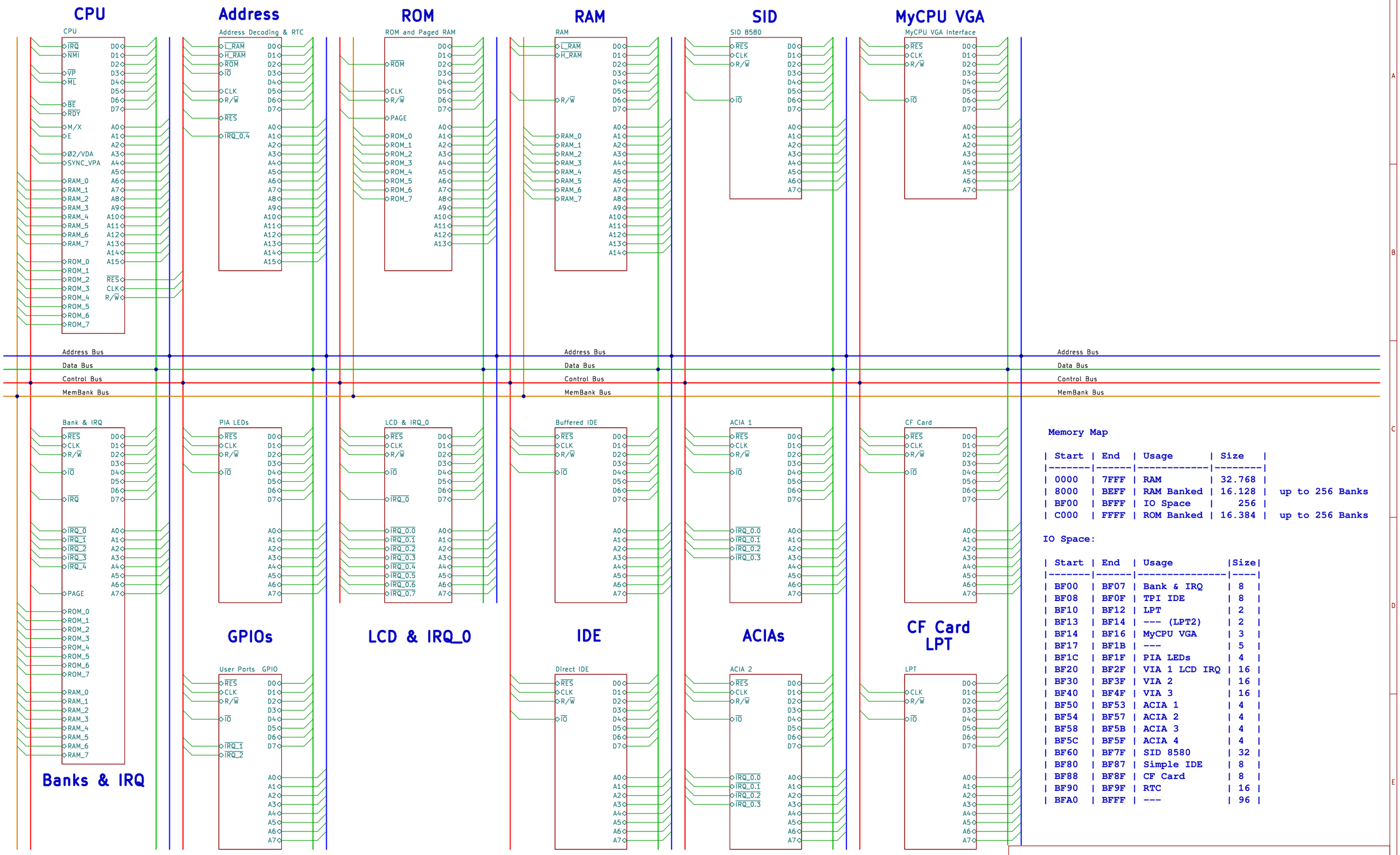

Memory Map

Start	End	Usage	Size	
0000	7FFF	RAM	32.768	
8000	BEFF	RAM Banked	16.128	up to 256 Banks
BF00	BFFF	IO Space	256	
C000	FFFF	ROM Banked	16.384	up to 256 Banks

IO Space:

Start	End	Usage	Size
BF00	BF07	Bank & IRQ	8
BF08	BF0F	TPI IDE	8
BF10	BF12	LPT	2
BF13	BF14	--- (LPT2)	2
BF14	BF16	MyCPU VGA	3
BF17	BF1B	---	5
BF1C	BF1F	PIA LEDs	4
BF20	BF2F	VIA 1 LCD IRQ	16
BF30	BF3F	VIA 2	16
BF40	BF4F	VIA 3	16
BF50	BF53	ACIA 1	4
BF54	BF57	ACIA 2	4
BF58	BF5B	ACIA 3	4
BF5C	BF5F	ACIA 4	4
BF60	BF7F	SID 8580	32
BF80	BF87	Simple IDE	8
BF88	BF8F	CF Card	8
BF90	BF9F	RTC	16
BFA0	BFFF	---	96

System Overview

Synthron

Sheet: /

File: overview.kicad_sch

Title: S65xx Computer System Overview

Size: A3 | Date: 2024-06-30 | Rev: 1.1

KiCad E.D.A. 8.0.4 | Id: 1/17

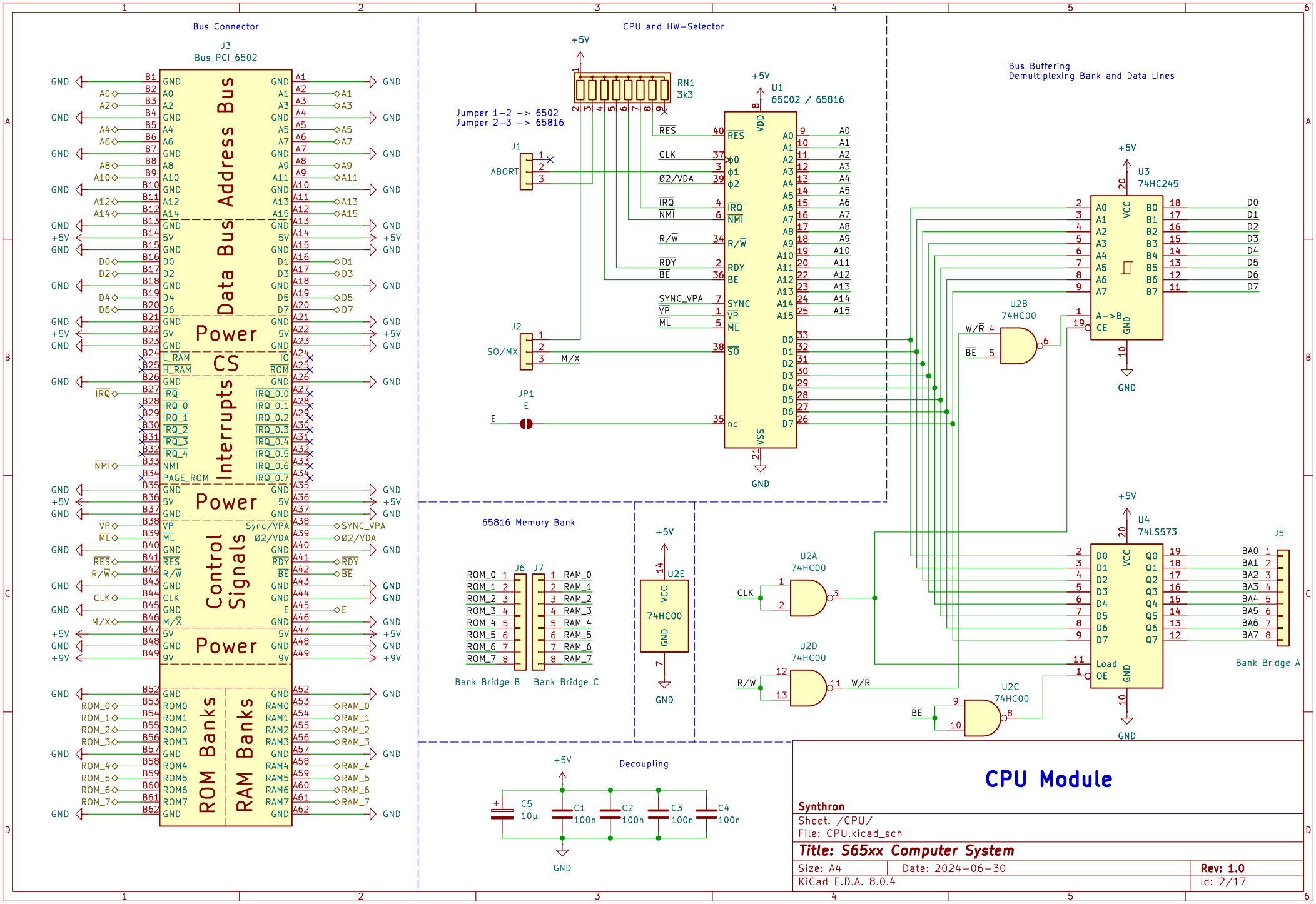
Bus Connector
J3
Bus_PCI_6502
Address Bus
Data Bus
Power
CS
Interrupts
Control Signals
ROM Banks
RAM Banks
CPU and HW-Selector
RN1
3k3
Jumper 1-2 -> 6502
Jumper 2-3 -> 65816
U1
65C02 / 65816
J1
ABORT
J2
SO/MX
JP1
E
Bus Buffering
Demultiplexing Bank and Data Lines
U3
74HC245
U2B
74HC00
U4
74LS573
J5
Bank Bridge A
U2A
74HC00
U2D
74HC00
U2C
74HC00
65816 Memory Bank
J6
J7
Bank Bridge B
Bank Bridge C
U2E
74HC00
Decoupling
C5
10µ
C1
100n
C2
100n
C3
100n
C4
100n
CPU Module
Synthron
Sheet: /CPU/
File: CPU.kicad_sch
Title: S65xx Computer System
Size: A4
Date: 2024-06-30
Rev: 1.0
KiCad E.D.A. 8.0.4
Id: 2/17

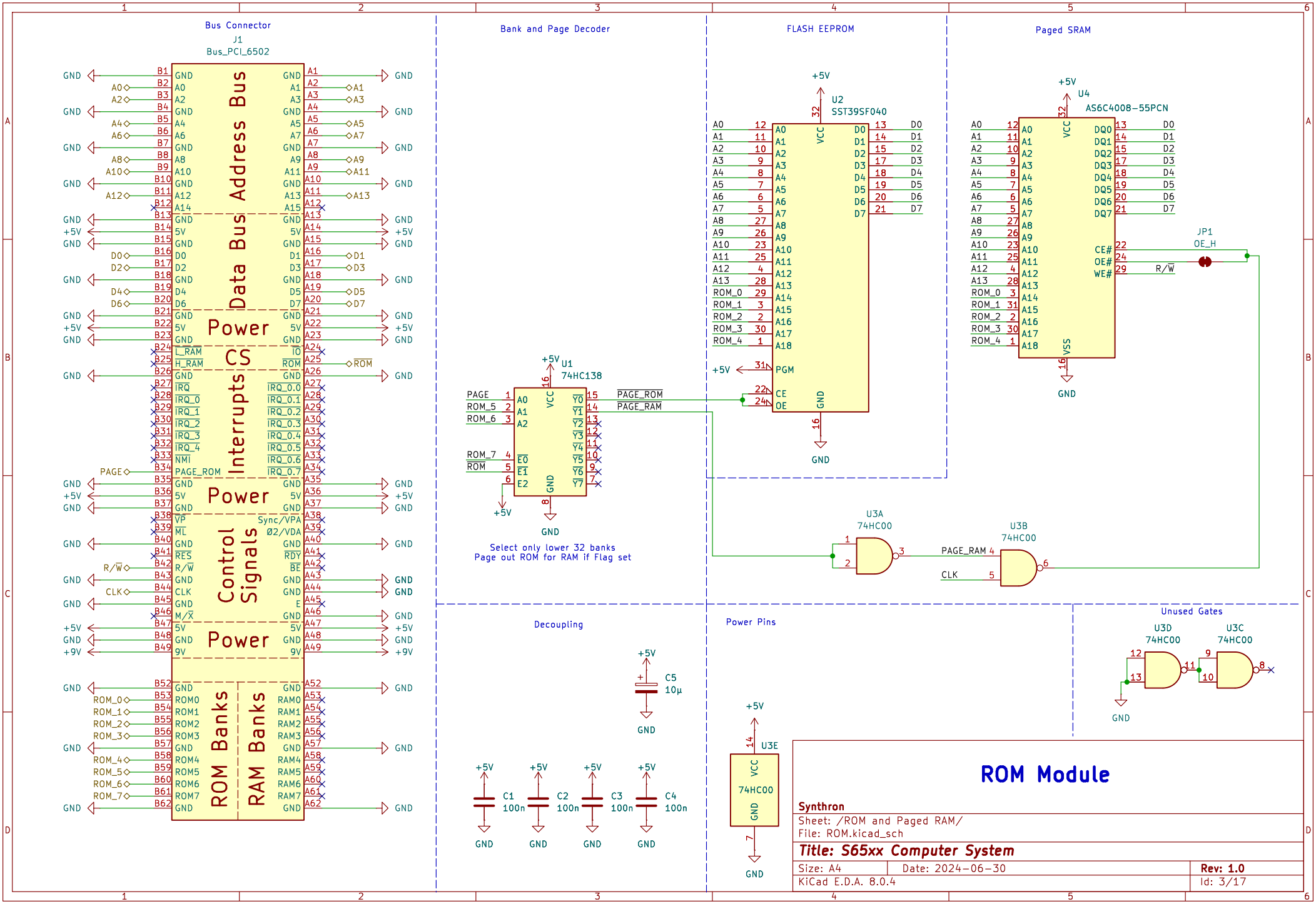
Bus Connector
J1
Bus_PCI_6502
Address Bus
Data Bus
Power
CS
Interrupts
Power
Control Signals
Power
ROM Banks
RAM Banks
Bank and Page Decoder
U1
74HC138
Select only lower 32 banks
Page out ROM for RAM if Flag set
FLASH EEPROM
U2
SST39SF040
Paged SRAM
U4
AS6C4008-55PCN
JP1
OE_H
U3A
74HC00
U3B
74HC00
Decoupling
C5
10µ
C1
100n
C2
100n
C3
100n
C4
100n
Power Pins
U3E
74HC00
Unused Gates
U3D
74HC00
U3C
74HC00
ROM Module
Synthron
Sheet: /ROM and Paged RAM/
File: ROM.kicad_sch
Title: S65xx Computer System
Size: A4
Date: 2024-06-30
Rev: 1.0
KiCad E.D.A. 8.0.4
Id: 3/17

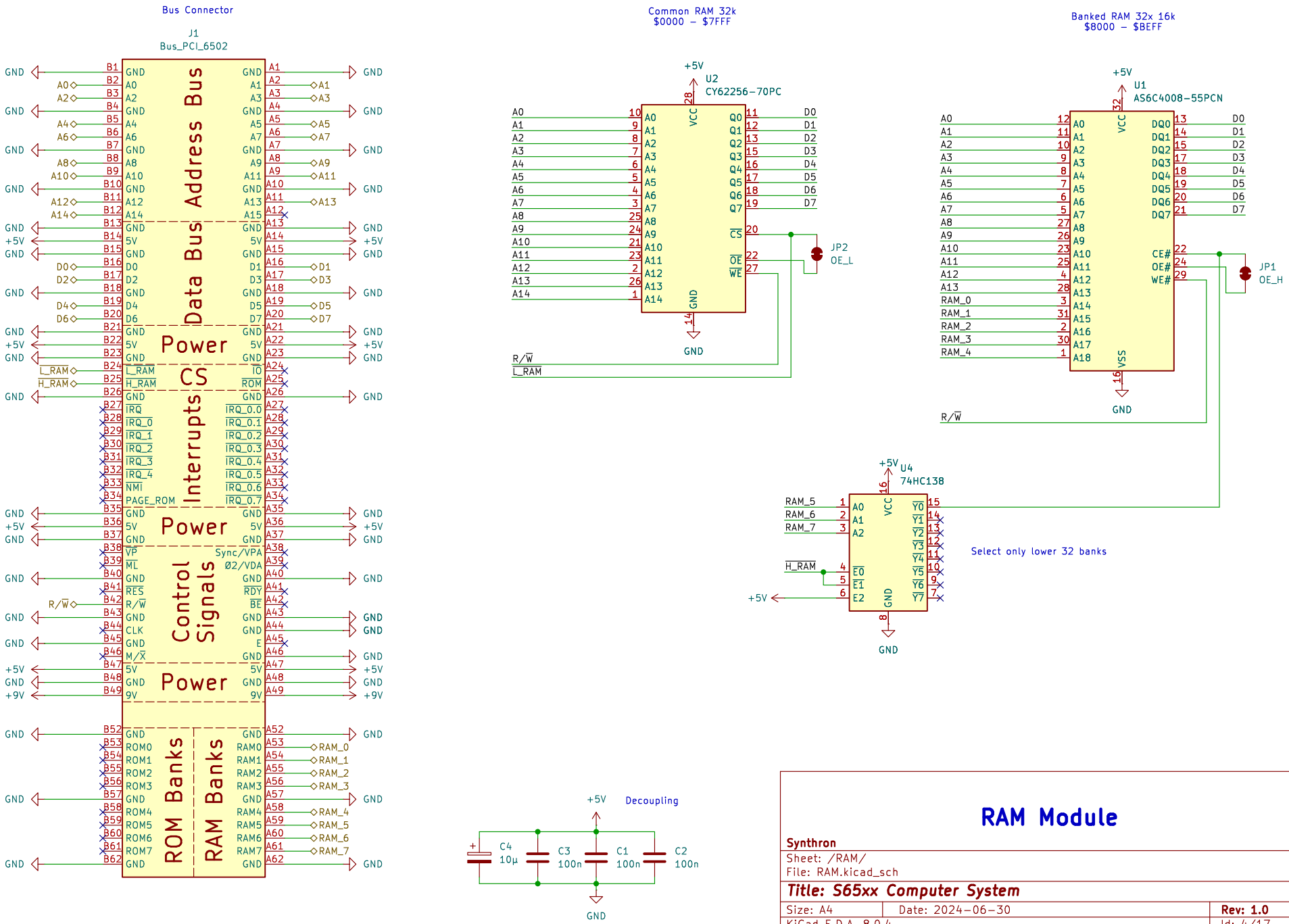
Bus Connector
J1
Bus_PCI_6502
Address Bus
Data Bus
Power
CS
Interrupts
Power
Control Signals
Power
ROM Banks
RAM Banks
Common RAM 32k
$0000 – $7FFF
U2
CY62256-70PC
JP2
OE_L
Banked RAM 32x 16k
$8000 – $BEFF
U1
AS6C4008-55PCN
JP1
OE_H
U4
74HC138
Select only lower 32 banks
Decoupling
C4
10µ
C3
100n
C1
100n
C2
100n
RAM Module
Synthron
Sheet: /RAM/
File: RAM.kicad_sch
Title: S65xx Computer System
Size: A4
Date: 2024-06-30
Rev: 1.0
KiCad E.D.A. 8.0.4
Id: 4/17

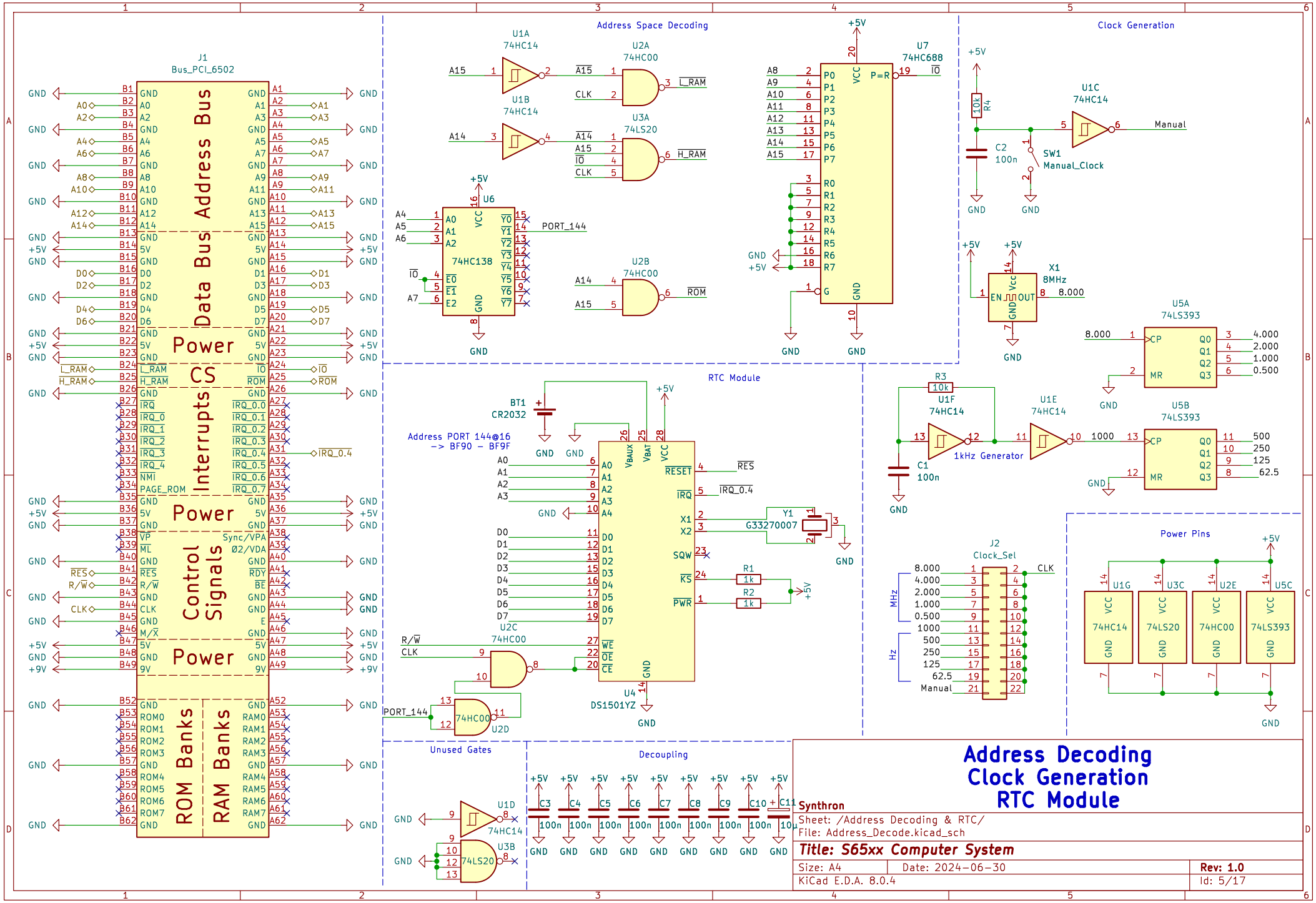
J1
Bus_PCI_6502
Address Bus
Data Bus
Power
CS
Interrupts
Power
Control Signals
Power
ROM Banks
RAM Banks
Address Space Decoding
U1A 74HC14
U1B 74HC14
U2A 74HC00
U3A 74LS20
U2B 74HC00
U6 74HC138
PORT_144
U7 74HC688
Clock Generation
U1C 74HC14
Manual
SW1 Manual_Clock
C2 100n
R4 10k
X1 8MHz
U5A 74LS393
U5B 74LS393
R3 10k
U1F 74HC14
U1E 74HC14
1kHz Generator
C1 100n
RTC Module
BT1 CR2032
Address PORT 144@16
-> BF90 - BF9F
U4 DS1501YZ
Y1 G33270007
R1 1k
R2 1k
U2C 74HC00
U2D 74HC00
J2 Clock_Sel
MHz
Hz
Power Pins
U1G 74HC14
U3C 74LS20
U2E 74HC00
U5C 74LS393
Unused Gates
U1D 74HC14
U3B 74LS20
Decoupling
C3 100n
C4 100n
C5 100n
C6 100n
C7 100n
C8 100n
C9 100n
C10 100n
C11 10µ
Address Decoding
Clock Generation
RTC Module
Synthron
Sheet: /Address Decoding & RTC/
File: Address_Decode.kicad_sch
Title: S65xx Computer System
Size: A4
Date: 2024-06-30
Rev: 1.0
KiCad E.D.A. 8.0.4
Id: 5/17

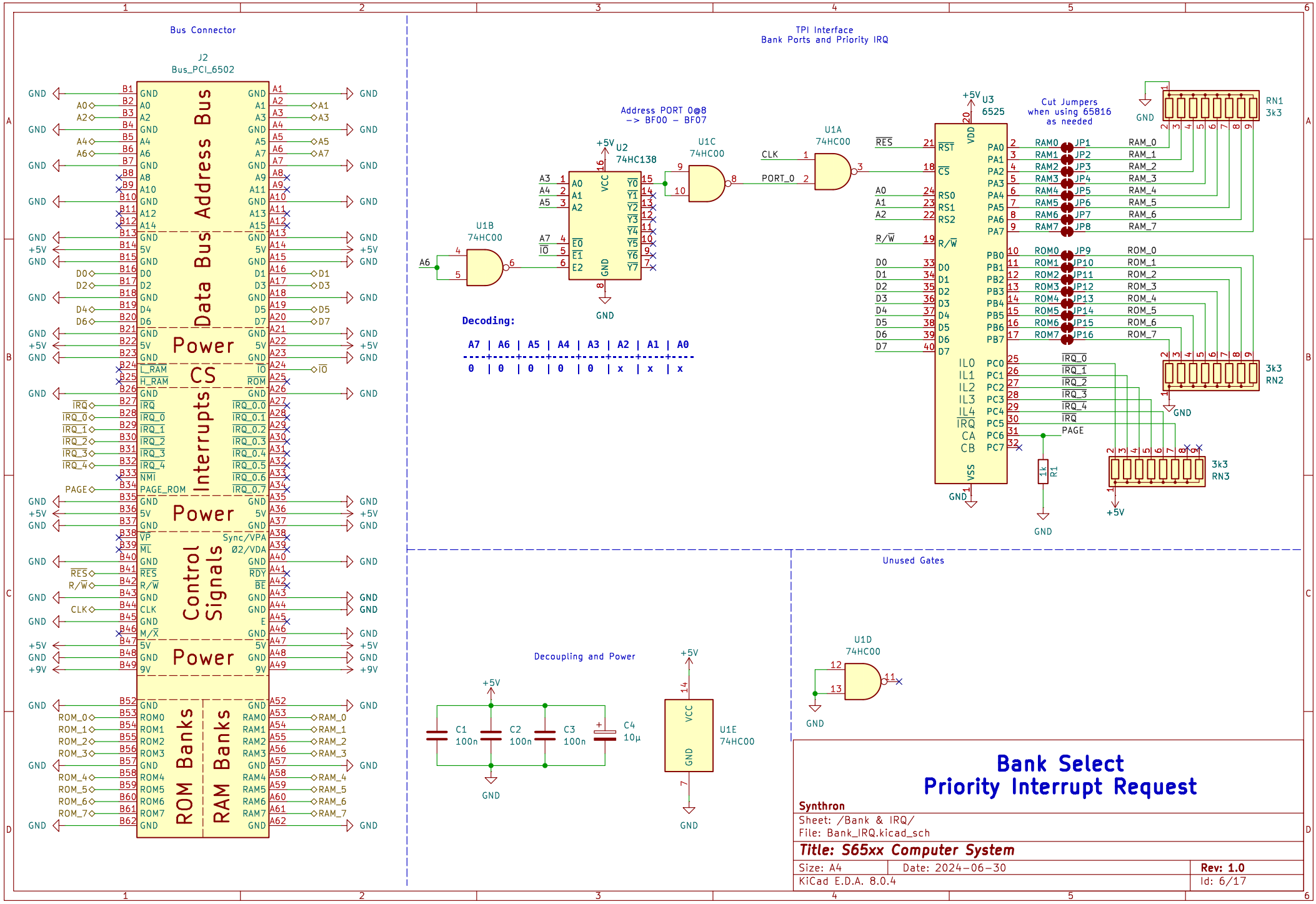
Bus Connector
J2
Bus_PCI_6502
Address Bus
Data Bus
Power
CS
Interrupts
Power
Control Signals
Power
ROM Banks
RAM Banks
TPI Interface
Bank Ports and Priority IRQ
Address PORT 0@8
-> BF00 - BF07
U2
74HC138
U1C
74HC00
U1A
74HC00
U1B
74HC00
U3
6525
Cut Jumpers
when using 65816
as needed
RN1
3k3
RN2
3k3
RN3
3k3
R1
1k
Decoding:
A7 | A6 | A5 | A4 | A3 | A2 | A1 | A0
0 | 0 | 0 | 0 | 0 | x | x | x
Decoupling and Power
C1
100n
C2
100n
C3
100n
C4
10µ
U1E
74HC00
Unused Gates
U1D
74HC00
Bank Select
Priority Interrupt Request
Synthron
Sheet: /Bank & IRQ/
File: Bank_IRQ.kicad_sch
Title: S65xx Computer System
Size: A4
Date: 2024-06-30
Rev: 1.0
KiCad E.D.A. 8.0.4
Id: 6/17

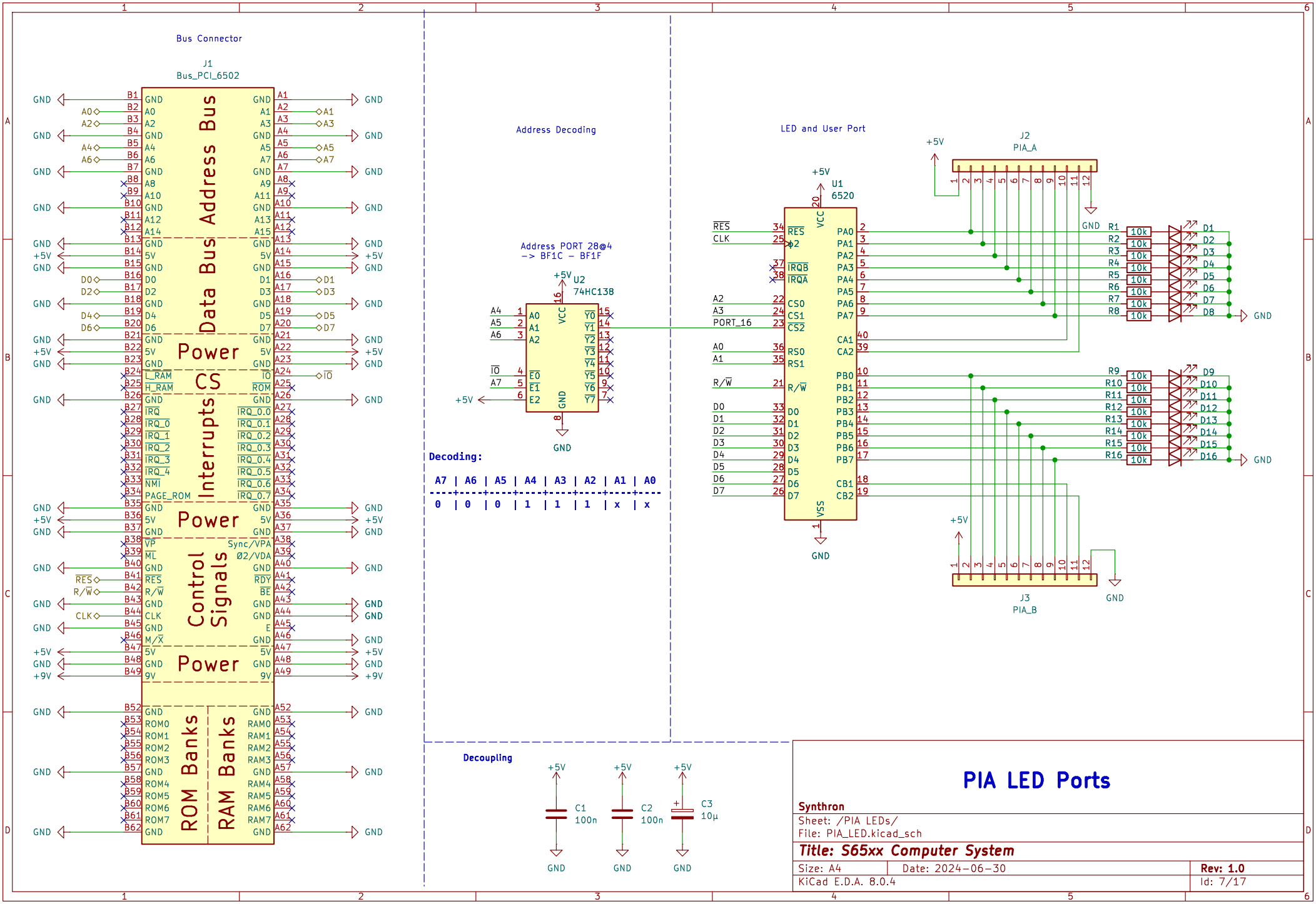
Bus Connector
J1
Bus_PCI_6502
Address Bus
Data Bus
Power
CS
Interrupts
Power
Control Signals
Power
ROM Banks
RAM Banks
Address Decoding
Address PORT 28@4
-> BF1C - BF1F
U2
74HC138
Decoding:
A7 | A6 | A5 | A4 | A3 | A2 | A1 | A0
0 | 0 | 0 | 1 | 1 | 1 | x | x
LED and User Port
U1
6520
J2
PIA_A
J3
PIA_B
Decoupling
C1
100n
C2
100n
C3
10µ
PIA LED Ports
Synthron
Sheet: /PIA LEDs/
File: PIA_LED.kicad_sch
Title: S65xx Computer System
Size: A4
Date: 2024-06-30
Rev: 1.0
KiCad E.D.A. 8.0.4
Id: 7/17

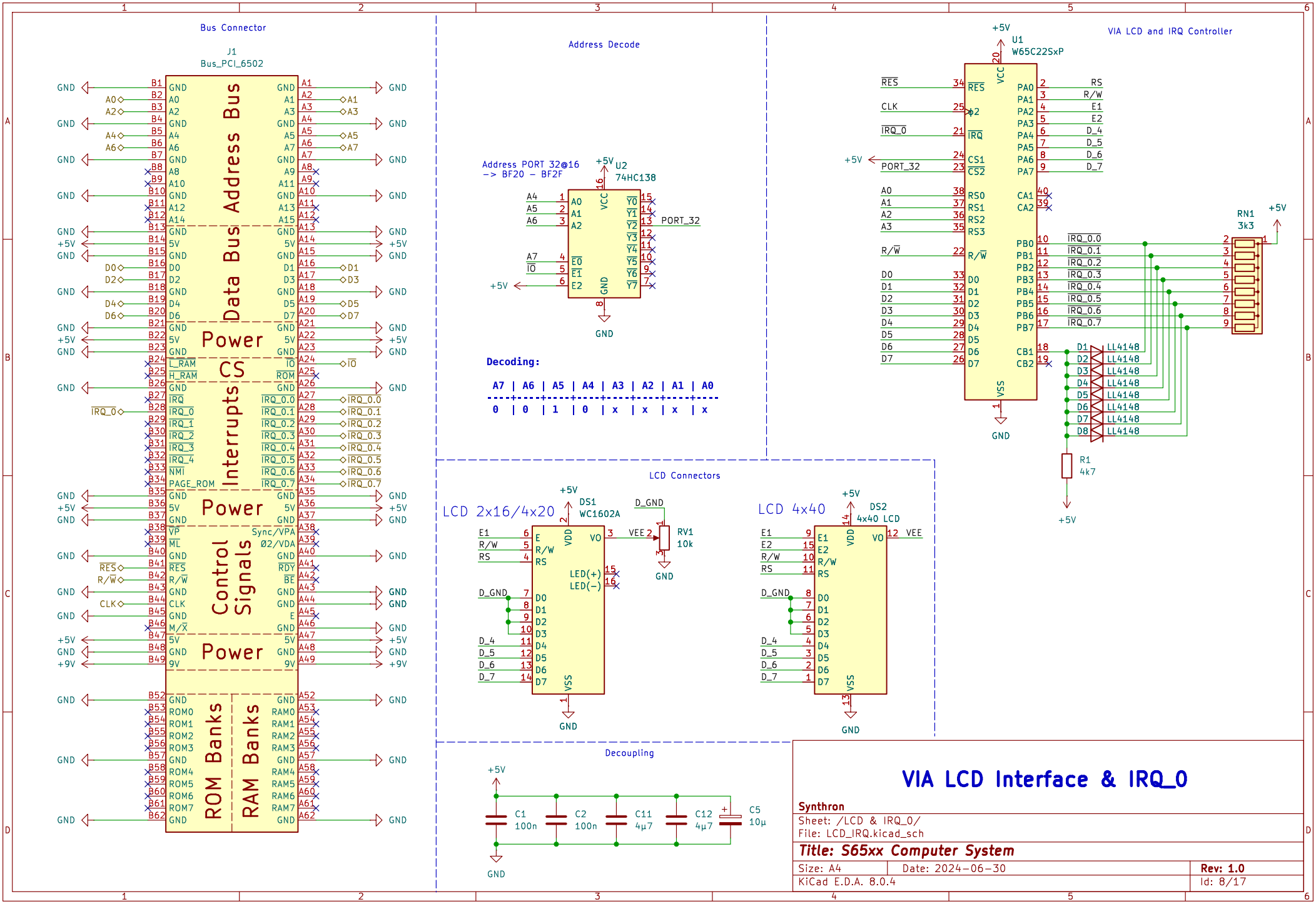
Bus Connector
J1
Bus_PCI_6502
Address Bus
Data Bus
Power
CS
Interrupts
Control Signals
ROM Banks
RAM Banks
Address Decode
Address PORT 32@16
-> BF20 - BF2F
U2
74HC138
PORT_32
Decoding:
A7 | A6 | A5 | A4 | A3 | A2 | A1 | A0
0 | 0 | 1 | 0 | x | x | x | x
VIA LCD and IRQ Controller
U1
W65C22SxP
RN1
3k3
R1
4k7
LL4148
LCD Connectors
LCD 2x16/4x20
DS1
WC1602A
RV1
10k
LCD 4x40
DS2
4x40 LCD
Decoupling
C1
100n
C2
100n
C11
4µ7
C12
4µ7
C5
10µ
VIA LCD Interface & IRQ_0
Synthron
Sheet: /LCD & IRQ_0/
File: LCD_IRQ.kicad_sch
Title: S65xx Computer System
Size: A4
Date: 2024-06-30
Rev: 1.0
KiCad E.D.A. 8.0.4
Id: 8/17

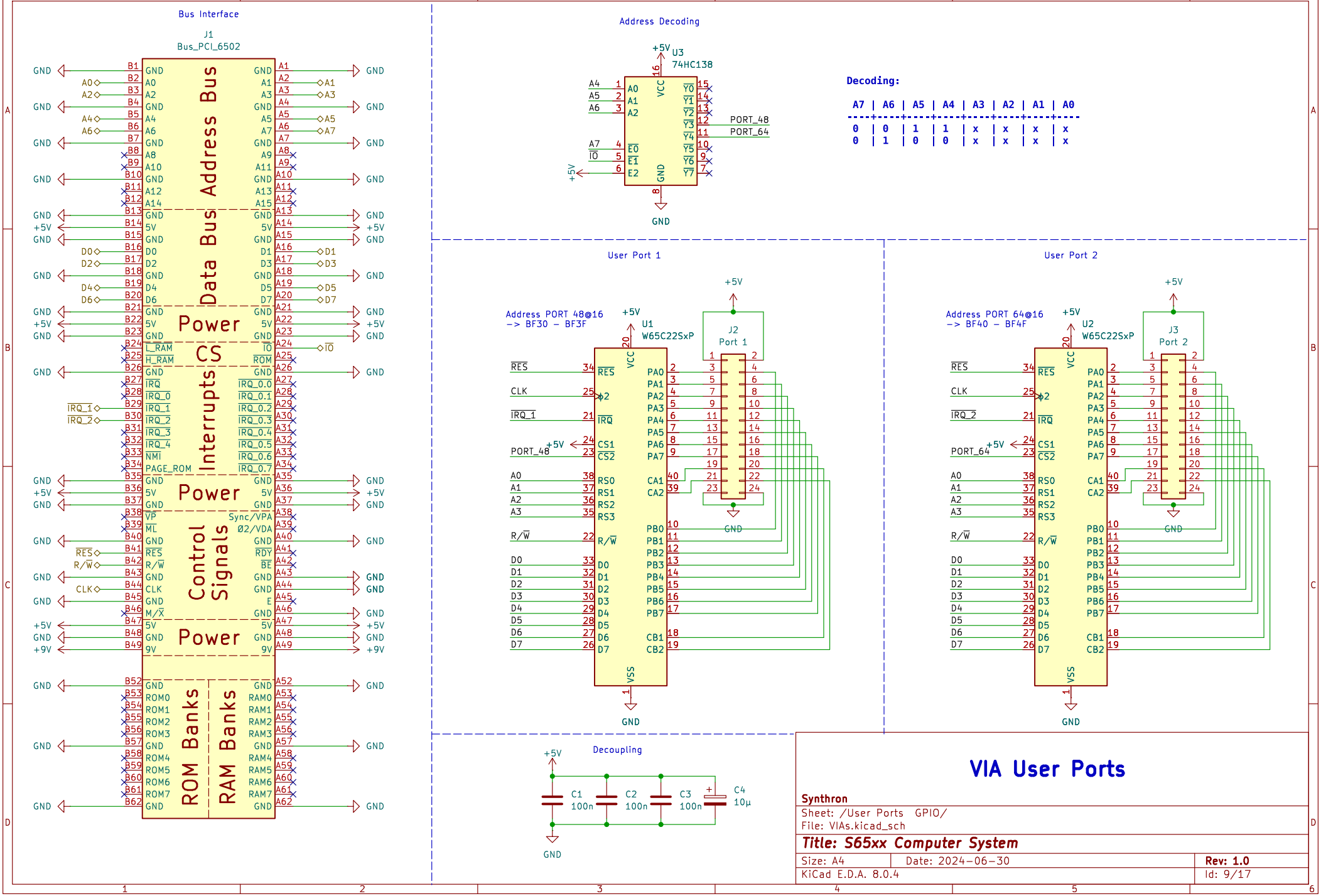
Bus Interface
J1
Bus_PCI_6502
Address Bus
Data Bus
Power
CS
Interrupts
Power
Control Signals
Power
ROM Banks
RAM Banks
Address Decoding
U3
74HC138
Decoding:
A7 | A6 | A5 | A4 | A3 | A2 | A1 | A0
0 | 0 | 1 | 1 | x | x | x | x
0 | 1 | 0 | 0 | x | x | x | x
PORT_48
PORT_64
User Port 1
Address PORT 48@16
-> BF30 - BF3F
U1
W65C22SxP
J2
Port 1
User Port 2
Address PORT 64@16
-> BF40 - BF4F
U2
W65C22SxP
J3
Port 2
Decoupling
C1
100n
C2
100n
C3
100n
C4
10µ
VIA User Ports
Synthron
Sheet: /User Ports GPIO/
File: VIAs.kicad_sch
Title: S65xx Computer System
Size: A4
Date: 2024-06-30
Rev: 1.0
KiCad E.D.A. 8.0.4
Id: 9/17

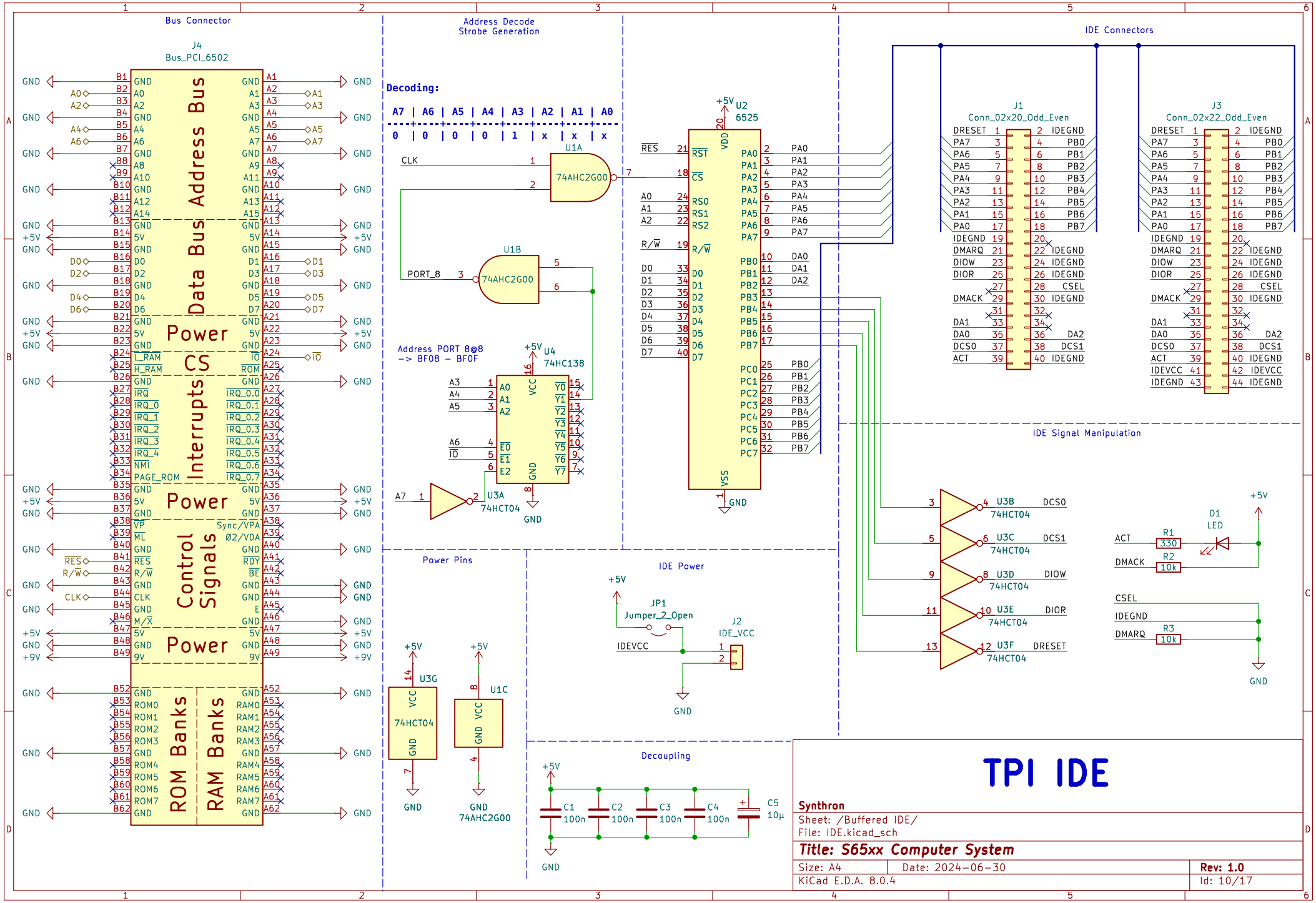
Bus Connector
J4
Bus_PCI_6502
Address Bus
Data Bus
Power
CS
Interrupts
Power
Control Signals
Power
ROM Banks
RAM Banks
Address Decode
Strobe Generation
Decoding:
A7 | A6 | A5 | A4 | A3 | A2 | A1 | A0
0 | 0 | 0 | 0 | 1 | x | x | x
U1A
74AHC2G00
U1B
74AHC2G00
PORT_8
Address PORT 8@8
-> BF08 - BF0F
U4
74HC138
U3A
74HCT04
U2
6525
IDE Connectors
J1
Conn_02x20_Odd_Even
J3
Conn_02x22_Odd_Even
IDE Signal Manipulation
U3B
74HCT04
U3C
74HCT04
U3D
74HCT04
U3E
74HCT04
U3F
74HCT04
D1
LED
R1
330
R2
10k
R3
10k
Power Pins
U3G
74HCT04
U1C
74AHC2G00
IDE Power
JP1
Jumper_2_Open
J2
IDE_VCC
Decoupling
C1
100n
C2
100n
C3
100n
C4
100n
C5
10µ
TPI IDE
Synthron
Sheet: /Buffered IDE/
File: IDE.kicad_sch
Title: S65xx Computer System
Size: A4
Date: 2024-06-30
Rev: 1.0
KiCad E.D.A. 8.0.4
Id: 10/17

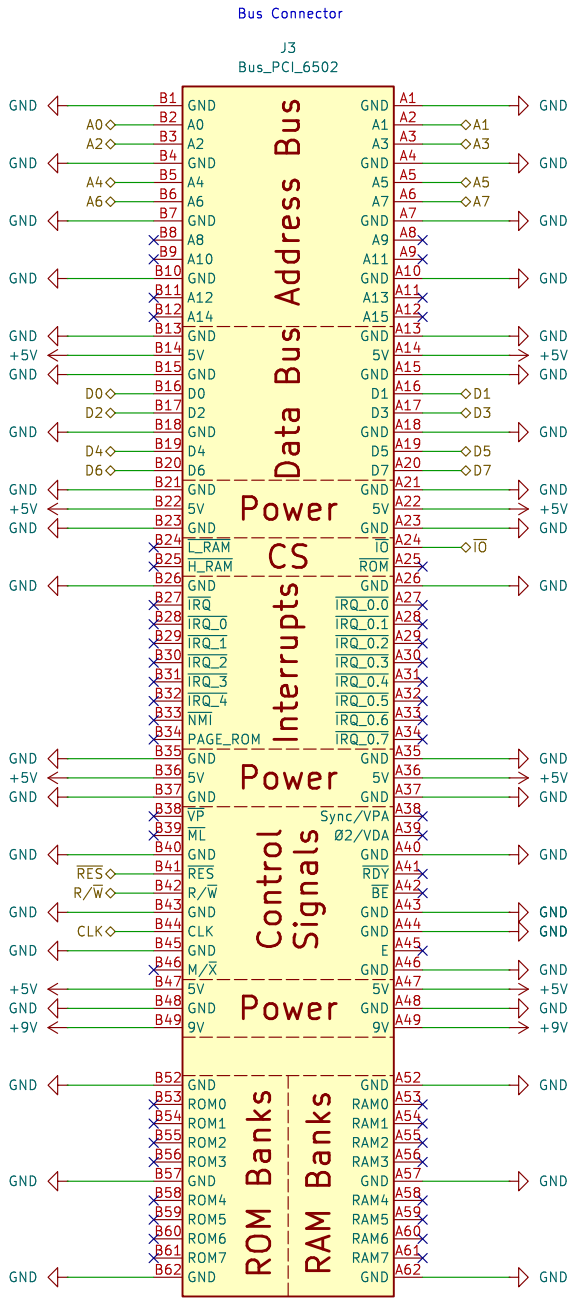

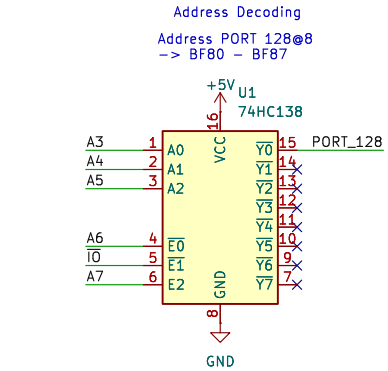

Decoding:

A7	A6	A5	A4	A3	A2	A1	A0
1	0	0	0	0	x	x	x

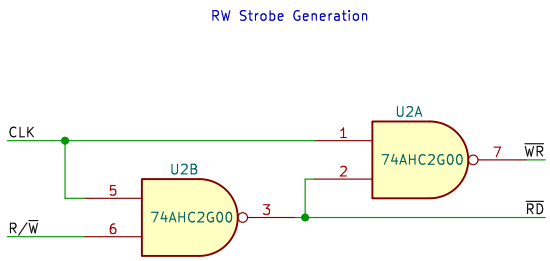

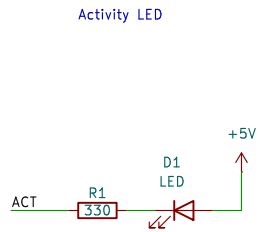

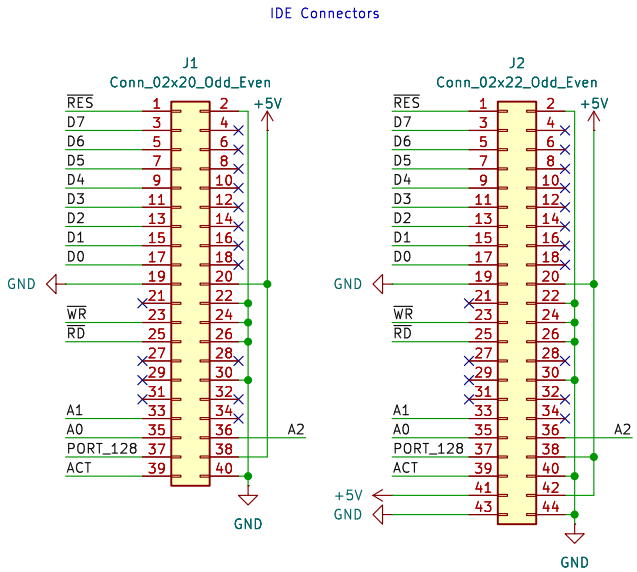

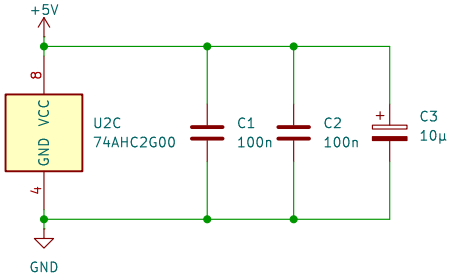

Simple IDE Bus Interface

Synthron

Sheet: /Direct IDE/
File: IDE-Simple.kicad_sch

Title: S65xx Computer System

Size: A4	Date: 2024-06-30	**Rev: 1.0**
KiCad E.D.A. 8.0.4		Id: 11/17

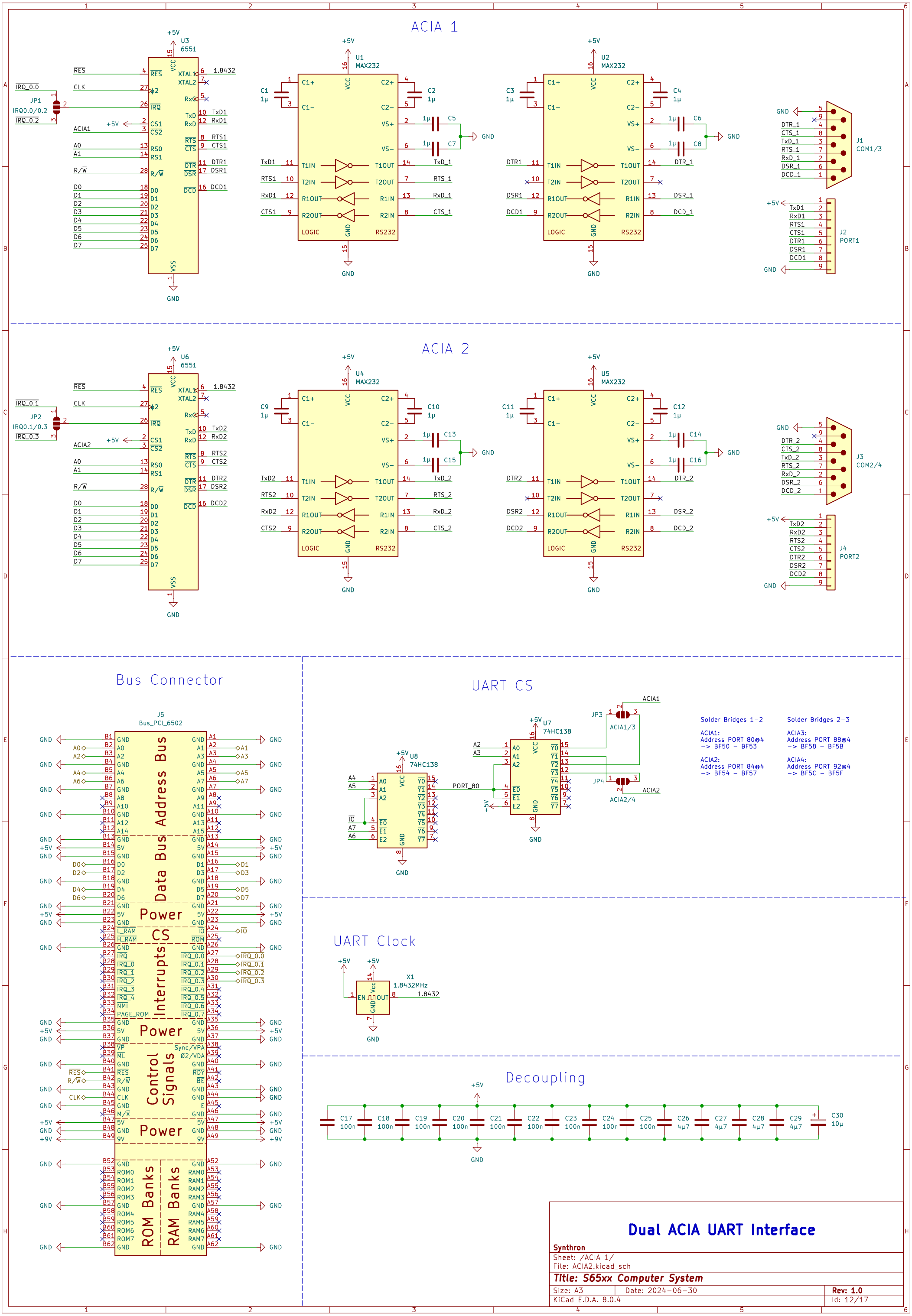

Dual ACIA UART Interface

Synthron

Sheet: /ACIA 1/
File: ACIA2.kicad_sch

Title: S65xx Computer System

Size: A3	Date: 2024-06-30	Rev: 1.0
KiCad E.D.A. 8.0.4		Id: 12/17

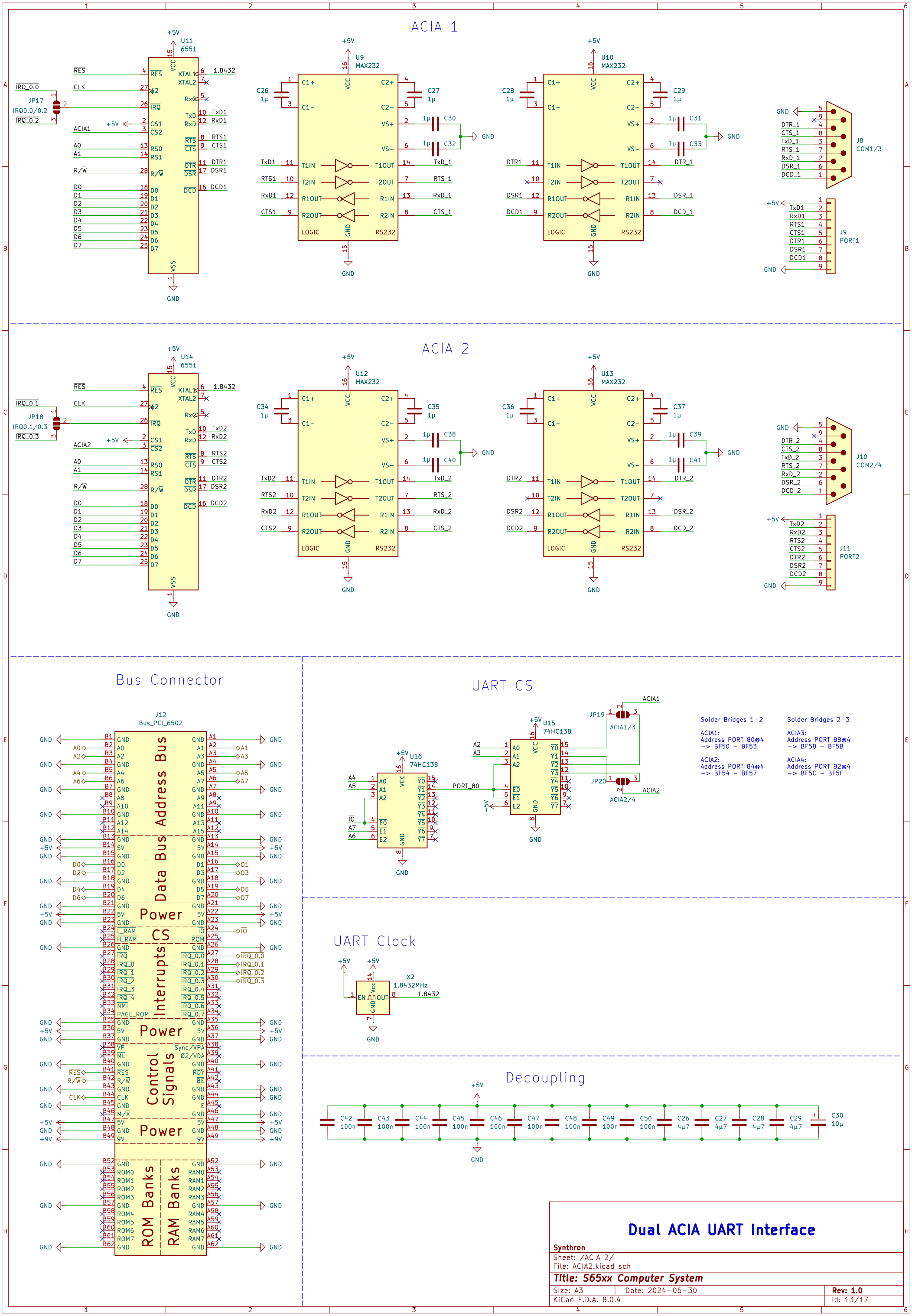

Dual ACIA UART Interface

Synthron

Sheet: /ACIA 2/

File: ACIA2.kicad_sch

Title: S65xx Computer System

Size: A3	Date: 2024-06-30	Rev: 1.0
KiCad E.D.A. 8.0.4		Id: 13/17

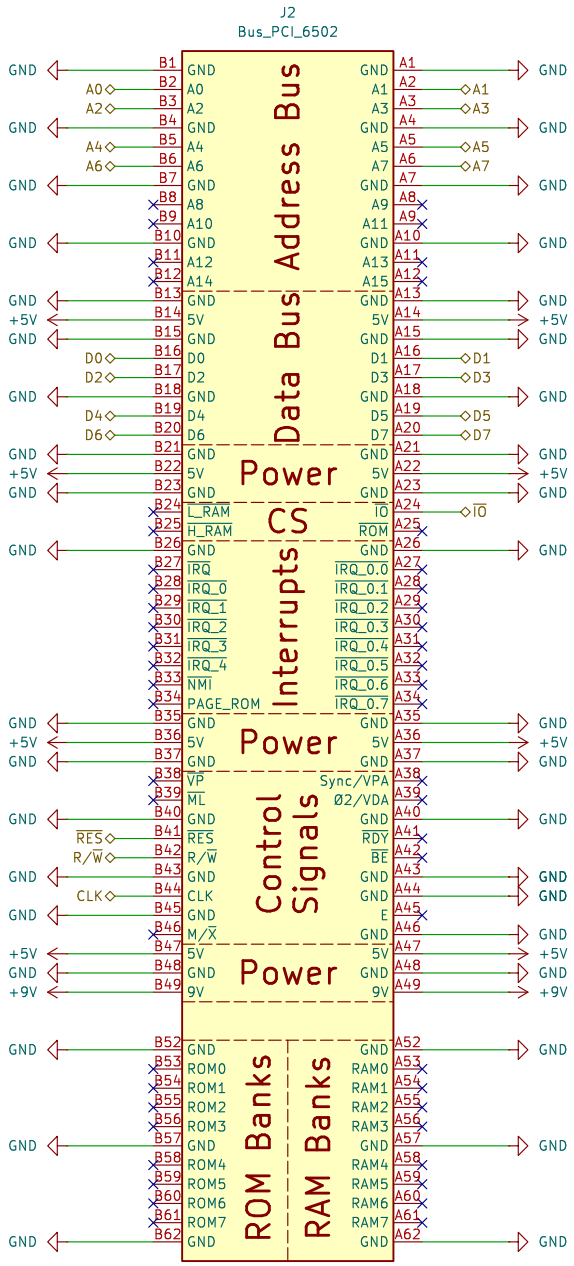

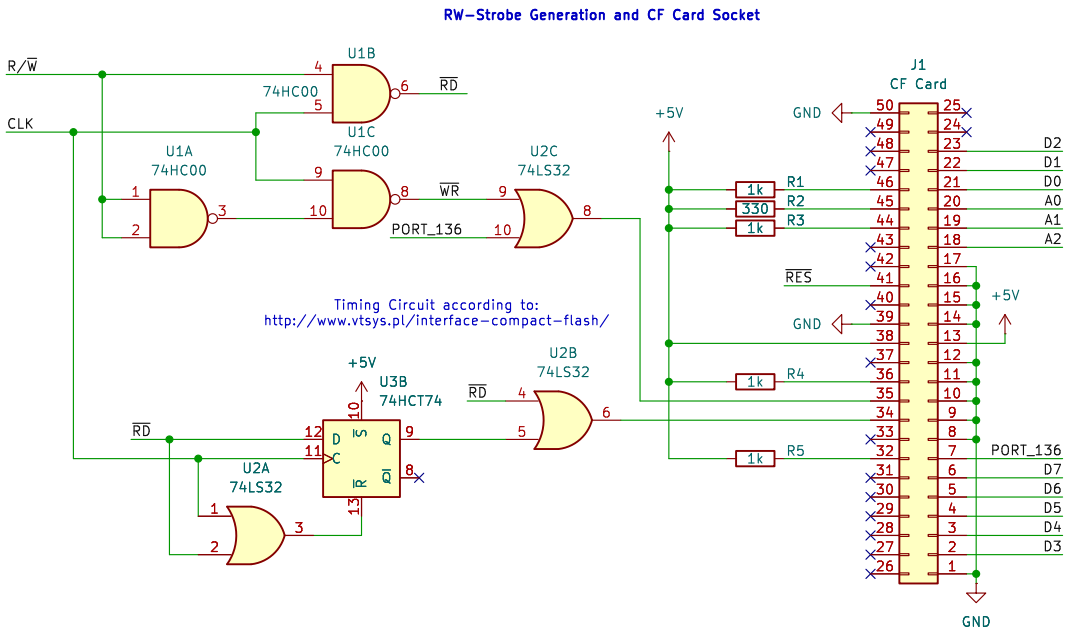

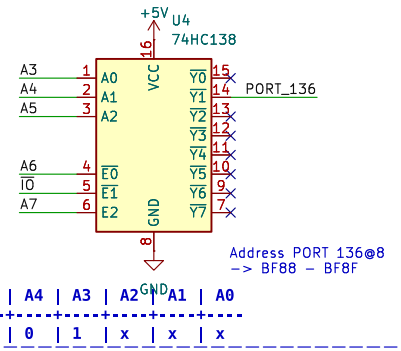

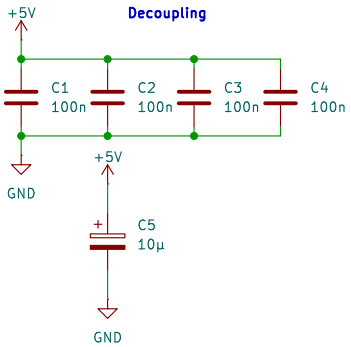

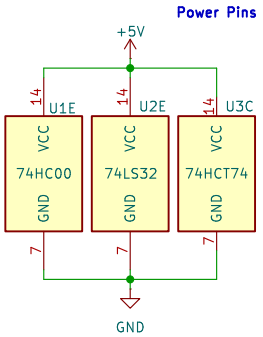

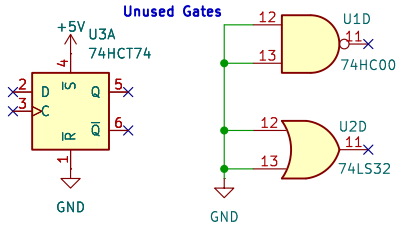

CF Card Interface

Synthron

Sheet: /CF Card/

File: CF.kicad_sch

Title: S65xx Computer System

Size: A4	Date: 2024-06-30	Rev: 1.0
KiCad E.D.A. 8.0.4		Id: 14/17

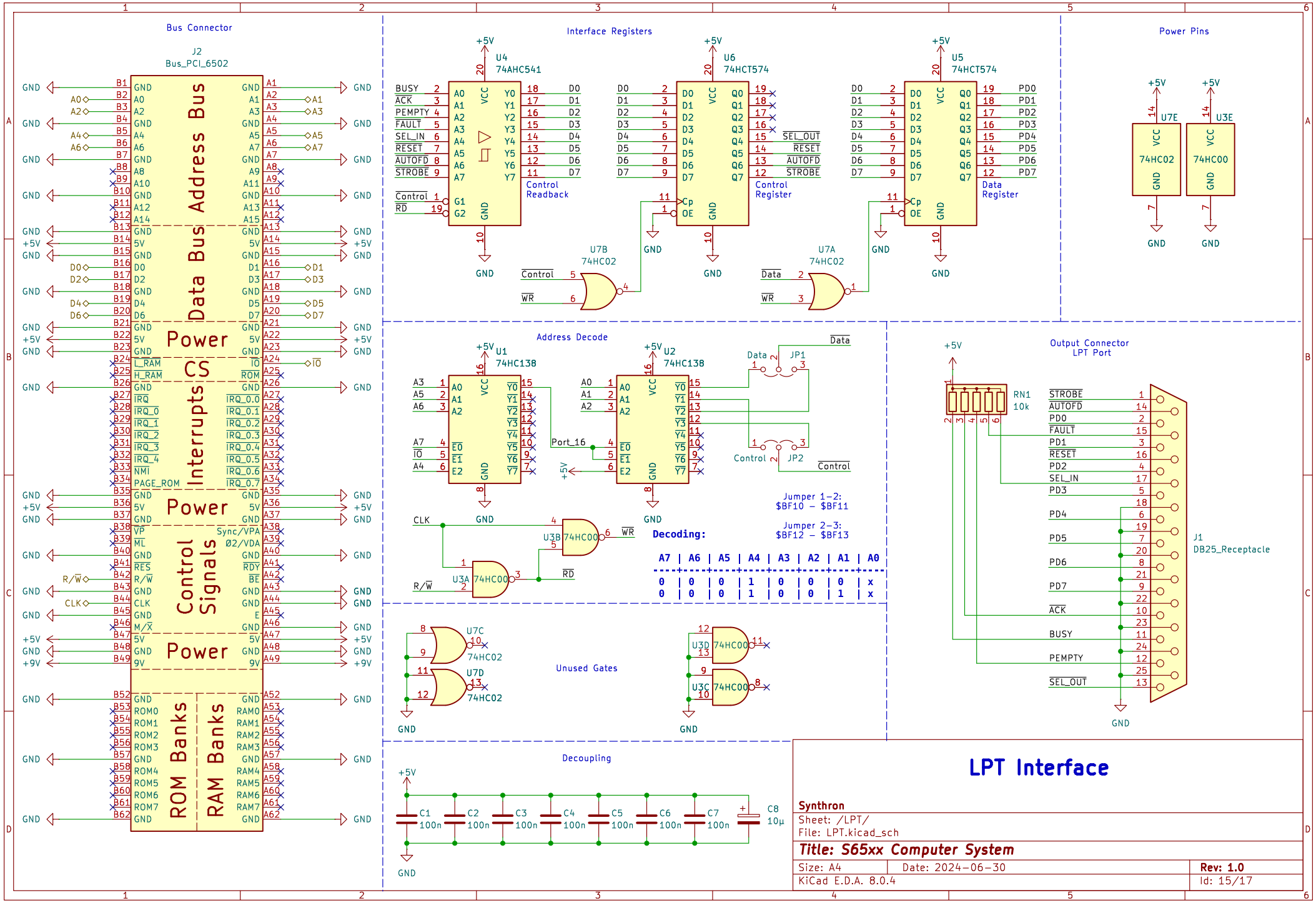
Bus Connector
J2
Bus_PCI_6502
Address Bus
Data Bus
Power
CS
Interrupts
Power
Control Signals
Power
ROM Banks
RAM Banks
Interface Registers
U4
74AHC541
Control Readback
U6
74HCT574
Control Register
U5
74HCT574
Data Register
U7B
74HC02
U7A
74HC02
Power Pins
U7E
74HC02
U3E
74HC00
Address Decode
U1
74HC138
U2
74HC138
JP1
JP2
U3B
74HC00
U3A
74HC00
Jumper 1–2:
$BF10 – $BF11
Jumper 2–3:
$BF12 – $BF13
Decoding:
A7 | A6 | A5 | A4 | A3 | A2 | A1 | A0
0 | 0 | 0 | 1 | 0 | 0 | 0 | x
0 | 0 | 0 | 1 | 0 | 0 | 1 | x
Output Connector
LPT Port
RN1
10k
J1
DB25_Receptacle
Unused Gates
U7C
74HC02
U7D
74HC02
U3D
74HC00
U3C
74HC00
Decoupling
C1 100n
C2 100n
C3 100n
C4 100n
C5 100n
C6 100n
C7 100n
C8 10µ
LPT Interface
Synthron
Sheet: /LPT/
File: LPT.kicad_sch
Title: S65xx Computer System
Size: A4
Date: 2024-06-30
Rev: 1.0
KiCad E.D.A. 8.0.4
Id: 15/17

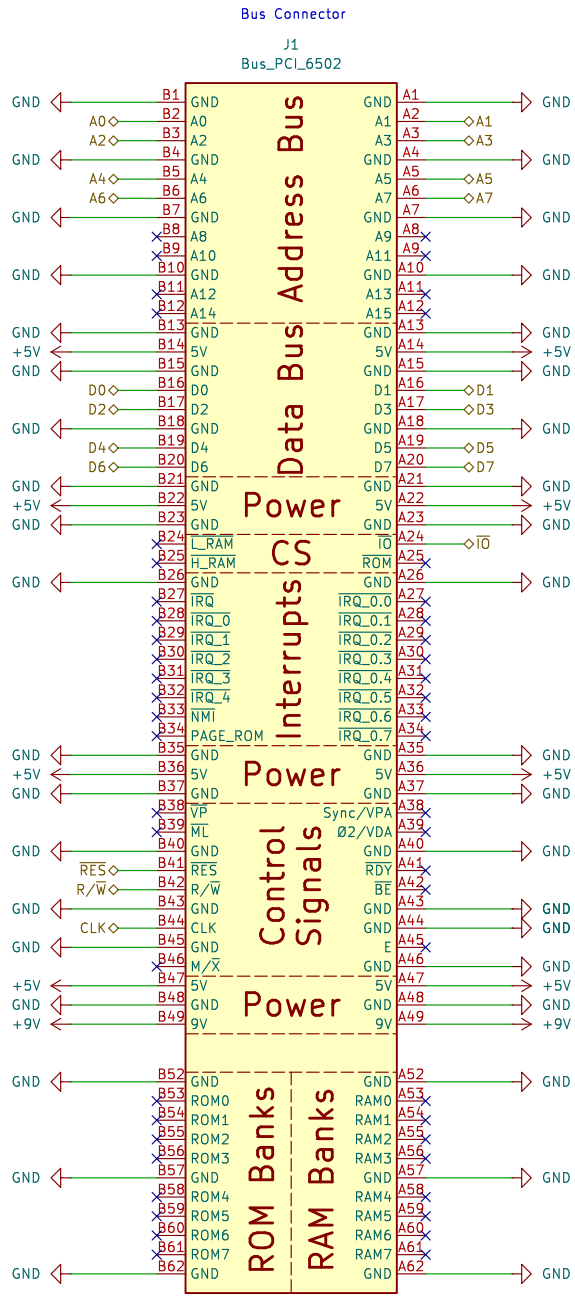

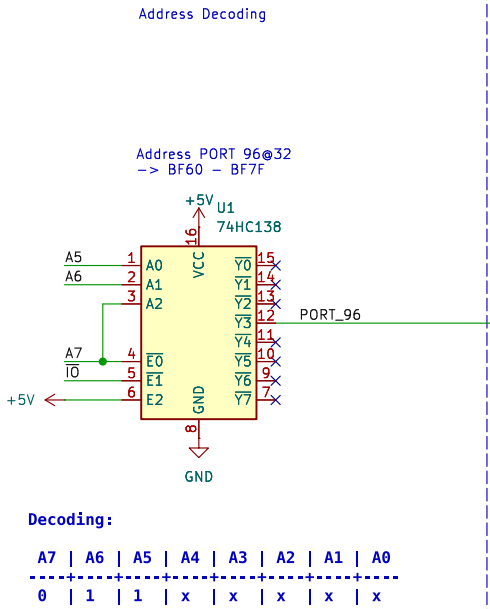

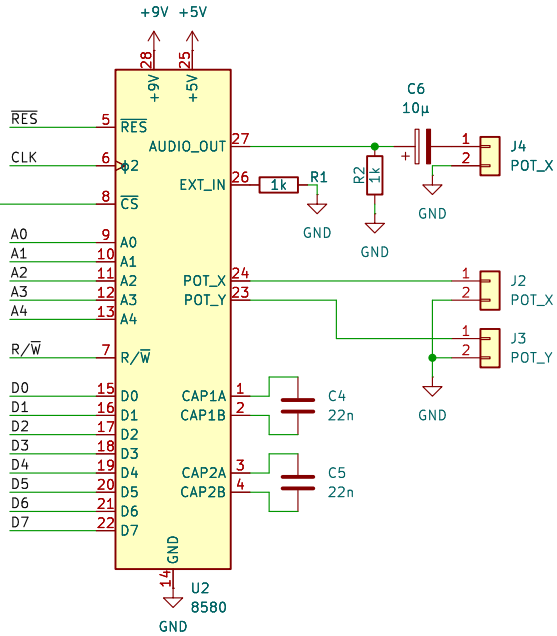

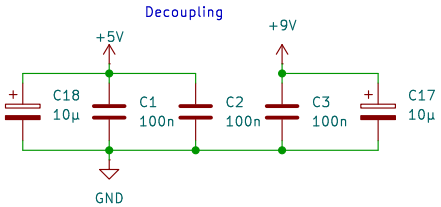

Synthron
Sheet: /SID 8580/
File: SID.kicad_sch

Title: S65xx Computer System

Size: A4	Date: 2024-06-30	Rev: 1.0
KiCad E.D.A. 8.0.4		Id: 16/17

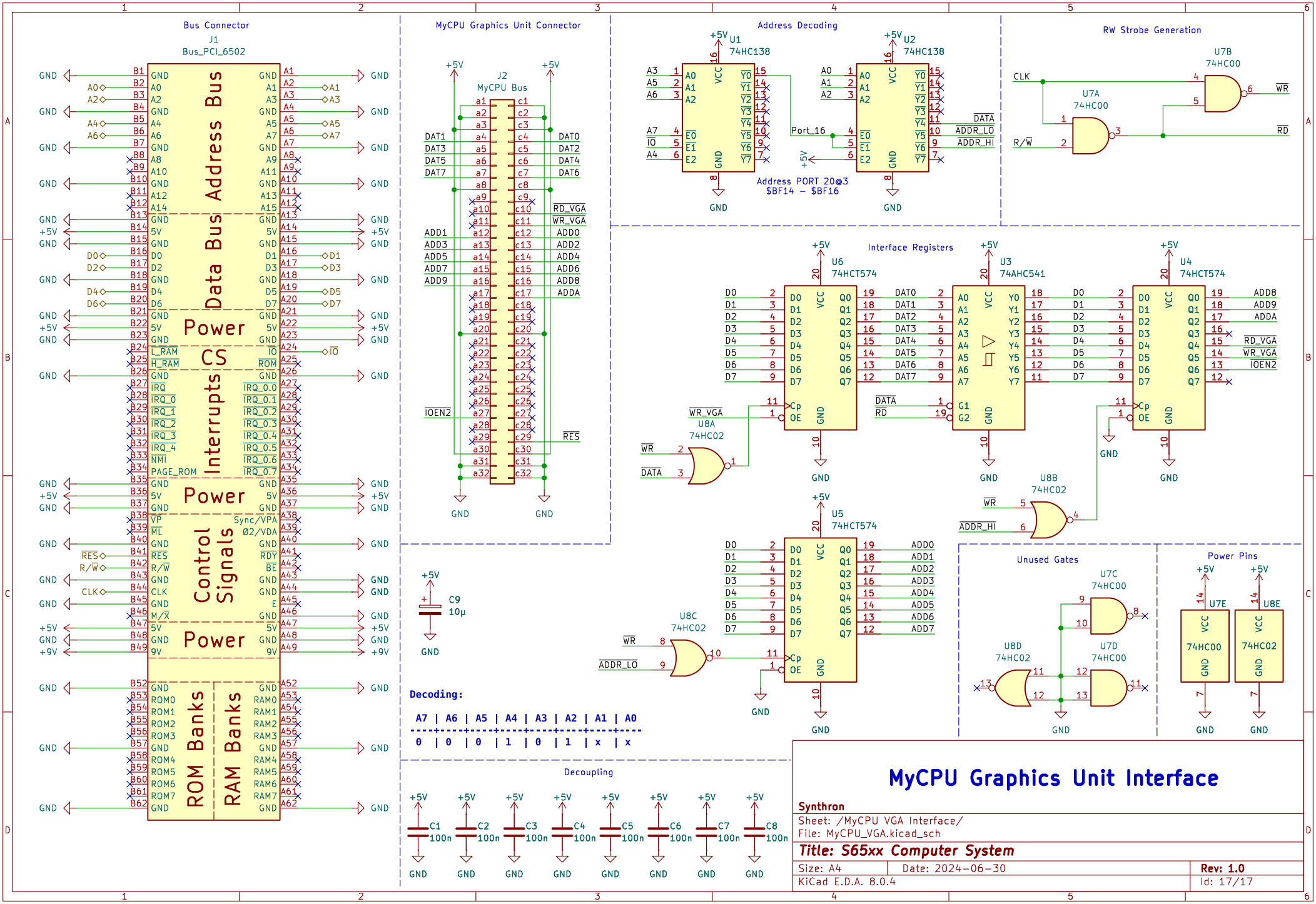
Bus Connector
J1
Bus_PCI_6502
Address Bus
Data Bus
Power
CS
Interrupts
Power
Control Signals
Power
ROM Banks
RAM Banks
MyCPU Graphics Unit Connector
J2
MyCPU Bus
Address Decoding
U1
74HC138
U2
74HC138
Port_16
Address PORT 20@3
$BF14 – $BF16
RW Strobe Generation
U7B
74HC00
U7A
74HC00
Interface Registers
U6
74HCT574
U3
74AHC541
U4
74HCT574
U8A
74HC02
U8B
74HC02
U5
74HCT574
U8C
74HC02
C9
10µ
Decoding:
A7 | A6 | A5 | A4 | A3 | A2 | A1 | A0
0 | 0 | 0 | 1 | 0 | 1 | x | x
Unused Gates
U7C
74HC00
U8D
74HC02
U7D
74HC00
Power Pins
U7E
74HC00
U8E
74HC02
Decoupling
C1 100n
C2 100n
C3 100n
C4 100n
C5 100n
C6 100n
C7 100n
C8 100n
MyCPU Graphics Unit Interface
Synthron
Sheet: /MyCPU VGA Interface/
File: MyCPU_VGA.kicad_sch
Title: S65xx Computer System
Size: A4
Date: 2024-06-30
Rev: 1.0
KiCad E.D.A. 8.0.4
Id: 17/17