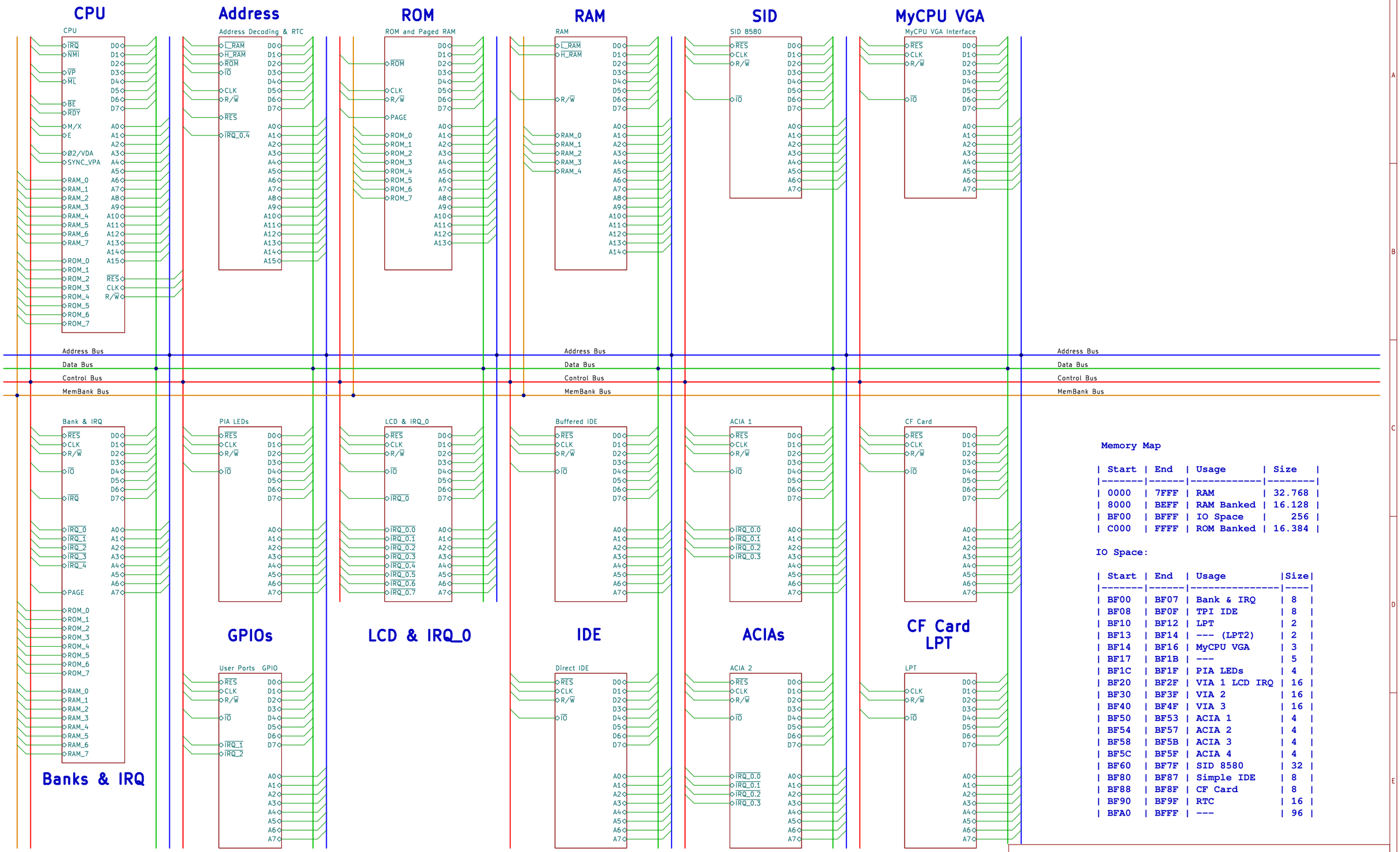

Memory Map

Start	End	Usage	Size
0000	7FFF	RAM	32.768
8000	BEFF	RAM Banked	16.128
BF00	BFFF	IO Space	256
C000	FFFF	ROM Banked	16.384

IO Space:

Start	End	Usage	Size
BF00	BF07	Bank & IRQ	8
BF08	BF0F	TPI IDE	8
BF10	BF12	LPT	2
BF13	BF14	--- (LPT2)	2
BF14	BF16	MyCPU VGA	3
BF17	BF1B	---	5
BF1C	BF1F	PIA LEDs	4
BF20	BF2F	VIA 1 LCD IRQ	16
BF30	BF3F	VIA 2	16
BF40	BF4F	VIA 3	16
BF50	BF53	ACIA 1	4
BF54	BF57	ACIA 2	4
BF58	BF5B	ACIA 3	4
BF5C	BF5F	ACIA 4	4
BF60	BF7F	SID 8580	32
BF80	BF87	Simple IDE	8
BF88	BF8F	CF Card	8
BF90	BF9F	RTC	16
BFA0	BFFF	---	96

System Overview

Synthron
Sheet: /
File: overview.kicad_sch

Title: S65xx Computer System Overview

Size: A3	Date: 2024-06-30	Rev: 1.1
KiCad E.D.A. 8.0.3		Id: 1/17

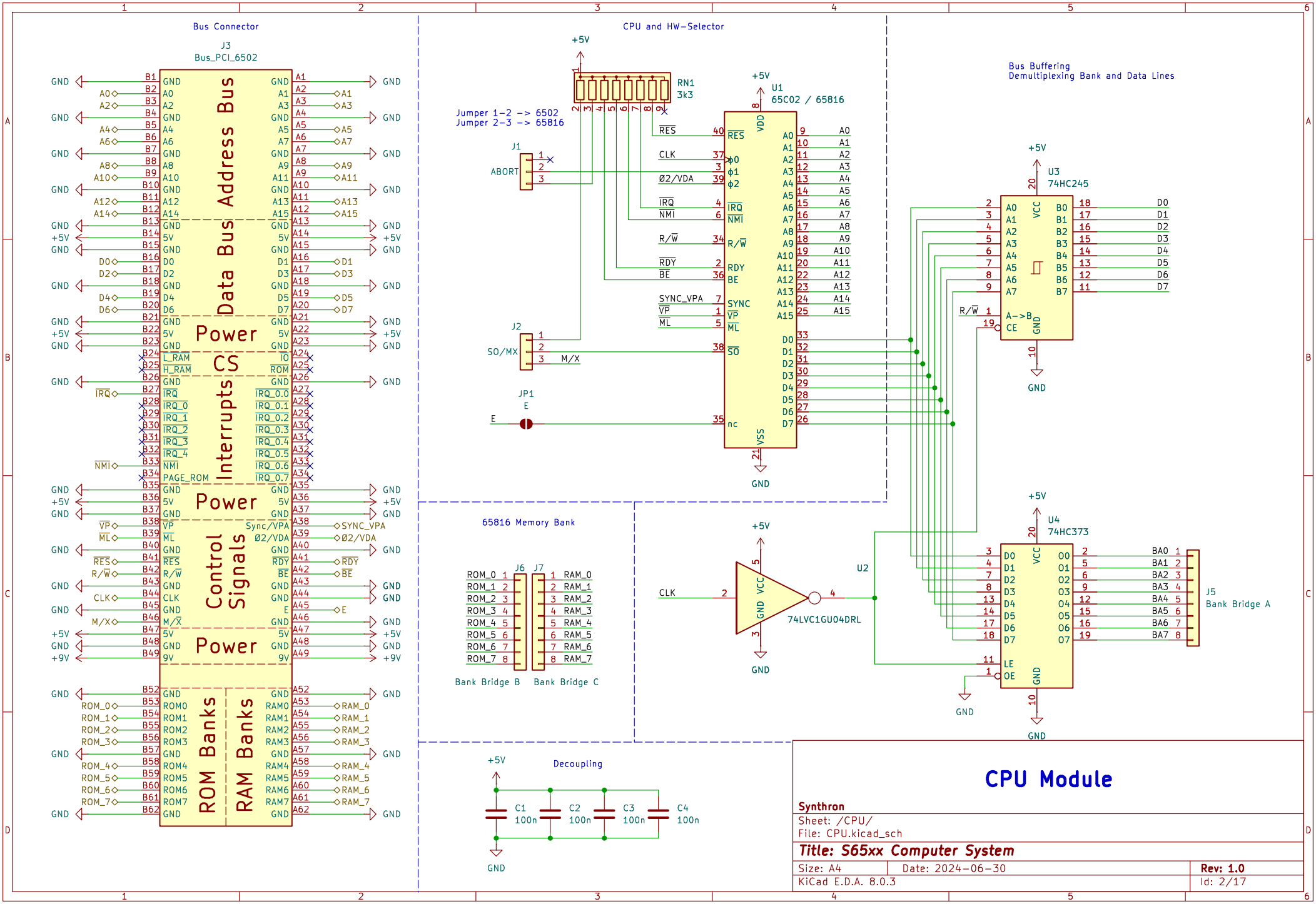
Bus Connector
J3
Bus_PCI_6502
Address Bus
Data Bus
Power
CS
Interrupts
Power
Control Signals
Power
ROM Banks
RAM Banks
CPU and HW-Selector
+5V
RN1
3k3
Jumper 1-2 -> 6502
Jumper 2-3 -> 65816
J1
ABORT
J2
SO/MX
M/X
JP1
E
U1
65C02 / 65816
Bus Buffering
Demultiplexing Bank and Data Lines
U3
74HC245
U4
74HC373
J5
Bank Bridge A
65816 Memory Bank
J6
J7
Bank Bridge B
Bank Bridge C
U2
74LVC1GU04DRL
Decoupling
C1
100n
C2
100n
C3
100n
C4
100n
GND
CPU Module
Synthron
Sheet: /CPU/
File: CPU.kicad_sch
Title: S65xx Computer System
Size: A4
Date: 2024-06-30
Rev: 1.0
KiCad E.D.A. 8.0.3
Id: 2/17

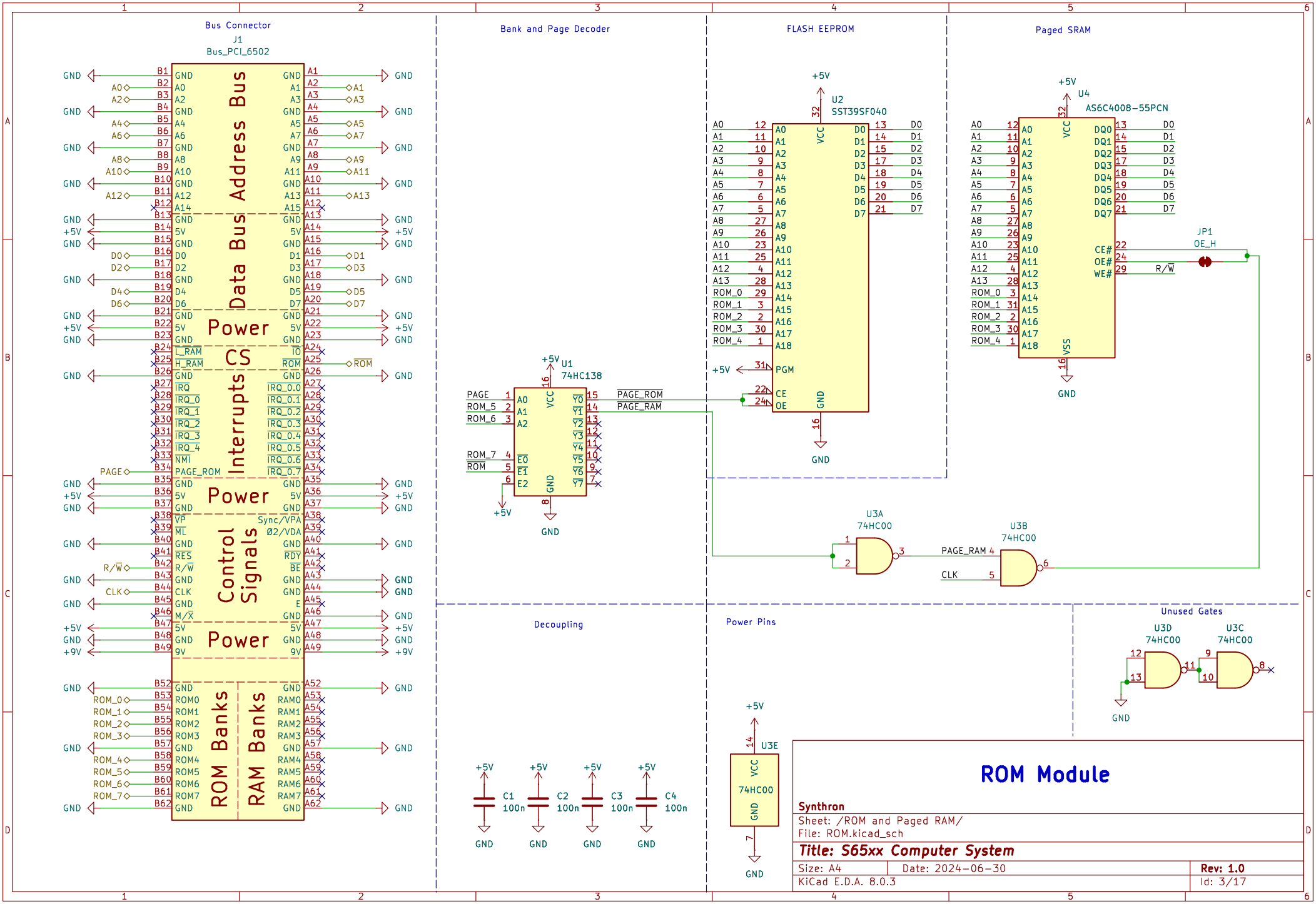
Bus Connector
J1
Bus_PCI_6502
Address Bus
Data Bus
Power
CS
Interrupts
Power
Control Signals
Power
ROM Banks
RAM Banks
Bank and Page Decoder
U1
74HC138
FLASH EEPROM
U2
SST39SF040
Paged SRAM
U4
AS6C4008-55PCN
JP1
OE_H
U3A
74HC00
U3B
74HC00
Decoupling
C1
100n
C2
100n
C3
100n
C4
100n
Power Pins
U3E
74HC00
Unused Gates
U3D
74HC00
U3C
74HC00
ROM Module
Synthron
Sheet: /ROM and Paged RAM/
File: ROM.kicad_sch
Title: S65xx Computer System
Size: A4
Date: 2024-06-30
Rev: 1.0
KiCad E.D.A. 8.0.3
Id: 3/17

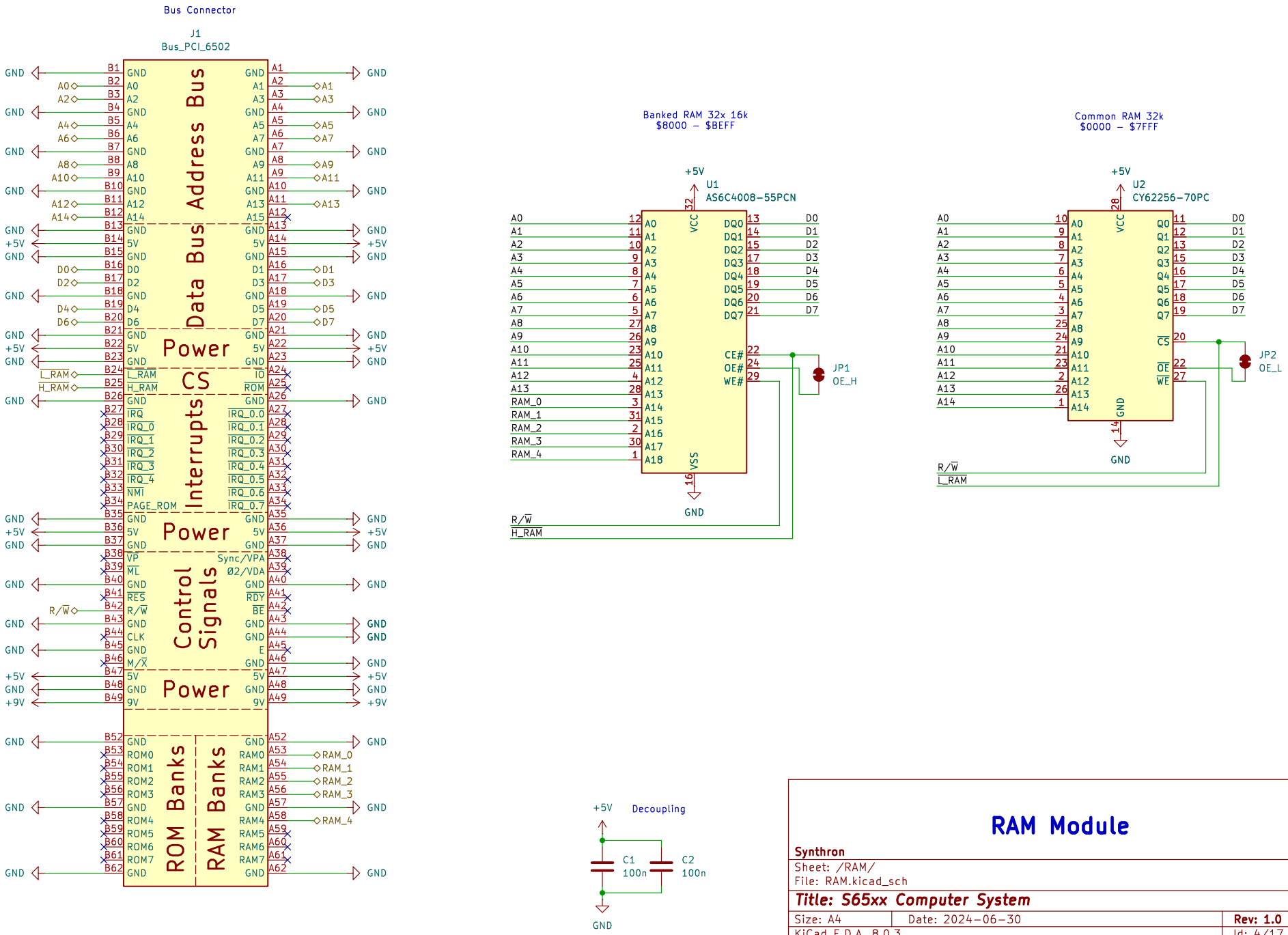
Bus Connector
J1
Bus_PCI_6502
Address Bus
Data Bus
Power
CS
Interrupts
Power
Control Signals
Power
ROM Banks
RAM Banks
Banked RAM 32x 16k
$8000 – $BEFF
U1
AS6C4008-55PCN
JP1
OE_H
Common RAM 32k
$0000 – $7FFF
U2
CY62256-70PC
JP2
OE_L
Decoupling
C1
100n
C2
100n
RAM Module
Synthron
Sheet: /RAM/
File: RAM.kicad_sch
Title: S65xx Computer System
Size: A4
Date: 2024-06-30
Rev: 1.0
KiCad E.D.A. 8.0.3
Id: 4/17

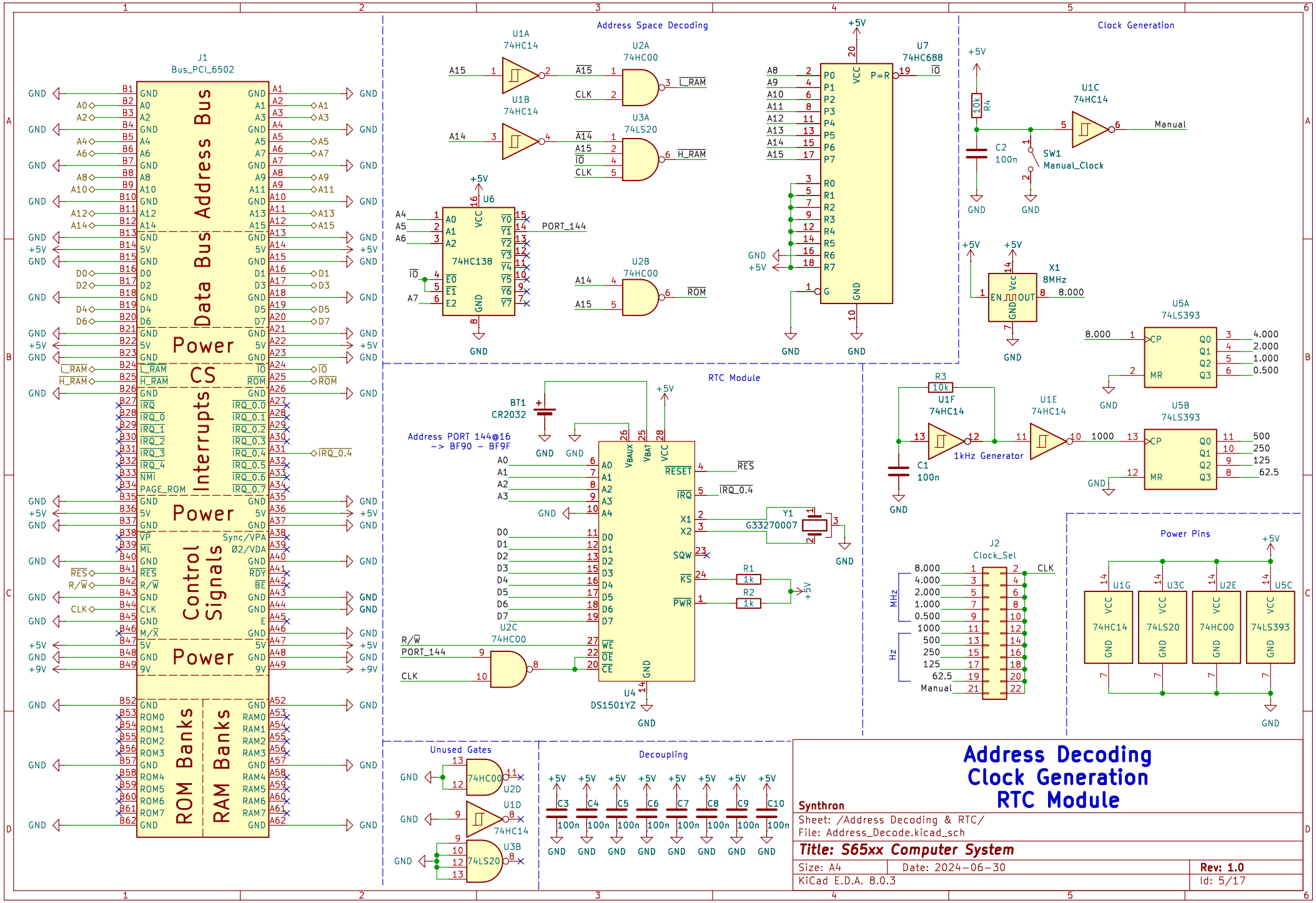
J1
Bus_PCI_6502
Address Bus
Data Bus
Power
CS
Interrupts
Power
Control Signals
Power
ROM Banks
RAM Banks
Address Space Decoding
U1A 74HC14
U1B 74HC14
U2A 74HC00
U3A 74LS20
U6 74HC138
U2B 74HC00
U7 74HC688
PORT_144
L_RAM
H_RAM
ROM
Clock Generation
U1C 74HC14
Manual
SW1 Manual_Clock
C2 100n
R4 10k
X1 8MHz
U5A 74LS393
U5B 74LS393
R3 10k
U1F 74HC14
U1E 74HC14
1kHz Generator
C1 100n
RTC Module
BT1 CR2032
Address PORT 144@16
-> BF90 - BF9F
U4 DS1501YZ
Y1 G33270007
R1 1k
R2 1k
U2C 74HC00
J2 Clock_Sel
MHz
Hz
Manual
Power Pins
U1G 74HC14
U3C 74LS20
U2E 74HC00
U5C 74LS393
Unused Gates
U2D 74HC00
U1D 74HC14
U3B 74LS20
Decoupling
C3 100n
C4 100n
C5 100n
C6 100n
C7 100n
C8 100n
C9 100n
C10 100n
Synthron
Address Decoding
Clock Generation
RTC Module
Sheet: /Address Decoding & RTC/
File: Address_Decode.kicad_sch
Title: S65xx Computer System
Size: A4
Date: 2024-06-30
Rev: 1.0
KiCad E.D.A. 8.0.3
Id: 5/17

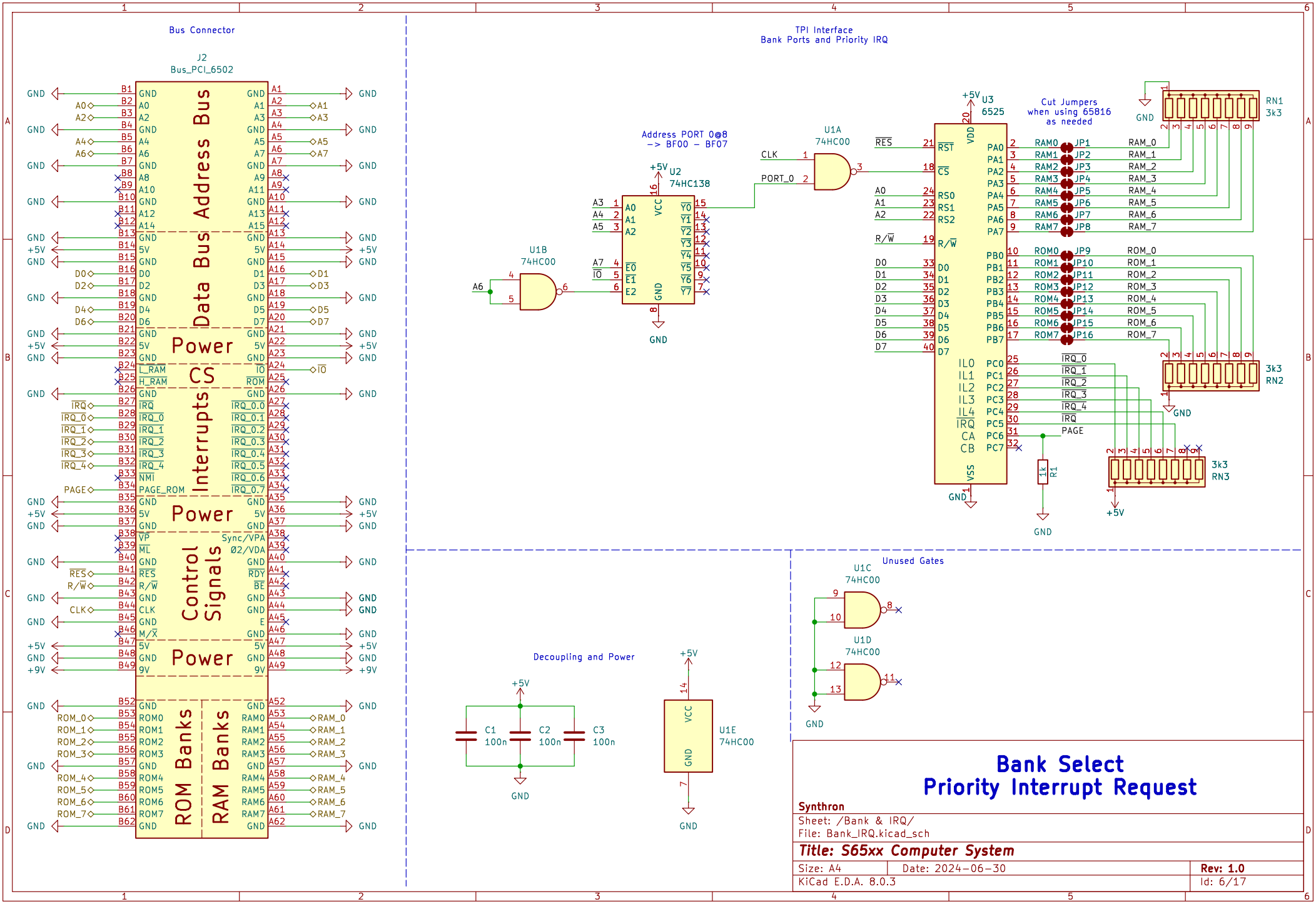
Bus Connector
J2
Bus_PCI_6502
Address Bus
Data Bus
Power
CS
Interrupts
Power
Control Signals
Power
ROM Banks
RAM Banks
TPI Interface
Bank Ports and Priority IRQ
Address PORT 0@8
-> BF00 - BF07
U2
74HC138
U1A
74HC00
U1B
74HC00
U3
6525
Cut Jumpers
when using 65816
as needed
RN1
3k3
RN2
3k3
RN3
3k3
R1
1k
Unused Gates
U1C
74HC00
U1D
74HC00
Decoupling and Power
C1
100n
C2
100n
C3
100n
U1E
74HC00
Bank Select
Priority Interrupt Request
Synthron
Sheet: /Bank & IRQ/
File: Bank_IRQ.kicad_sch
Title: S65xx Computer System
Size: A4
Date: 2024-06-30
Rev: 1.0
KiCad E.D.A. 8.0.3
Id: 6/17

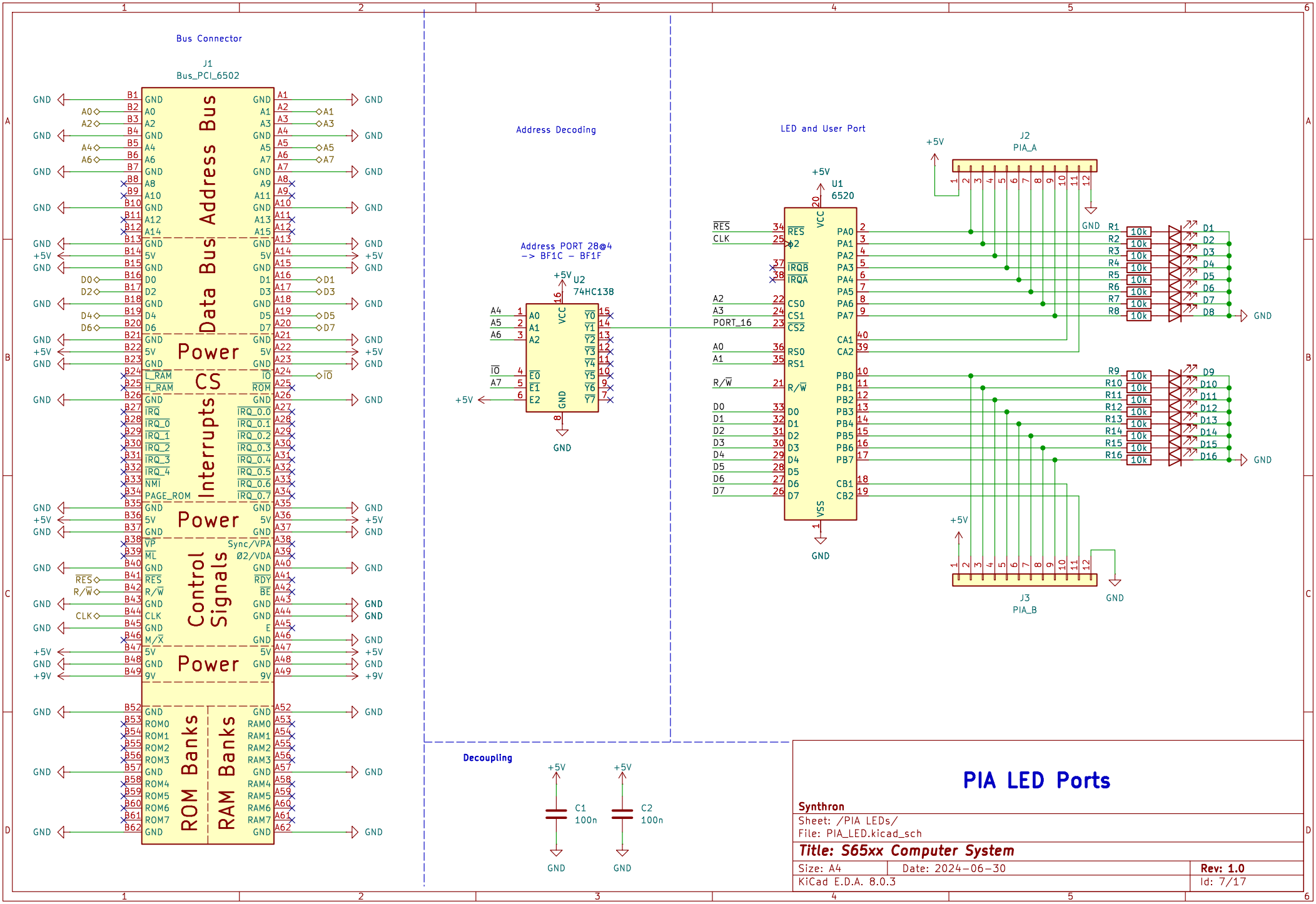
Bus Connector
J1
Bus_PCI_6502
Address Bus
Data Bus
Power
CS
Interrupts
Power
Control Signals
Power
ROM Banks
RAM Banks
Address Decoding
Address PORT 28@4
-> BF1C - BF1F
U2
74HC138
LED and User Port
J2
PIA_A
U1
6520
J3
PIA_B
Decoupling
C1
100n
C2
100n
PIA LED Ports
Synthron
Sheet: /PIA LEDs/
File: PIA_LED.kicad_sch
Title: S65xx Computer System
Size: A4
Date: 2024-06-30
Rev: 1.0
KiCad E.D.A. 8.0.3
Id: 7/17

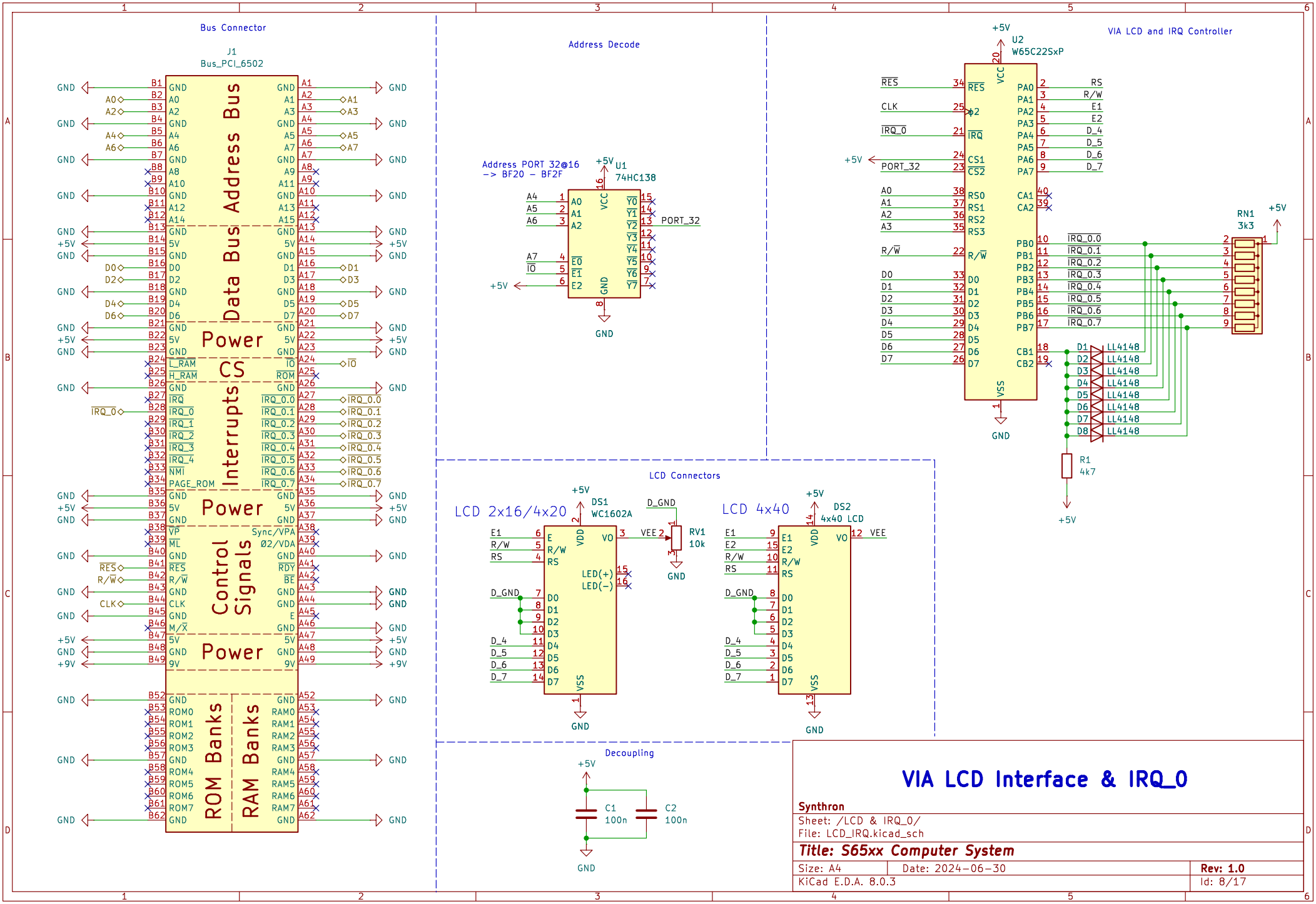
Bus Connector
J1
Bus_PCI_6502
Address Bus
Data Bus
Power
CS
Interrupts
Control Signals
ROM Banks
RAM Banks
Address Decode
Address PORT 32@16
-> BF20 - BF2F
U1
74HC138
PORT_32
VIA LCD and IRQ Controller
U2
W65C22SxP
RN1
3k3
R1
4k7
LL4148
LCD Connectors
LCD 2x16/4x20
DS1
WC1602A
RV1
10k
LCD 4x40
DS2
4x40 LCD
Decoupling
C1
100n
C2
100n
VIA LCD Interface & IRQ_0
Synthron
Sheet: /LCD & IRQ_0/
File: LCD_IRQ.kicad_sch
Title: S65xx Computer System
Size: A4
Date: 2024-06-30
Rev: 1.0
KiCad E.D.A. 8.0.3
Id: 8/17

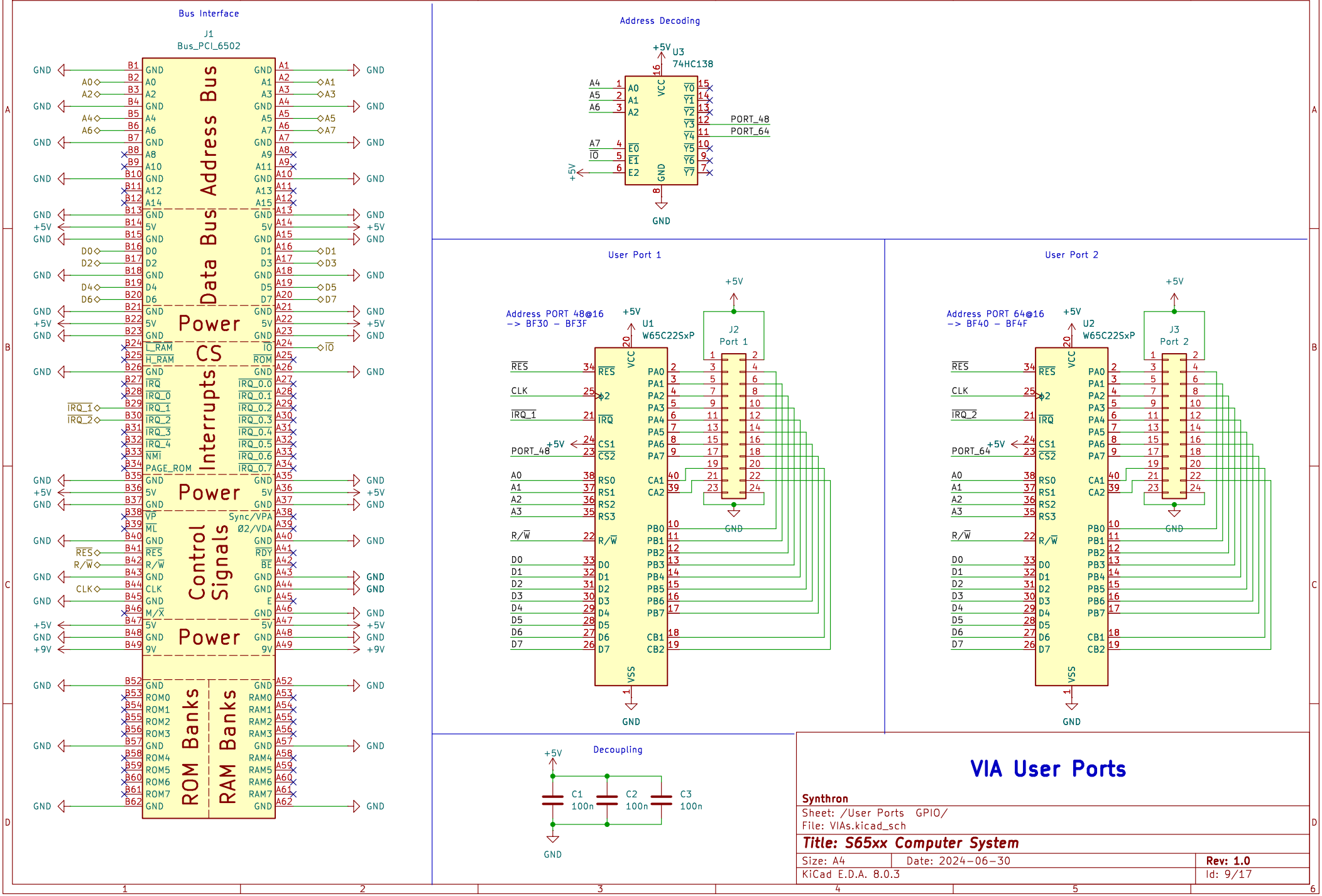
Bus Interface
J1
Bus_PCI_6502
Address Bus
Data Bus
Power
CS
Interrupts
Power
Control Signals
Power
ROM Banks
RAM Banks
Address Decoding
U3
74HC138
PORT_48
PORT_64
User Port 1
Address PORT 48@16
-> BF30 - BF3F
U1
W65C22SxP
J2
Port 1
User Port 2
Address PORT 64@16
-> BF40 - BF4F
U2
W65C22SxP
J3
Port 2
Decoupling
C1
100n
C2
100n
C3
100n
VIA User Ports
Synthron
Sheet: /User Ports GPIO/
File: VIAs.kicad_sch
Title: S65xx Computer System
Size: A4
Date: 2024-06-30
Rev: 1.0
KiCad E.D.A. 8.0.3
Id: 9/17

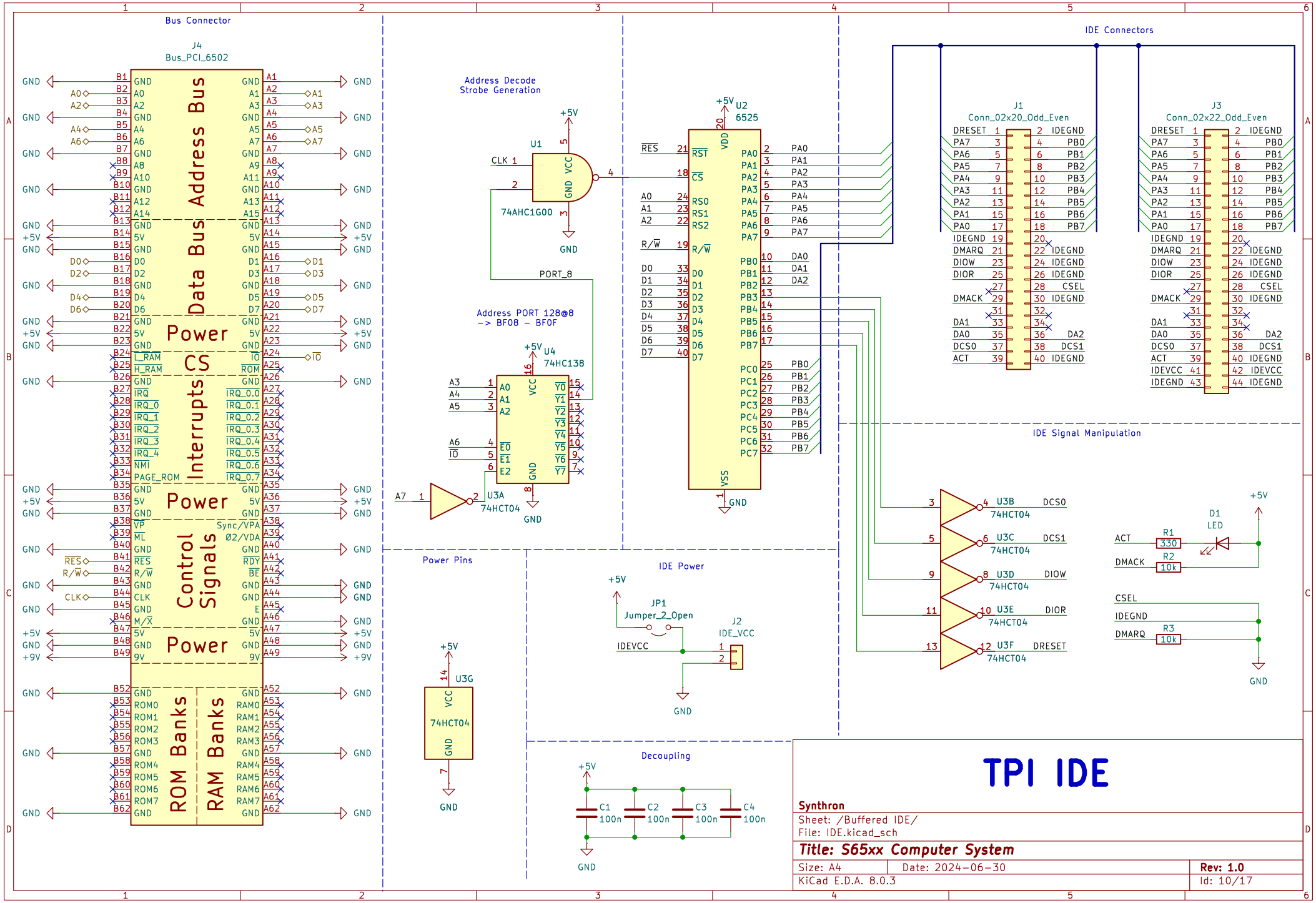
Bus Connector
J4
Bus_PCI_6502
Address Bus
Data Bus
Power
CS
Interrupts
Power
Control Signals
Power
ROM Banks
RAM Banks
Address Decode Strobe Generation
U1
74AHC1G00
PORT_8
Address PORT 128@8
-> BF08 - BF0F
U4
74HC138
U3A
74HC04
U2
6525
IDE Connectors
J1
Conn_02x20_Odd_Even
J3
Conn_02x22_Odd_Even
IDE Signal Manipulation
U3B
U3C
U3D
U3E
U3F
74HCT04
D1
LED
R1
330
R2
10k
R3
10k
Power Pins
U3G
74HCT04
IDE Power
JP1
Jumper_2_Open
J2
IDE_VCC
Decoupling
C1
C2
C3
C4
100n
TPI IDE
Synthron
Sheet: /Buffered IDE/
File: IDE.kicad_sch
Title: S65xx Computer System
Size: A4
Date: 2024-06-30
Rev: 1.0
KiCad E.D.A. 8.0.3
Id: 10/17

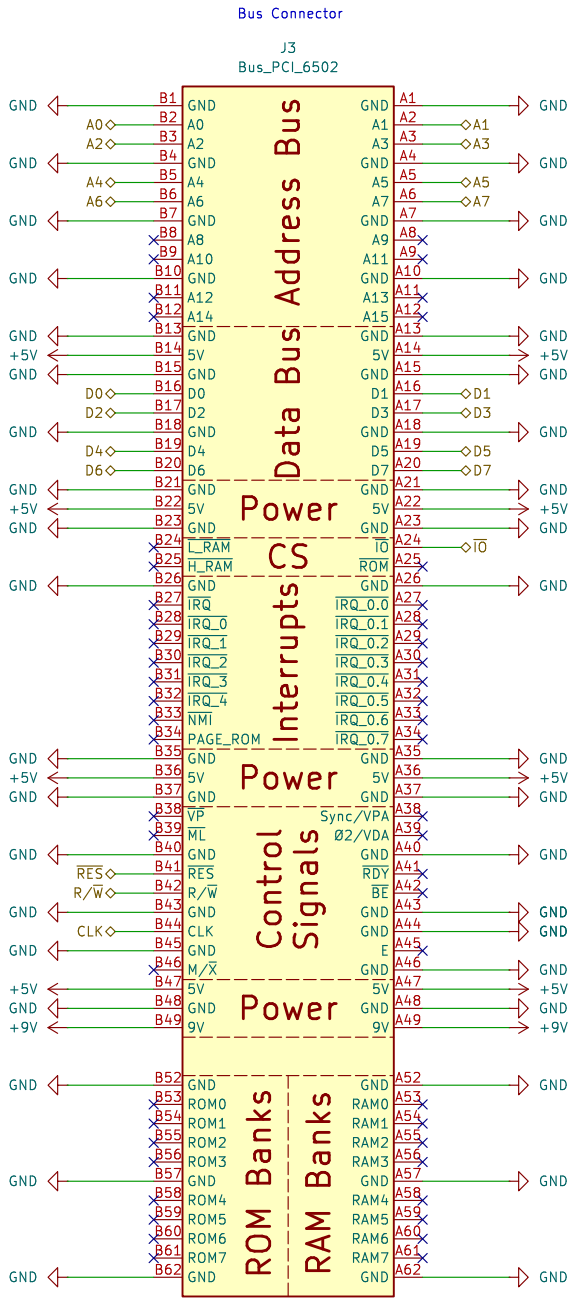

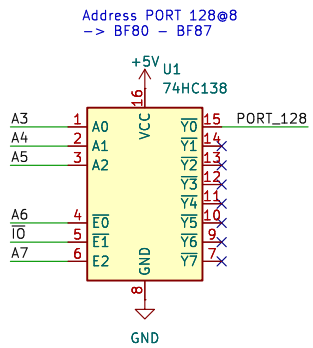

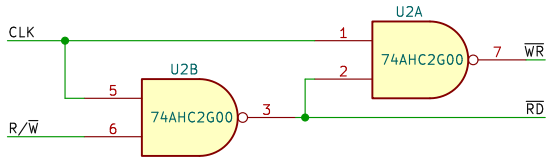

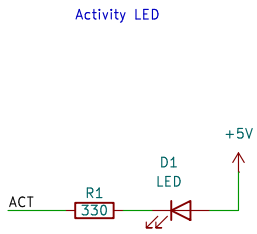

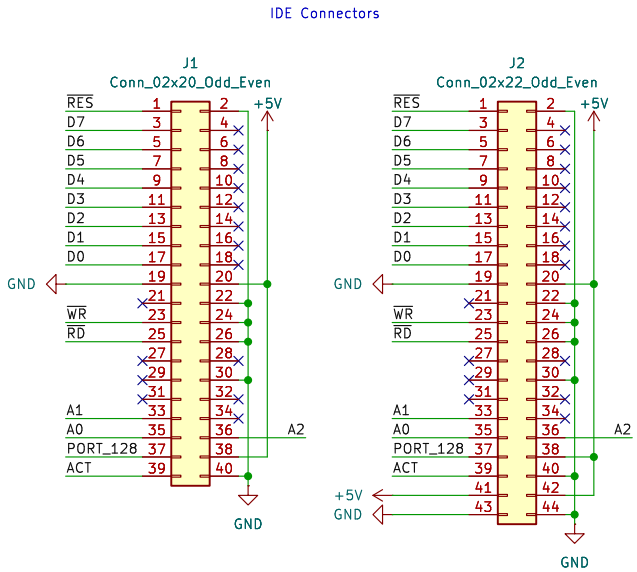

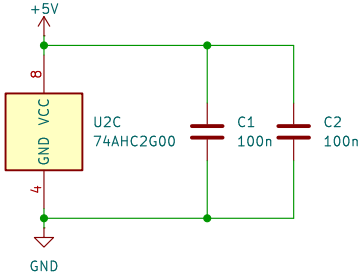

Simple IDE Bus Interface

Synthron

Sheet: /Direct IDE/
File: IDE-Simple.kicad_sch

Title: S65xx Computer System

Size: A4	Date: 2024-06-30	**Rev: 1.0**
KiCad E.D.A. 8.0.3		Id: 11/17

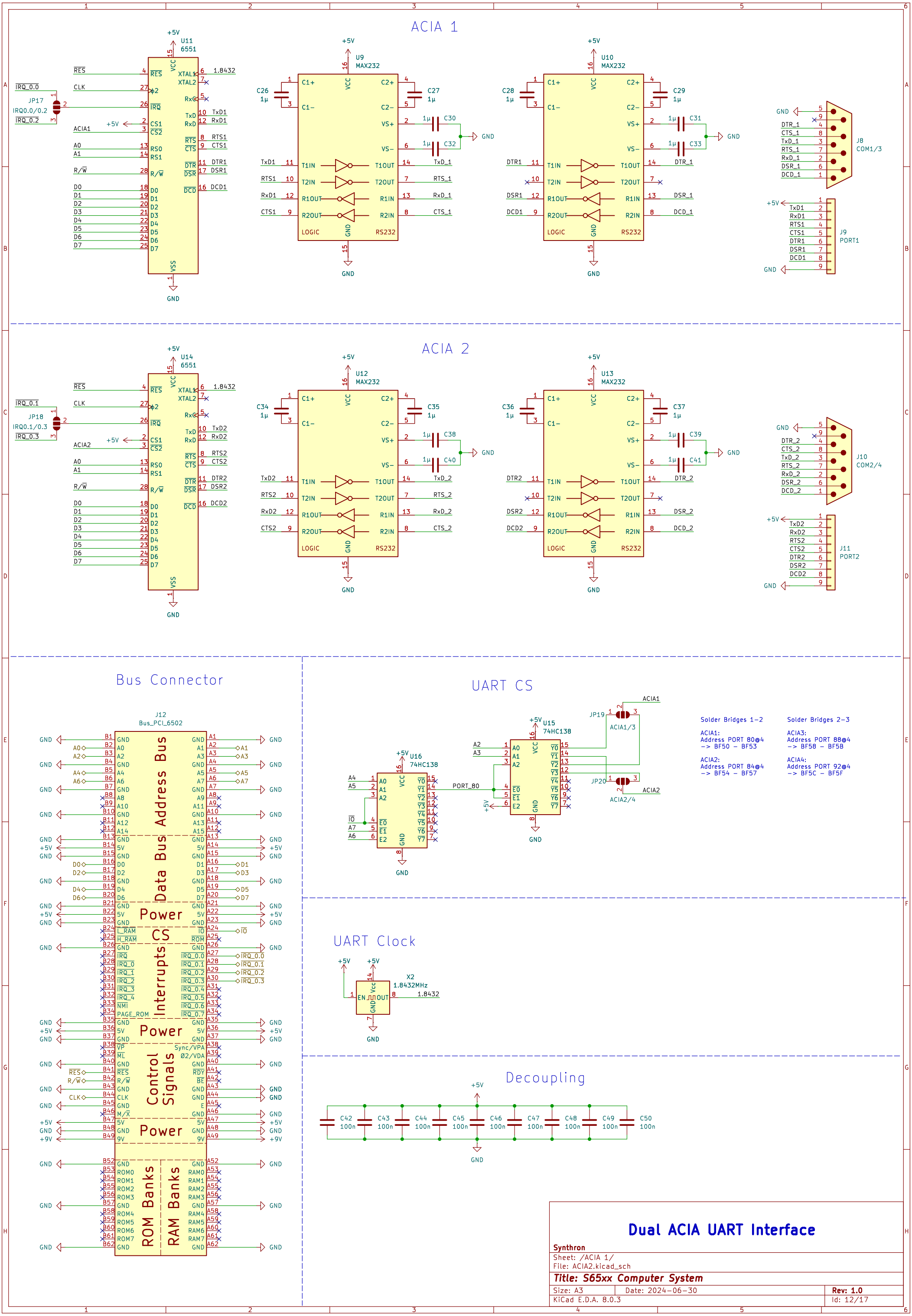
ACIA 1
U11
6551
U9
MAX232
U10
MAX232
J8
COM1/3
J9
PORT1
ACIA 2
U14
6551
U12
MAX232
U13
MAX232
J10
COM2/4
J11
PORT2
Bus Connector
J12
Bus_PCI_6502
Data Bus
Address Bus
Power
CS
Interrupts
Control Signals
ROM Banks
RAM Banks
UART CS
U15
74HC138
U16
74HC138
JP19
JP20
ACIA1/3
ACIA2/4
Solder Bridges 1-2
ACIA1:
Address PORT 80@4
-> BF50 - BF53
ACIA2:
Address PORT 84@4
-> BF54 - BF57
Solder Bridges 2-3
ACIA3:
Address PORT 88@4
-> BF58 - BF5B
ACIA4:
Address PORT 92@4
-> BF5C - BF5F
UART Clock
X2
1.8432MHz
Decoupling
Dual ACIA UART Interface
Synthron
Sheet: /ACIA 1/
File: ACIA2.kicad_sch
Title: S65xx Computer System
Size: A3
Date: 2024-06-30
Rev: 1.0
KiCad E.D.A. 8.0.3
Id: 12/17

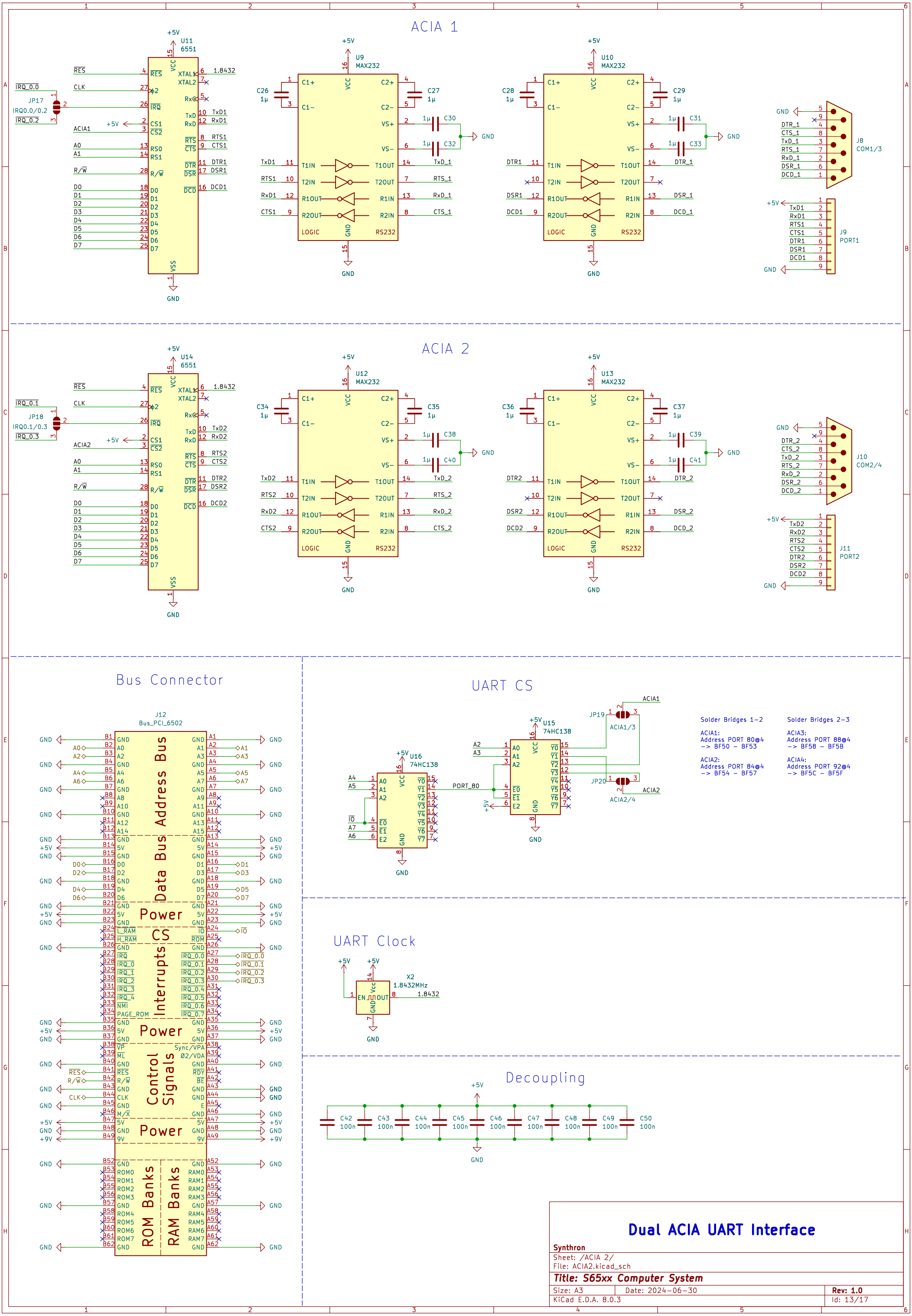
ACIA 1
U11
6551
U9
MAX232
U10
MAX232
J8
COM1/3
J9
PORT1
ACIA 2
U14
6551
U12
MAX232
U13
MAX232
J10
COM2/4
J11
PORT2
Bus Connector
J12
Bus_PCI_6502
Data Bus
Address Bus
Power
CS
Interrupts
Control Signals
ROM Banks
RAM Banks
UART CS
U16
74HC138
U15
74HC138
JP19
JP20
ACIA1/3
ACIA2/4
Solder Bridges 1-2
ACIA1:
Address PORT 80@4
-> BF50 - BF53
ACIA2:
Address PORT 84@4
-> BF54 - BF57
Solder Bridges 2-3
ACIA3:
Address PORT 88@4
-> BF58 - BF5B
ACIA4:
Address PORT 92@4
-> BF5C - BF5F
UART Clock
X2
1.8432MHz
Decoupling
Dual ACIA UART Interface
Synthron
Sheet: /ACIA 2/
File: ACIA2.kicad_sch
Title: S65xx Computer System
Size: A3
Date: 2024-06-30
Rev: 1.0
KiCad E.D.A. 8.0.3
Id: 13/17

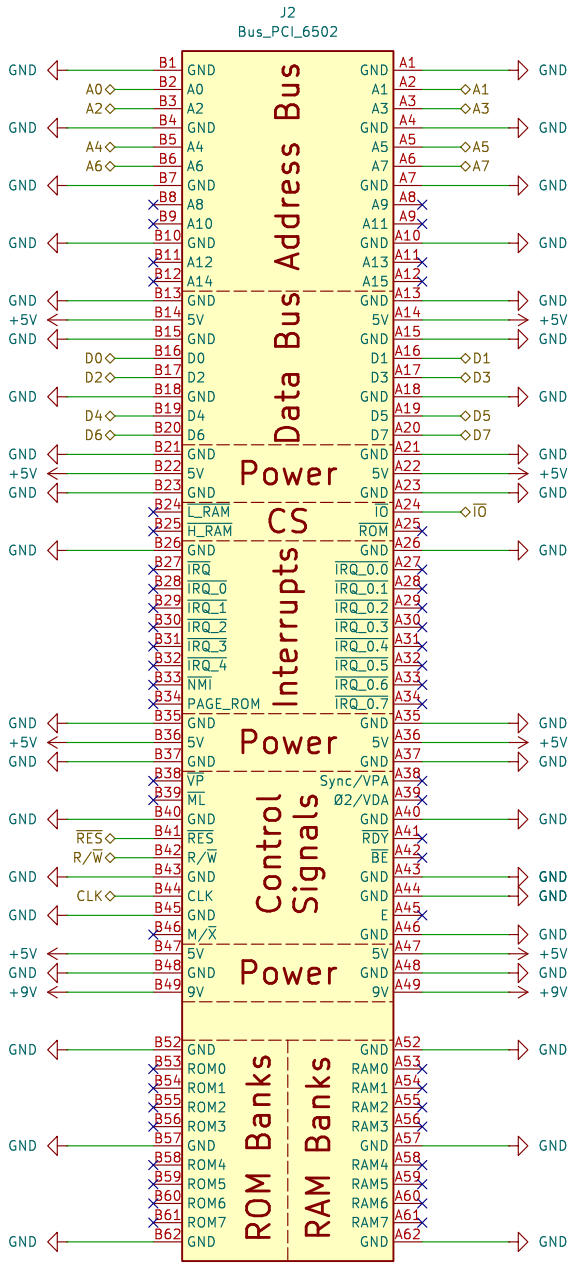

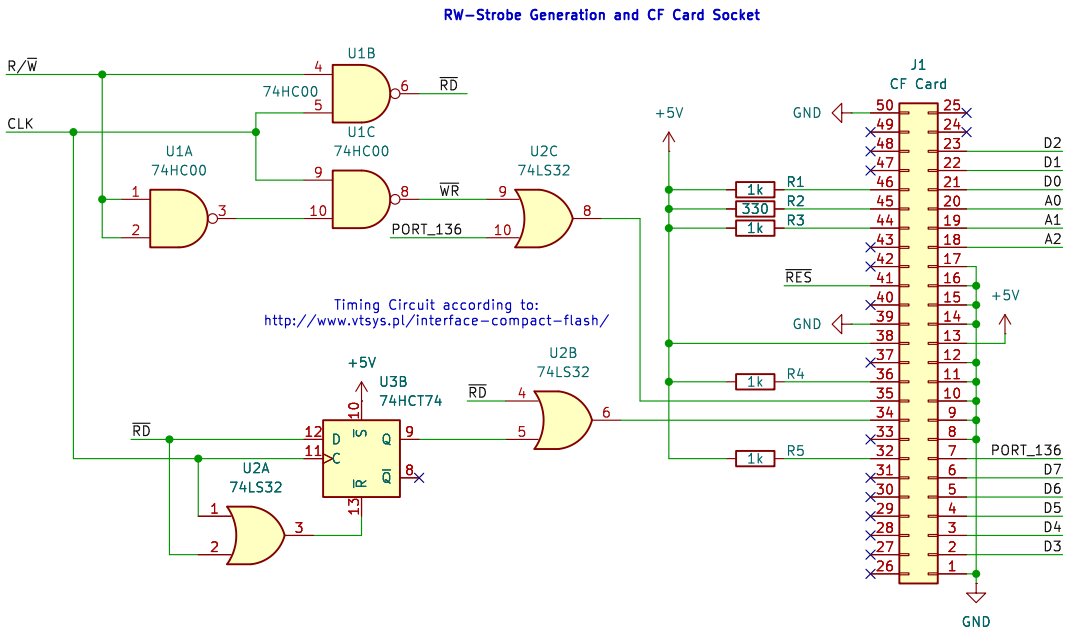

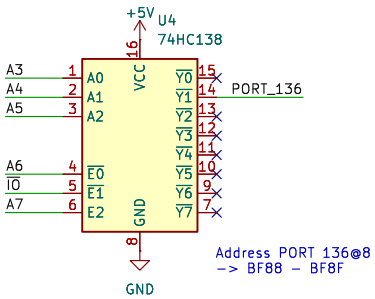

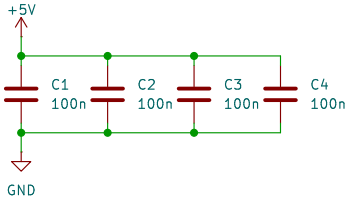

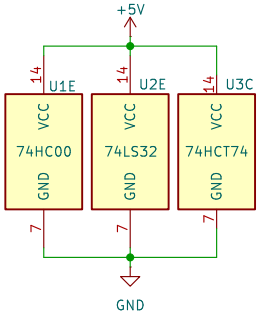

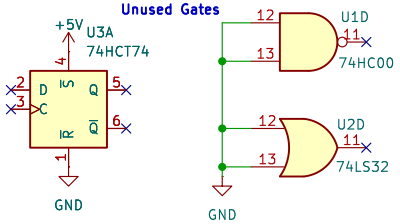

CF Card Interface

Synthron

Sheet: /CF Card/

File: CF.kicad_sch

Title: S65xx Computer System

Size: A4	Date: 2024-06-30	Rev: 1.0
KiCad E.D.A. 8.0.3		Id: 14/17

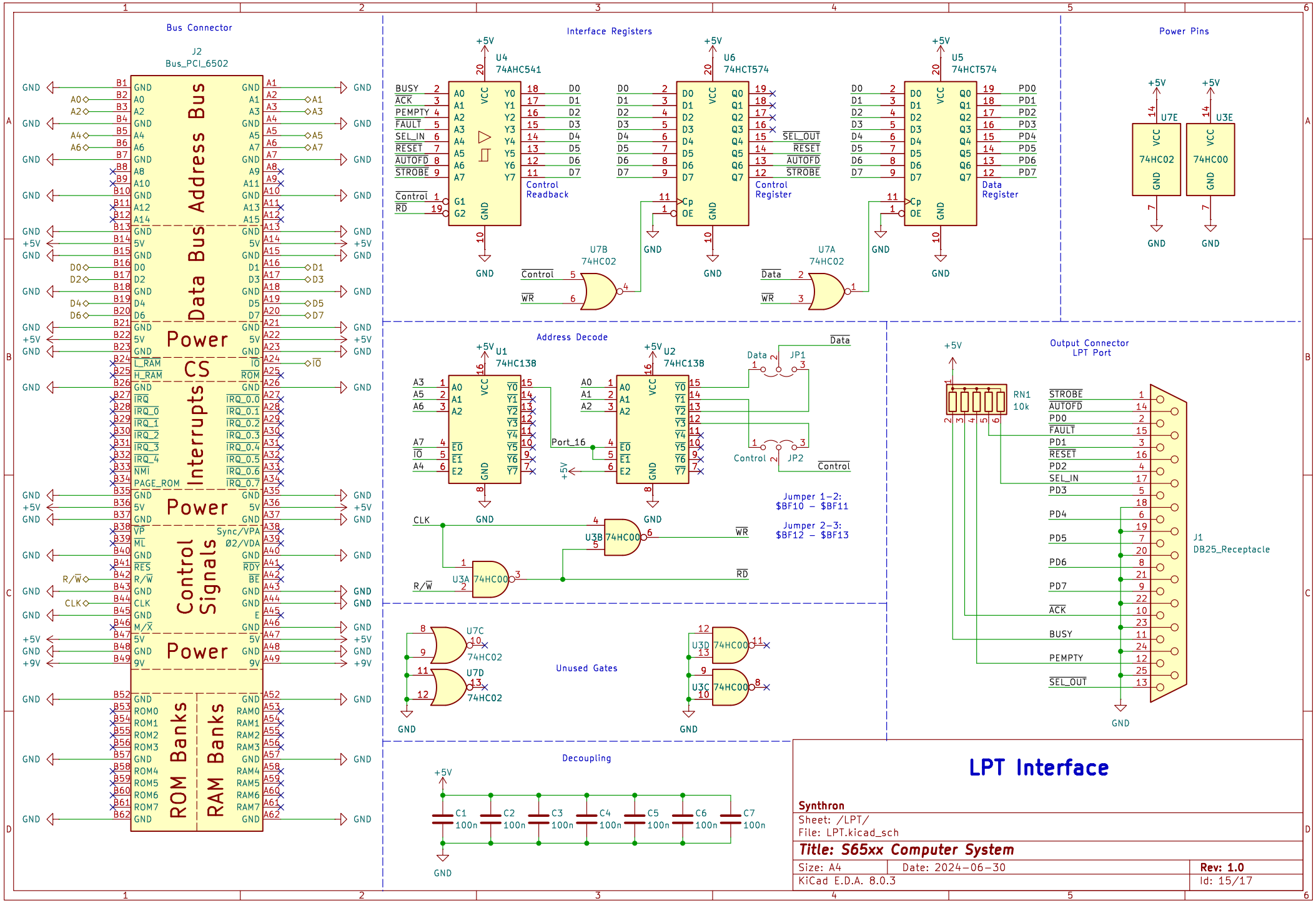
Bus Connector
J2
Bus_PCI_6502
Address Bus
Data Bus
Power
CS
Interrupts
Power
Control Signals
Power
ROM Banks
RAM Banks
Interface Registers
U4
74AHC541
Control Readback
U6
74HCT574
Control Register
U5
74HCT574
Data Register
U7B
74HC02
U7A
74HC02
Power Pins
U7E
74HC02
U3E
74HC00
Address Decode
U1
74HC138
U2
74HC138
JP1
JP2
Jumper 1–2: $BF10 – $BF11
Jumper 2–3: $BF12 – $BF13
U3B 74HC00
U3A 74HC00
Output Connector
LPT Port
RN1
10k
J1
DB25_Receptacle
Unused Gates
U7C
74HC02
U7D
74HC02
U3D 74HC00
U3C 74HC00
Decoupling
C1 100n
C2 100n
C3 100n
C4 100n
C5 100n
C6 100n
C7 100n
LPT Interface
Synthron
Sheet: /LPT/
File: LPT.kicad_sch
Title: S65xx Computer System
Size: A4
Date: 2024-06-30
Rev: 1.0
KiCad E.D.A. 8.0.3
Id: 15/17

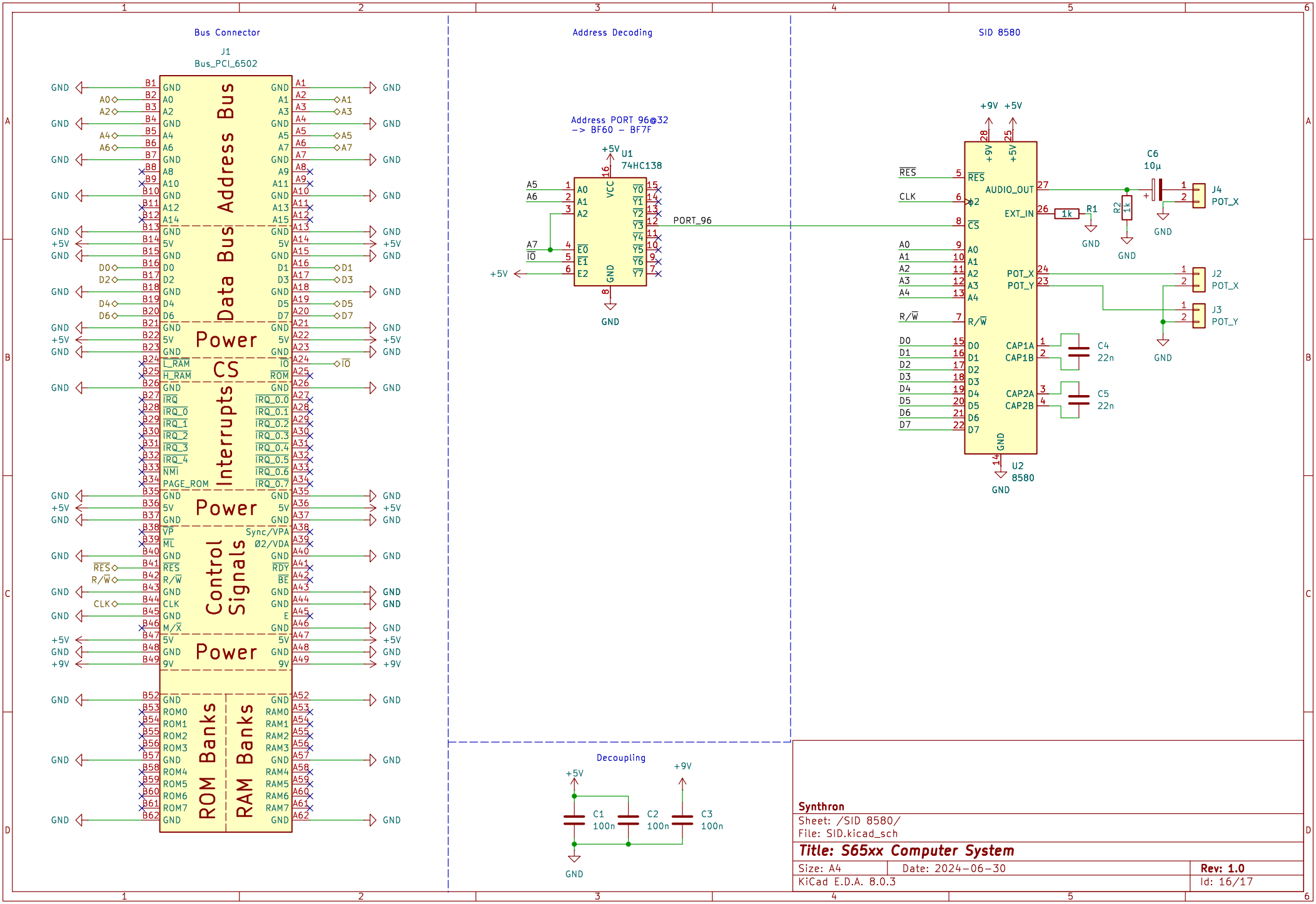
Bus Connector
J1
Bus_PCI_6502
Address Bus
Data Bus
Power
CS
Interrupts
Control Signals
ROM Banks
RAM Banks
Address Decoding
Address PORT 96@32
-> BF60 - BF7F
U1
74HC138
PORT_96
SID 8580
U2
8580
C6
10µ
J4
POT_X
J2
POT_X
J3
POT_Y
C4
22n
C5
22n
R1
1k
R2
1k
Decoupling
C1
100n
C2
100n
C3
100n
Synthron
Sheet: /SID 8580/
File: SID.kicad_sch
Title: S65xx Computer System
Size: A4
Date: 2024-06-30
Rev: 1.0
KiCad E.D.A. 8.0.3
Id: 16/17

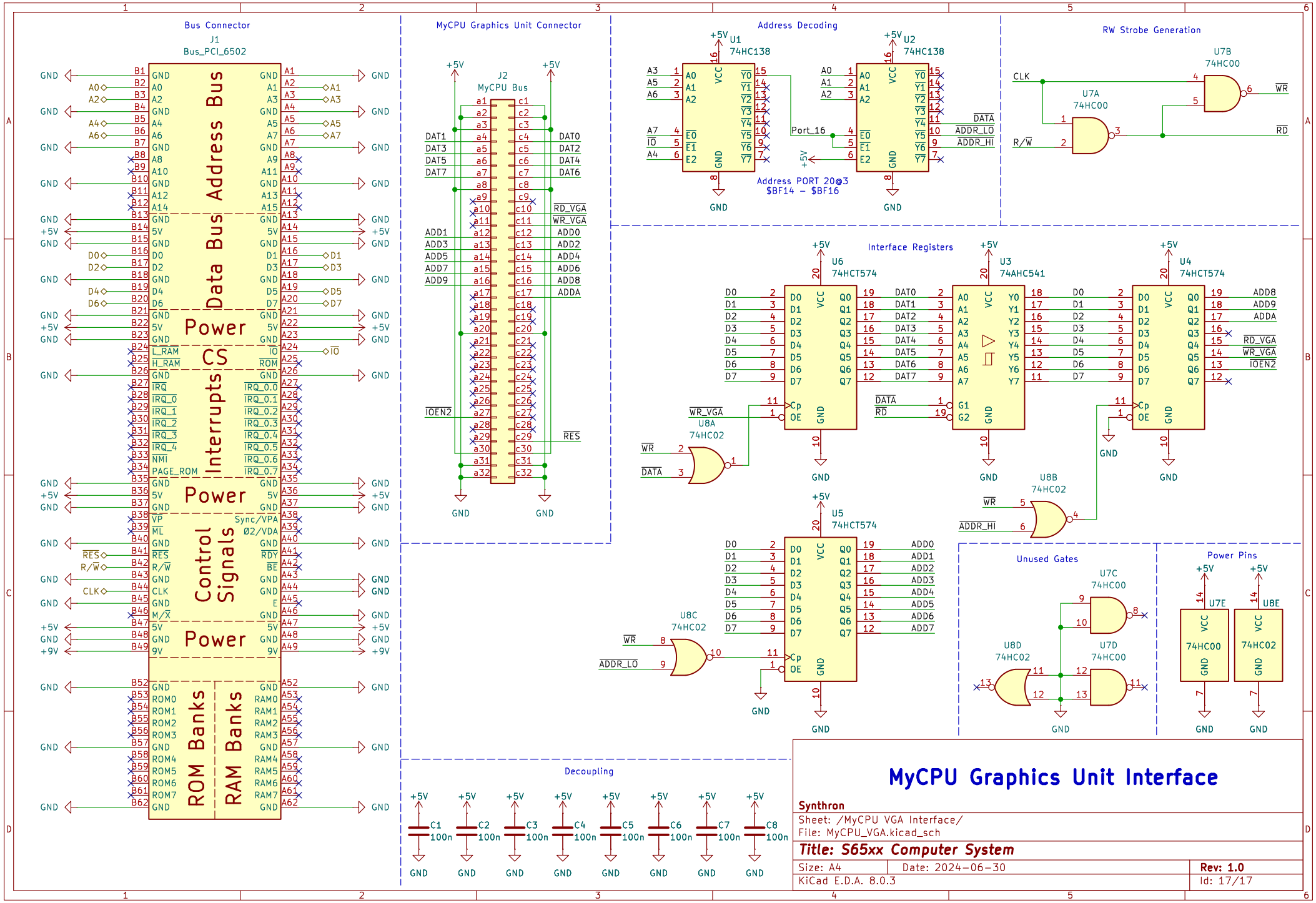
Bus Connector
J1
Bus_PCI_6502
Address Bus
Data Bus
Power
CS
Interrupts
Power
Control Signals
Power
ROM Banks
RAM Banks
MyCPU Graphics Unit Connector
J2
MyCPU Bus
Address Decoding
U1
74HC138
U2
74HC138
Port_16
Address PORT 20@3
$BF14 – $BF16
RW Strobe Generation
U7B
74HC00
U7A
74HC00
Interface Registers
U6
74HCT574
U3
74AHC541
U4
74HCT574
U8A
74HC02
U8B
74HC02
U5
74HCT574
U8C
74HC02
Unused Gates
U7C
74HC00
U8D
74HC02
U7D
74HC00
Power Pins
U7E
74HC00
U8E
74HC02
Decoupling
C1 100n
C2 100n
C3 100n
C4 100n
C5 100n
C6 100n
C7 100n
C8 100n
MyCPU Graphics Unit Interface
Synthron
Sheet: /MyCPU VGA Interface/
File: MyCPU_VGA.kicad_sch
Title: S65xx Computer System
Size: A4
Date: 2024-06-30
Rev: 1.0
KiCad E.D.A. 8.0.3
Id: 17/17