Teknisk rapport
SIS-TR 91102:2016

Publicerad/Published: 2016-04-06
Utgåva/Edition: 2
Språk/Language: engelska/English
ICS: 11.180.01; 13.320; 35.020; 35.080; 35.240.80

Digitala trygghetslarm – Internetprotokoll för digitala trygghetslarm (SCAIP) – Implementationsvägledning

Digital social alarm – Social care alarm internet protocol (SCAIP) – Implementation guideline

SIS single user license: Syntilio bv, Ordered by: j.stelwagen@syntilio.com. Date: 2026-03-06

SIS single user license: Syntilio bv, Ordered by: j.stelwagen@syntilio.com. Date: 2026-03-06

Standarder får världen att fungera

SIS (Swedish Standards Institute) är en fristående ideell förening med medlemmar från både privat och offentlig sektor. Vi är en del av det europeiska och globala nätverk som utarbetar internationella standarder. Standarder är dokumenterad kunskap utvecklad av framstående aktörer inom industri, näringsliv och samhälle och befrämjar handel över gränser, bidrar till att processer och produkter blir säkrare samt effektiviserar din verksamhet.

Delta och påverka
Som medlem i SIS har du möjlighet att påverka framtida standarder inom ditt område på nationell, europeisk och global nivå. Du får samtidigt tillgång till tidig information om utvecklingen inom din bransch.

Ta del av det färdiga arbetet
Vi erbjuder våra kunder allt som rör standarder och deras tillämpning. Hos oss kan du köpa alla publikationer du behöver – allt från enskilda standarder, tekniska rapporter och standard-paket till handböcker och onlinetjänster. Genom vår webbtjänst e-nav får du tillgång till ett lättnavigerat bibliotek där alla standarder som är aktuella för ditt företag finns tillgängliga. Standarder och handböcker är källor till kunskap. Vi säljer dem.

Utveckla din kompetens och lyckas bättre i ditt arbete
Hos SIS kan du gå öppna eller företagsinterna utbildningar kring innehåll och tillämpning av standarder. Genom vår närhet till den internationella utvecklingen och ISO får du rätt kunskap i rätt tid, direkt från källan. Med vår kunskap om standarders möjligheter hjälper vi våra kunder att skapa verklig nytta och lönsamhet i sina verksamheter.

Vill du veta mer om SIS eller hur standarder kan effektivisera din verksamhet är du välkommen in på www.sis.se eller ta kontakt med oss på tel 08-555 523 00.

Standards make the world go round

SIS (Swedish Standards Institute) is an independent non-profit organisation with members from both the private and public sectors. We are part of the European and global network that draws up international standards. Standards consist of documented knowledge developed by prominent actors within the industry, business world and society. They promote cross-border trade, they help to make processes and products safer and they streamline your organisation.

Take part and have influence
As a member of SIS you will have the possibility to participate in standardization activities on national, European and global level. The membership in SIS will give you the opportunity to influence future standards and gain access to early stage information about developments within your field.

Get to know the finished work
We offer our customers everything in connection with standards and their application. You can purchase all the publications you need from us - everything from individual standards, technical reports and standard packages through to manuals and online services. Our web service e-nav gives you access to an easy-to-navigate library where all standards that are relevant to your company are available. Standards and manuals are sources of knowledge. We sell them.

Increase understanding and improve perception
With SIS you can undergo either shared or in-house training in the content and application of standards. Thanks to our proximity to international development and ISO you receive the right knowledge at the right time, direct from the source. With our knowledge about the potential of standards, we assist our customers in creating tangible benefit and profitability in their organisations.

If you want to know more about SIS, or how standards can streamline your organisation, please visit www.sis.se or contact us on phone +46 (0)8-555 523 00

SIS single user license: Syntilio bv, Ordered by: j.stelwagen@syntilio.com. Date: 2026-03-06

Denna tekniska rapport är inte en svensk standard.

Dokumentet ersätter SIS-TR 91102:2014, utgåva 1.

This Technical Report is not a Swedish Standard.

This document replaces SIS-TR 91102:2014, edition 1

© Copyright/Upphovsrätten till denna produkt tillhör SIS, Swedish Standards Institute, Stockholm, Sverige. Användningen av denna produkt regleras av slutanvändarlicensen som återfinns i denna produkt, se standardens sista sidor.

© Copyright SIS, Swedish Standards Institute, Stockholm, Sweden. All rights reserved. The use of this product is governed by the end-user licence for this product. You will find the licence in the end of this document.

Upplysningar om sakinnehållet i detta dokument lämnas av SIS, Swedish Standards Institute, telefon 08-555 520 00. Standarder kan beställas hos SIS Förlag AB som även lämnar allmänna upplysningar om nationell och internationell standard.

Information about the content of this document is available from the SIS, Swedish Standards Institute, telephone +46 8 555 520 00. Standards may be ordered from SIS Förlag AB, who can also provide general information about national and international standards.

Dokumentet är framtaget av kommittén för Trygghetskedjan för trygghetslarm, SIS/TK 574.

Har du synpunkter på innehållet i det här dokumentet, vill du delta i ett kommande revideringsarbete eller vara med och ta fram standarder inom området? Gå in på www.sis.se - där hittar du mer information.

SIS single user license: Syntilio bv, Ordered by: j.stelwagen@syntilio.com. Date: 2026-03-06

Content

Page

Introduction **3**

1 Scope **4**

2 Normative references **4**

3 Terms and abbreviations **4**

4 Use case examples **5**
4.1 General 5
4.2 Example 1 – Alarm without voice 5
4.3 Example 2 – Alarm with voice 5
4.4 Example 3 – Heartbeats 6

5 Alarm session and call setup methods **7**
5.1 General 7
5.2 Specifying call setup method 7
5.3 Call setup example 1: Normal outgoing call from the alarm sender 7
5.4 Call setup example 2: Callback request using SIP 8
5.5 Call setup example 3: LUC GSM dial-in to ARC with predefined number 8
5.6 Call setup example 4: Callback request using GSM 10
5.7 Call setup example 5: Voice call to specified destination. 10
5.8 Audio session control 10

6 Termination of SCAIP sessions **11**
6.1 Message exchange 11
6.2 Voice or multimedia termination 11

7 Interaction between the SCAIP and SIP protocols **12**
7.1 General 12
7.2 Example of typical SCAIP communication model 12
7.3 SCAIP Messages and SIP Messages 13
7.4 SCAIP identifiers and SIP identifiers 13
7.5 SIP registration and authentication 14
7.6 SCAIP Message fragmentation 14
7.7 SIP media flows in relationship to the SCAIP application usage 14
7.8 Small SIP installation 14
7.9 Medium SIP installation 15
7.10 Large SIP installation 15
7.11 Assisted group living 16
7.12 SIP and firewalls 16

SIS single user license: Syntilio bv, Ordered by: j.stelwagen@syntilio.com. Date: 2026-03-06

Introduction

This is a technical report for an open IP-based communication protocol that can be used by social care services to support people living in their own homes or in grouped living. Standardization of an open communication protocol is needed to ensure interoperability in the market of social care services.

The SCAIP protocol defined in SS 91100:2014 will allow an open transparent non-proprietary information transfer and communication between users and social services via mainstream communication networks. An official standardized open protocol prevents social care alarms from being blocked or restricted in the European and global telecommunications networks and internet connections.

The protocol is defined to handle initiation, addressing, and transport functions based on SIP (Session Initiation Protocol) in order to set up a media stream and to transfer information between the user and the receiver. The data exchange of the protocol is defined as an XML schema including the alarm types, codes and additional information.

The series of publications for social care alarms include the following:

SS 91100:2014 *Digital social alarm – Social care alarm internet protocol (SCAIP) – Specification*

SIS-TR 91101:2016 *Digital social alarm – Social care alarm internet protocol (SCAIP) – Test specification*

SIS-TR 91102:2016 *Digital social alarm – Social care alarm internet protocol (SCAIP) – Implementation guideline*

SIS single user license: Syntilio bv, Ordered by: j.stelwagen@syntilio.com. Date: 2026-03-06

1 Scope

This technical report is an implementation guideline for the SCAIP protocol as defined in SS 91100:2014.

The document is intended to be used as a guide to make the standard easy to understand and implement in various situations. The document is to be used by software designers and development personnel.

This document is not the full specification of the SCAIP protocol and does not fully cover all functionality of the SCAIP protocol. The main purpose is to describe the basic functionality of the SCAIP protocol and the relationships to underlying protocols such as SIP.

2 Normative references

This clause specifies the following documents as indispensable for the use of this document. For dated references, only the dated reference applies. For undated references the latest edition of the document applies (including all amendments).

SS 91100:2014 *Digital social alarm – Social care alarm internet protocol (SCAIP) –Specification*

3 Terms and abbreviations

For the use of this document the terms and abbreviations in SS 91100:2014 apply in addition to the following terms and abbreviations.

3.1
operator
person who receives and acts upon an alarm in an alarm receiving centre

3.2
keep-alive
message sent by one device to another to check that the link between the two is operating, or to prevent this link from being broken

Abbreviation	Definition
GW	Gateway
SIP UA	SIP User Agent (as defined RFC 3261)

SIS single user license: Syntilio bv, Ordered by: j.stelwagen@syntilio.com. Date: 2026-03-06

4 Use case examples

4.1 General

Three use cases are described in this section: non-voice, voice and heartbeat. These three cases cover all scenarios used in the SCAIP protocol.

The voice case can then be separated in a number of voice setups described in clause 5, Alarm session and call setup methods.

4.2 Example 1 – Alarm without voice

The response from ARC is sent directly without any errors or HOLD response. Data element *reference* is echoed and data element *status-number* is set to 0.

Table 1 – LUC sends non-voice alarm request to ARC

	LUC action	ARC action

1	LUC sends non-voice alarm request.
	`<mrq>`
	`<ref>1242</ref>`
	`<cid>678</cid>`
	`<dty>27</dty>`
	`<stc>16</stc>`
	`</mrq>`	

2		ARC responds OK.
		`<mrs>`
		`<ref>1242</ref>`
		`<snu>0</snu>`
		`</mrs>`

4.3 Example 2 – Alarm with voice

The response from ARC contains a hold status as indicated by *status-number* data element set to 4. This indicates that ARC cannot respond directly to the alarm request from LUC. E.g. ARC is already processing the alarm request and is not immediately proceeding with further actions. If LUC needs an update on ARC status for this request, the request may be resent.

Responding with hold status is not always the case, i.e. ARC may process the request immediately.

As LUC receives a hold status it resends the alarm request after configured time. As soon as ARC can process the alarm request correctly, it responds with the *status-number* set to 0. If this can't be done, the resending of the alarm request continues for configured time or until ARC responds with a different *status-number* value.

In this example the ARC response with *status-number* set to 0 contains *media-reply* set to 1 which is a voice communication request.

SIS single user license: Syntilio bv, Ordered by: j.stelwagen@syntilio.com. Date: 2026-03-06

Table 2 – LUC sends voice alarm request to ARC

	LUC action	ARC action

1	LUC sends voice alarm request.
	`<mrq>`
	`<ref>1243</ref>`
	`<cid>678</cid>`
	`<dty>2</dty>`
	`</mrq>`	

2		ARC responds HOLD.
		`<mrs>`
		`<ref>1243</ref>`
		`<snu>4</snu>`
		`</mrs>`

3	LUC waits at least the minimum “HOLD polling time” seconds.	
4	Step 1-3 are repeated until ARC responds with *status-number*=0 (OK) instead of 4 (HOLD).	

5		ARC responds OK with *media-reply*=1.
		`<mrs>`
		`<ref>1243</ref>`
		`<snu>0</snu>`
		`<mre>1</mre>`
		`</mrs>`

6	LUC initiates voice-session to ARC. See the different voice setups in clause 5.	

4.4 Example 3 – Heartbeats

See 7.3 for more information about SCAIP heartbeats in relationship to underlying protocols.

Table 3 – LUC sends a heartbeat to ARC

	LUC action	ARC action

1	LUC sends a heartbeat request.
	`<mrq>`
	`<ref>1244</ref>`
	`<mty>PI</mty>`
	`<cid>678</cid>`
	`<dty>2</dty>`
	`</mrq>`	

2		ARC responds OK.
		`<mrs>`
		`<ref>1244</ref>`
		`<snu>0</snu>`
		`</mrs>`

3	Step 1-2 are repeated after minimum “Heartbeat time” minutes, as defined in Clause 4.5 “Heartbeat” in SS 91100:2014.	

SIS single user license: Syntilio bv, Ordered by: j.stelwagen@syntilio.com. Date: 2026-03-06

5 Alarm session and call setup methods

5.1 General

For explanation of SCAIP Messages and SIP Messages, see 7.3.

The SCAIP protocol is designed to allow an IP alarm session with the voice supported through other paths and managed by the protocol. The setup of the call looks like:

```
MESSAGE sip:user2@example.com SIP/2.0
Via: SIP/2.0/UDP user1.example.com;branch=z9hG4bK776sgdkse
To: sip:user2@example.com
From: sip:user1@example.com;tag=49583
Call-ID: asd88asd77a@192.0.2.13
CSeq: 1 MESSAGE
Max-Forwards: 70
Content-Type: application/scaip+xml
Content-Length: 144

<mrq>
    <ref>1234</ref>
    <cid>123456</cid>
    <dty>0001</dty>
    <stc>001</stc>
</mrq>
```

5.2 Specifying call setup method

In all call setup examples below, *call-handling*, *transferred-number*, *callhandling-reply* and *caller-id* data elements are used. The URI schemes for defining an address in the *caller-id* and *transferred-number* data elements are:

— “no-voice” for no voice capabilities

— “sip” for voice supported through SIP

— “gsm” for voice supported through GSM.

Example of a *caller-id* for voice supported through SIP: `<crd>sip:user1@example.com</crd>`

The “sip-pp” URI scheme as specified in SS 91100:2014 for *caller-id* data element should not be used. If received it shall be treated as the “sip” URI scheme for backwards compatibility. The “gsm” URI scheme should in a SIP platform be treated as a “tel” URI scheme.

Example: Swedish mobile number: `gsm:+46704308601` is the same as `tel:+46704308601` in the SIP protocol. Note that the mobile number is an example and shall not be used.

5.3 Call setup example 1: Normal outgoing call from the alarm sender

Call setup example 1 shows the basic method to make the alarm using SIP for both message and voice with the same SIP URI.

If *caller-id* is used then only valid URI schemes can be used. If *caller-id* is omitted, the SIP URI from the SIP Message is used as *caller-id* of LUC.

SIS single user license: Syntilio bv, Ordered by: j.stelwagen@syntilio.com. Date: 2026-03-06

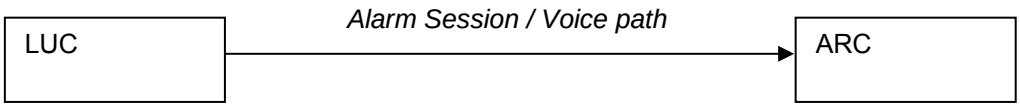

Figure 1 – Basic method for using SIP for both message and voice with the same SIP URI

Example without mandatory XML elements:

Request:

```
<cha>0</cha>(or omitted)
<crd>sip:user1@example.com</crd>
```

Response:

```
<cre>61</cre>(or omitted)
```

5.4 Call setup example 2: Callback request using SIP

In call setup example 2, callback is requested using SIP for both message and voice with the same SIP URI. If *"caller-id"* is used then only valid URI schemes can be used. If *caller-id* is omitted the SIP URI from the SIP Message is used as *caller-id* of LUC.

A callback function is used and requested from LUC. In the example, LUC will be open for a callback from ARC for 5 minutes.

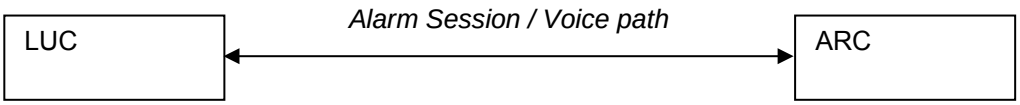

Figure 2 – Callback using SIP for both message and voice with the same SIP URI

Example without mandatory XML elements:

Request:

```
<cha>1</cha>
<crd>sip:user1@example.com</crd>
```

Response:

```
<cre>05</cre>
```

If *caller-id* is omitted, the SIP URI from the SIP Message is used as *caller-id* of LUC.

Request:

```
<cha>1</cha>
```

Response:

```
<cre>05</cre>
```

5.5 Call setup example 3: LUC GSM dial-in to ARC with predefined number

In this example LUC is transmitting the alarm through SCAIP on IP according to the protocol definition. The voice is transmitted separately on another path, typically GSM. The example describes a call from LUC to ARC over separate media. LUC lists all possible media that can be used as voice channel. In this case LUC chooses which media to use, SIP or GSM, as ARC doesn't list any media for communication.

SIS single user license: Syntilio bv, Ordered by: j.stelwagen@syntilio.com. Date: 2026-03-06

In this case there are two ways to set up the call, over GSM or over SIP, as listed by the two *caller-id* data elements.

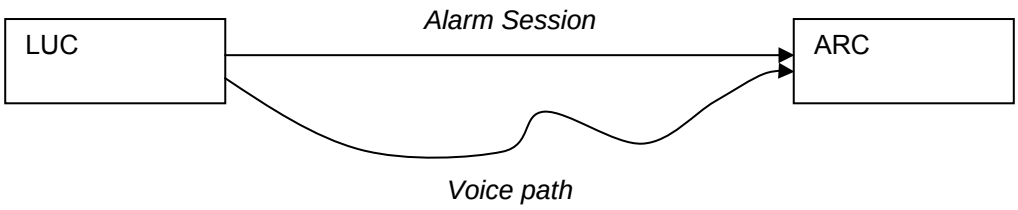

Figure 3 – Call setup when using a separate voice path

Example without mandatory XML elements:

Request:

```
<cha>0</cha>
<crd>sip:user1@example.com</crd>
<crd>gsm:+46704308601</crd>
```

Note that the *call-handling* data element can be omitted.

Response:

```
<cre>61</cre>
```

Note that the *callhandling-reply* data element can be omitted, in which case it defaults to 61.

If LUC has GSM capability, but is not configured with the local mobile number, it should use an empty field to indicate this as showed in the request below. In this case ARC needs to be configured with LUC phone number.

Request:

```
<cha>0</cha>
<crd>gsm:</crd>
<crd>sip:user1@example.com</crd>
```

Please note that the *call-handling* data element can be omitted.

Response:

```
<cre>61</cre>
```

Note that the *callhandling-reply* data element can be omitted, in which case it is interpreted as 61 according to SCAIP.

To force LUC to use a specific call setup method, ARC can request an URI scheme in *transferred-number* data element. No number is needed as it is a call to a predefined number. If a number is added, *callhandling-reply* should be set to 62.

Request:

```
<cha>0</cha>
<crd>sip:user1@example.com</crd>
<crd>gsm:+46704308601</crd>
```

Response:

```
<cre>61</cre>
<tnu>gsm:</tnu>
```

ARC may only select one of the URI schemes from the *caller-id* data elements in the request.

SIS single user license: Syntilio bv, Ordered by: j.stelwagen@syntilio.com. Date: 2026-03-06

5.6 Call setup example 4: Callback request using GSM

This example describes call setup using GSM callback. In this example LUC is transmitting the alarm through SCAIP on IP according to the protocol definition. The voice is transmitted separately on another path, typically GSM. When a callback function is used and requested from LUC, LUC should be open for callback for 5 minutes. ARC chooses media from the list sent by LUC.

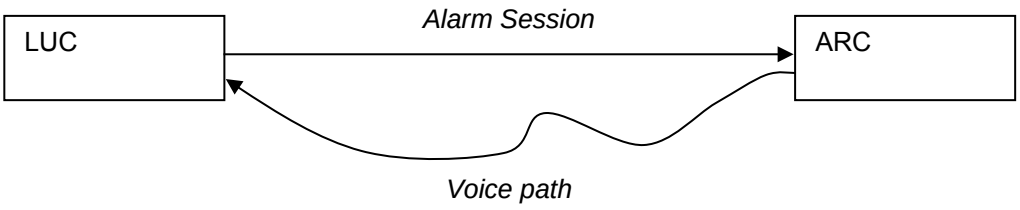

Figure 4 – Example of callback when using separate voice path

Example without mandatory XML elements:

Request:

```
<cha>1</cha>
<crd>sip:user1@example.com</crd>
<crd>gsm:+46704308601</crd>
```

Response:

```
<cre>05</cre>
```

5.7 Call setup example 5: Voice call to specified destination.

In this example LUC is transmitting the alarm through SCAIP on IP according to the protocol definition whilst the voice is transmitted separately on another destination as specified by ARC.

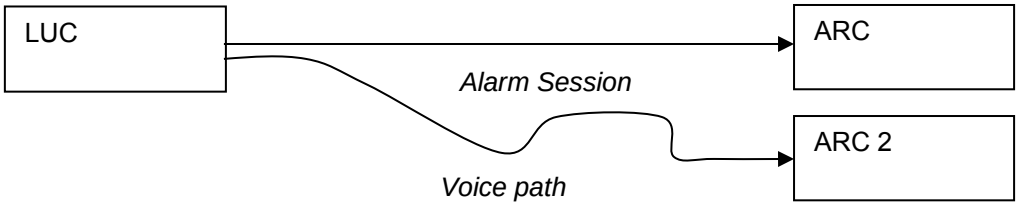

Figure 5 – Example of using SIP with separate voice path and different destination

Example without mandatory XML elements:

Request:

```
<cha>0</cha>
<crd>sip:user1@example.com</crd>
<crd>gsm:+46704308601</crd>
```

Response:

```
<cre>62</cre>
<tnu>gsm:+46704308601</tnu>
```

5.8 Audio session control

Audio session control is specified in clause 7 in SS 91100:2014. If used, DTMF codes are sent from ARC to LUC during voice or multimedia communication. LUC should be ready to receive tones in multiple formats, for example SIP INFO, RFC 4733 or in-band audio tones.

ARC should send DTMF codes according to the following:

SIS single user license: Syntilio bv, Ordered by: j.stelwagen@syntilio.com. Date: 2026-03-06

For mobile network calls, such as GSM calls, DTMF in-band audio tones should be used.

— If the call is initiated from a non-SIP phone, DTMF codes are sent from ARC as in-band audio tones and are decoded by the LUC as in-band audio tones

— If the call is initiated from a SIP-phone, DTMF codes may be sent as RFC 4733 codes and then converted to in-band tones when they enter the GSM network.

For SIP calls, DTMF codes should be sent according to RFC 4733.

— LUC implementation is used in a mixed environment of technologies including GSM-voice connection. Therefore the LUC should be able to receive and decode DTMF codes as out-of-band or in-band tones to allow the ARC to reach the LUC in the optimal way.

In the voice or multimedia communication of the SCAIP protocol the DTMF codes have very low integrity and confidentiality requirements, due to the fact that they represent audio settings in the call and attributes for media control, for example turning a microphone or loud-speaker on or off. The DTMF codes should not be used for sending PIN-codes or other codes that need to be protected for security or integrity reasons. The standard specifies a limited set of functions for the use of DTMF-codes. See clause 7 in SS 91100:2014.

6 Termination of SCAIP sessions

6.1 Message exchange

The following cases shall end an alarm session causing LUC to discard the current reference number:

a) When LUC receives a message response with *status-number* set to 0, 5 or 6

b) When LUC's total elapsed polling time while continuously receiving message responses with *status-number* set to 4 exceeds the maximum "HOLD polling time" as defined in SS 91100:2014, 4.2

c) When the total elapsed time after having received a message response with *status-number* set to 0 and *media-reply* greater than 0 while trying to establish an outgoing voice call session exceeds the "voice call initiation timeout" as defined in SS 91100:2014, clause 5.

The following case may cause ARC to terminate the alarm session and abort an ongoing alarm handling session:

d) When the total elapsed time after having sent a message response with *status-number* set to 0 and *media-reply* greater than 0 while waiting for an incoming voice call exceeds the "voice call initiation timeout" as defined in SS 91100:2014, clause 5.

6.2 Voice or multimedia termination

Figure 6 clarifies the procedures "Session Teardown Request" and "Session Teardown Response" shown in SS 91100:2014, figure 3, concerning message exchange with voice or multimedia communication via SIP and GSM.

Call hang-up is only signaled in the respective protocols used for call setup. There is no SCAIP request/response used.

SIS single user license: Syntilio bv, Ordered by: j.stelwagen@syntilio.com. Date: 2026-03-06

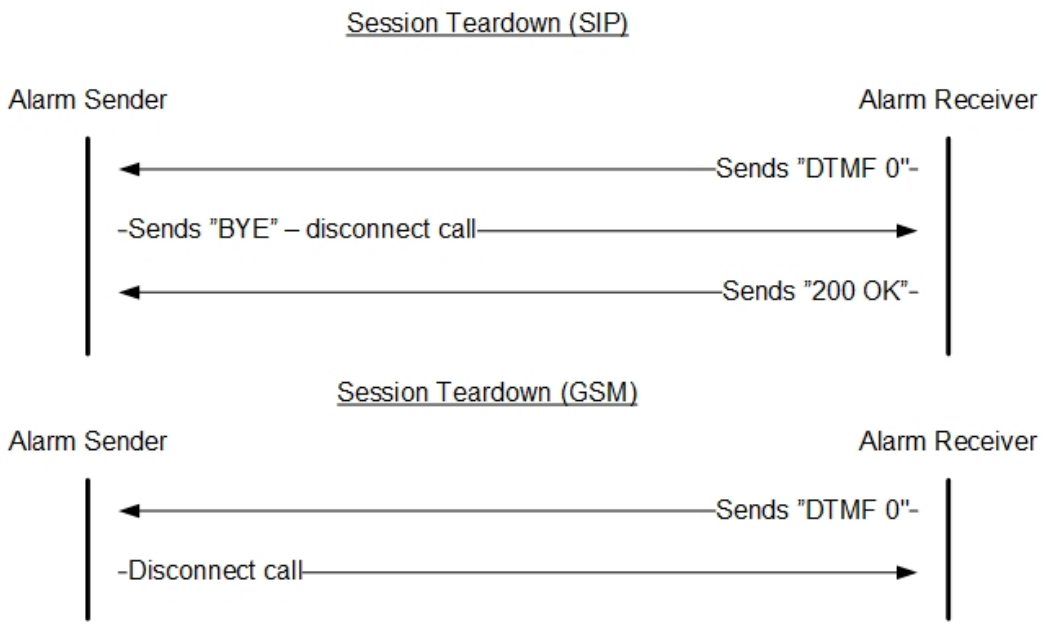

Figure 6 – Session Teardown for SIP and GSM

7 Interaction between the SCAIP and SIP protocols

7.1 General

SCAIP is designed to allow alarm sessions through different carriers. The SCAIP alarm session is using IP as the principal communications protocol and can manage multimedia, such as voice, supported through other systems, typically GSM.

7.2 Example of typical SCAIP communication model

Figure 7 illustrates both communication through a fixed IP and mobile telecommunications interface. The SCAIP protocol also supports other voice paths to be used. These are not part of, but partly controlled by, SCAIP.

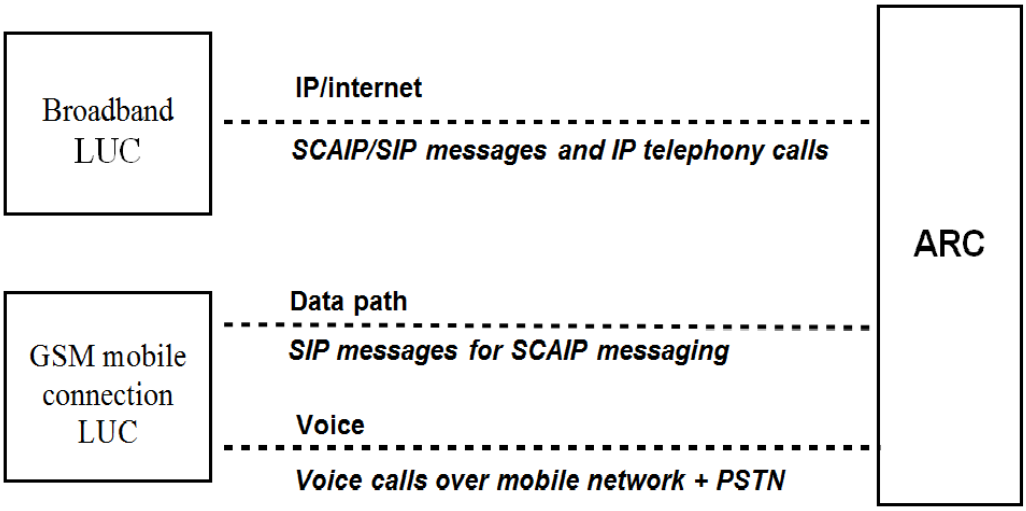

Figure 7 – Typical configuration of communication between local unit and controller (LUC) and alarm receiving centre (ARC)

SIS single user license: Syntilio bv, Ordered by: j.stelwagen@syntilio.com. Date: 2026-03-06

7.3 SCAIP Messages and SIP Messages

SCAIP Messages are Message Requests and Message Responses as described in SS 91100:2014, clause 6.

SIP Messages are messages that can carry application data, see RFC 3261.

SCAIP Messages are transferred between LUC and ARC as XML data attached to a SIP Message.

Note that it is important to distinguish between the SCAIP protocol message exchange and the SIP protocol.

In the network layer model for SCAIP, described in Table 4, the SIP Message may be considered a carrier for SCAIP Messages running in the application layer.

Table 4 – Network layer model for SCAIP when used over SIP

Layer	Description
Social care application	SCAIP Message
Application layer protocol	SIP Message
Transport	TCP, UDP
Network	IP
Data link	GSM, Ethernet etc.
Physical	Wire, Radio

All SCAIP Messages are attached to SIP Messages as an XML document and the SCAIP protocol does not modify the SIP layer implementation in any way.

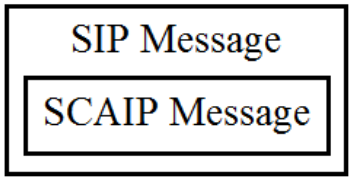

Figure 8 – Model of a SCAIP Message attached to SIP Message

LUC creates a SCAIP Message and hands it over to the embedded SIP UA. The SIP UA forwards the SIP Message to ARC with the SCAIP message as an attachment. ARC extracts the SCAIP Message from the SIP Message.

Retransmissions of SCAIP Messages are independent of the SIP UA's own retransmission attempts and need to be handled by LUC. The reason is that a valid transmission of a SIP Message does not guarantee that ARC correctly processes or accepts the SCAIP message.

SCAIP heartbeat is an application layer keep-alive function. Underlying protocols needs to handle NAT (Network Address Translation) and similar keep-alive functions.

7.4 SCAIP identifiers and SIP identifiers

The SIP Caller ID is specified by the SIP Message's *From* header field. The value in this field is the SIP account (AOR) used by the device when registering. This address is also specified in the SCAIP *caller-id* data element for callbacks if SIP-based calls are requested by the device.

SIS single user license: Syntilio bv, Ordered by: j.stelwagen@syntilio.com. Date: 2026-03-06

7.5 SIP registration and authentication

SIP registrations should be used for SCAIP requests and responses to be transmitted between LUC and ARC. The SCAIP response is sent by ARC in a SIP Message request addressed to the registered contact in the SIP location database. This address is found by looking up the *From* header field´s address (SIP URI) sent in the SIP Message carrying the SCAIP Message Request.

ARC uses HTTP MD5 Digest authentication as specified for SIP usage in RFC 3261 to authenticate the SIP client used by LUC.

Each LUC has a unique SIP address. A group may share authentication credentials, i.e. MD5 Digest username and secret.

LUC shall not accept SIP Message request to other SIP URIs than its own, i.e. the address of record or the registered contact of the SIP user agent.

7.6 SCAIP Message fragmentation

SS 91100:2014 defines a SCAIP data element *additional-message* for fragmentation of large documents. Experience has shown that this situation currently does not occur and that using the additional-message data element is not needed. If a SCAIP Message exceeds 1000 bytes, it is recommended that connection oriented transports for SIP are used or that the SIP Message attachment is compressed using GZIP, see RFC 1950 and RFC 2616 (“Content-encoding: deflate” SIP header), in order to avoid UDP fragmentation and comply with the current maximum transmission unit on the network link.

7.7 SIP media flows in relationship to the SCAIP application usage

The SCAIP protocol has functions for media control, for example for turning a microphone or loud-speaker on or off. Control can be made by *media-reply* data elements or DTMF key presses during a call. These functions do not modify the SIP/RTP session, which means that there are no SIP re-INVITEs sent to modify the current state of the media stream. All SIP calls are full duplex during a SCAIP session, when SIP is used for the call.

7.8 Small SIP installation

Figure 9 illustrates a small SIP installation connected at a LAN. ARC is on-site but can relay calls to remote operators at other sites when busy or off-duty.

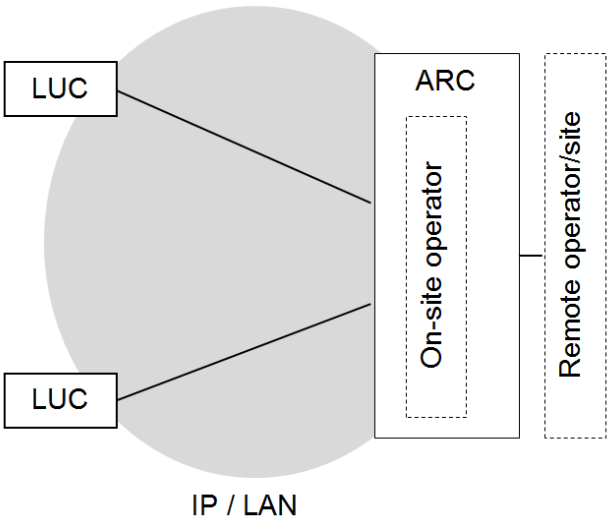

Figure 9 –Small size installation using IP/LAN

SIS single user license: Syntilio bv, Ordered by: j.stelwagen@syntilio.com. Date: 2026-03-06

7.9 Medium SIP installation

Figure 10 illustrates a medium SIP installation connected to internet and/or GSM. A SIP proxy is added to manage the setup of calls between SIP devices including controlling of call routing.

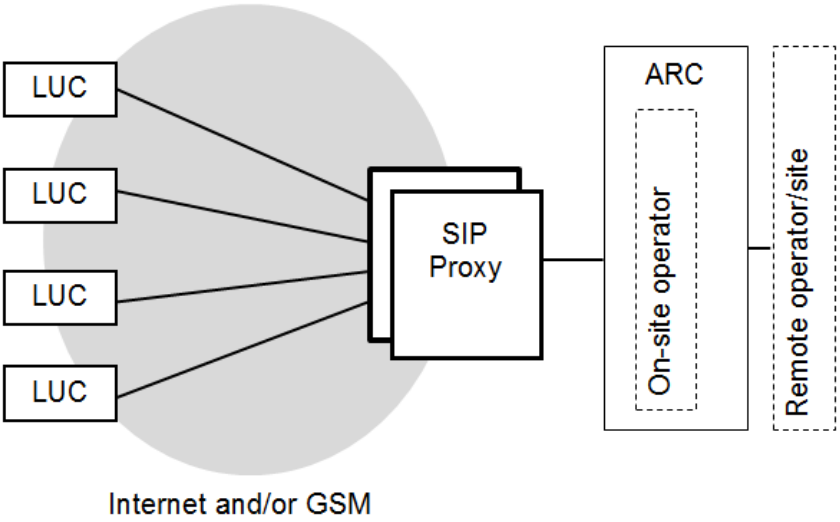

Figure 10 – Medium size installation using internet and/or GSM

7.10 Large SIP installation

Figure 11 illustrates a large SIP installation connected to internet and/or GSM. Several SIP proxies, gateways and ARCs can balance the load of a large number of LUCs. The ARCs are also serving as back-up for each other and can interconnect or relay to remote operators, off-site.

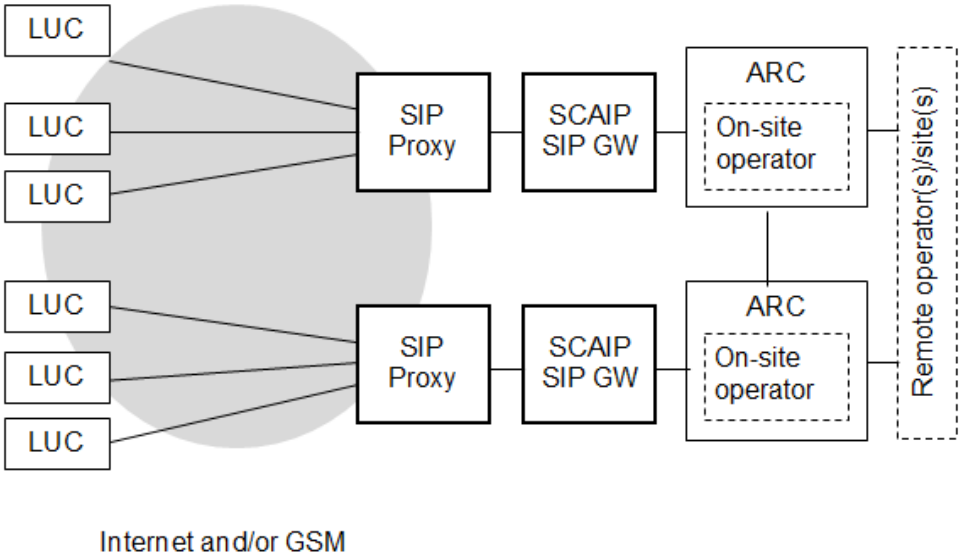

Figure 11 – Large size installation using internet and/or GSM

SIS single user license: Syntilio bv, Ordered by: j.stelwagen@syntilio.com. Date: 2026-03-06

7.11 Assisted group living

Figure 12 illustrate a SIP installation in an assisted group living connected via a LAN. In an assisted group living the alarm receiver may be located within the same building. The connection between the LUC and ARC in this case can be made via a peer-to-peer connection without SIP registration since the alarm may go directly to a SIP phone in the building without centralized server.

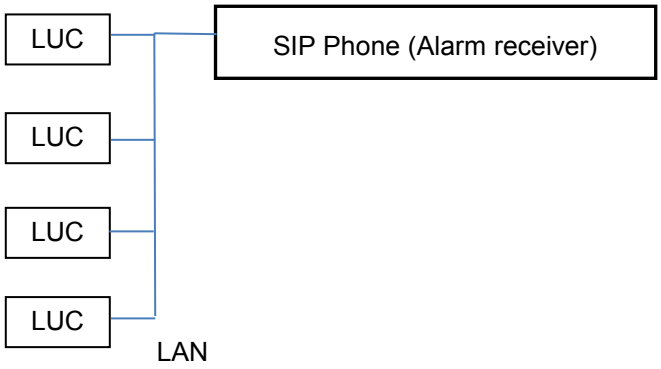

Figure 12 – Assisted group living with local alarm receiver

7.12 SIP and firewalls

Firewalls and NAT servers may affect the SIP sessions and the media transferred over IP. Firewall settings and NAT handling procedures for the SIP protocol are not covered in this document or in SS 91100:2014.

Note that some network servers, like broadband routers for home use and firewalls implement Application Level Gateways (ALG) that may affect signaling and call setup.

SIS single user license: Syntilio bv, Ordered by: j.stelwagen@syntilio.com. Date: 2026-03-06

Anteckningar/Notes

SIS single user license: Syntilio bv, Ordered by: j.stelwagen@syntilio.com. Date: 2026-03-06

Ordlista

Här har vi samlat de förkortningar som oftast används i standardiseringssammanhang och förklarat dem kortfattat. Förkortningarna är sorterade i alfabetisk ordning.

CEN	European Committee for Standardization (Comité Européen de Normalisation). Utarbetar Europastandarder för områden som inte täcks av CENELEC.
CENELEC	European Committee for Electrotechnical Standardization (Comité Européen de Normalisation Electro-technique). Utarbetar Europastandarder inom el.
CWA	CEN/CENELEC Workshop Agreement. Tekniskt dokument utarbetat av CEN- och CENELEC-organiserad arbetsgrupp.
EN	Europastandard från CEN/CENELEC.
ETSI	European Telecommunications Standards Institute. De utarbetar Europastandarder inom telekommunikationsområdet.
FDIS	Final Draft International Standard. Slutligt förslag till global standard från IEC eller ISO.
ICS	International Classification for Standards. Ett internationellt klassificeringssystem för standarder.
IEC	International Electrotechnical Commission. Utarbetar internationell standard inom området el.
ISO	International Organization for Standardization. Utarbetar internationell standard inom alla områden utom telekommunikation och elteknik.
ITS	Informationstekniska standardiseringen. Utarbetar och bevakar standardisering inom informationsteknik. En av de svenska medlemmarna i ETSI, European Telecommunications Standards Institute.
ITU	International Telecommunication Union. Utarbetar internationella standarder inom radio och telekommunikation.
IWA	ISO Workshop Agreement. Tekniskt dokument utarbetad av ISO-organiserad arbetsgrupp.
Konsoliderad	En konsoliderad standard har sitt tillägg inarbetat och ersätter tidigare utgåva.
PAS	Publicly Available Specifications. Tekniska dokument inom IEC och ISO.
prEN	Förslag till Europastandard från CEN, CENELEC eller ETSI.
SEK	SEK Svensk Elstandard. Svarar för standardiseringen inom området el i Sverige. Svensk medlem i CENELEC och IEC.
SIS	SIS, Swedish Standards Institute. Svensk medlem i CEN och ISO.
SIS-TR	Technical Report. Teknisk rapport som beskriver resultat av undersökningar eller andra studier.
SIS-TS	Technical Specification. Teknisk specifikation som anger tekniska krav som ska uppfyllas av en produkt, process eller tjänst.
SIS-WA	SIS Workshop Agreement. Överenskommelse som ger regler, riktlinjer eller kännetecken för aktiviteter eller deras resultat.
SIS-WS	SIS Workshop. Standardiseringsprojekt med syfte att snabbt ta fram SIS Workshop Agreement.
SS	Svensk standard. Fastställs av SIS, SEK eller ITS. SS ingår som första led i beteckningen för svensk standard fastställd efter 1 januari 1978.
SS/T1	Tillägg 1 till svensk standard.
SS-EN	Europastandard fastställd som svensk standard.
SS-EN/AC	Rättelse till Europastandard fastställd som svensk standard.
SS-EN/A1	Tillägg 1 till Europastandard fastställd som svensk standard.
SS-EN ISO	Internationell standard från ISO som blivit Europastandard och fastställd som svensk standard.
SS-EN ISO/AC	Rättelse till standard från ISO som blivit Europastandard och fastställd som svensk standard.
SS-EN ISO/A1	Tillägg 1 till standard från ISO som blivit Europastandard och fastställd som svensk standard.
SS-EN ISO/IEC	Internationell standard från ISO/IEC som blivit Europastandard och fastställd som svensk standard.
SS-IEC	IEC-standard fastställd som svensk standard.
SS-ISO	ISO-standard fastställd som svensk standard.
SS-ISO Amd 1	ISO-standard fastställd som svensk standard. Tillägg 1.
SS-ISO/Cor 1	ISO-standard fastställd som svensk standard. Rättelse 1.
WD	Working Draft. Förslag till internationell standard eller Europastandard utarbetade i WG.
WG	Working Group. Arbetsgrupp tillsatt av t. ex. en internationell kommitté.
WI	Work Item. Ärende, en avgränsad arbetsuppgift som avser att resultera i en standard.

SIS single user license: Syntilio bv, Ordered by: j.stelwagen@syntilio.com. Date: 2026-03-06

Glossary

Here are a number of the abbreviations/acronyms frequently used in standardisation contexts, with brief explanations. The abbreviations are in alphabetical order.

CEN	European Committee for Standardization (Comité Européen de Normalisation). Develops European standards for areas not covered by CENELEC.
CENELEC	European Committee for Electrotechnical Standardization (Comité Européen de Normalisation Electro-technique). Develops European standards in the electricity sector.
CWA	CEN/CENELEC Workshop Agreement. Technical document developed by CEN- and CENELEC-organised working group.
Consolidated	A consolidated standard incorporates its supplement and replaces previous editions.
EN	European standard from CEN/CENELEC.
ETSI	European Telecommunications Standards Institute. Develop European standards in the telecommunications field.
FDIS	Final Draft International Standard. Final proposal for global standard from IEC or ISO.
ICS	International Classification for Standards. An international classification system for standards.
IEC	International Electrotechnical Commission. Develops global standards in the electricity sector.
ISO	International Organization for Standardization. Develops global standards in all areas except telecommunications and electrical technology.
ITS	ITS Information Technology Standardisation. Develops and monitors standardisation in information technology. A Swedish member of the ETSI, European Telecommunications Standards Institute.
ITU	International Telecommunication Union. Develops global standards in radio and telecommunications.
IWA	ISO Workshop Agreement. Technical document developed by ISO-organised working group.
PAS	Publicly Available Specifications. Technical IEC and ISO documents.
prEN	Draft European standards from CEN, CENELEC or ETSI.
SEK	SEK Svensk Elstandard. Develops and monitors standardisation in the electrotechnical sector. Swedish member of the CENELEC and IEC.
SIS	SIS, Swedish Standards Institute. Swedish member of CEN and ISO.
SIS-TR	Technical Report. Technical report describing the results of investigations or other studies.
SIS-TS	Technical Specification. Technical specification describing what requirements a product, process or service must fulfil.
SIS-WA	SIS Workshop Agreement. An agreement setting out rules, guidelines or criteria for activities or their results.
SIS-WS	SIS Workshop. Standardisation project aimed at rapidly developing an SIS Workshop Agreement.
SS	Swedish standard. Established by SIS, SEK or ITS. SS is the first step in all standard classifications to emerge since 1 January 1978.
SS/T1	Supplement 1 to a Swedish standard.
SS-EN	European standard established as Swedish standard.
SS-EN/AC	Correction to the European standard established as Swedish standard.
SS-EN/A1	Supplement to the European standard established as Swedish standard.
SS-EN ISO	International and European standard established as Swedish standard.
SS-EN ISO/AC	Correction to the international and European standard established as Swedish standard.
SS-EN ISO/A1	Supplement to the international and European standard established as Swedish standard.
SS-EN ISO/IEC	International and European standard established as Swedish standard.
SS-IEC	IEC standard established as Swedish standard.
SS-ISO	ISO standard established as Swedish standard.
SS-ISO Amd 1	ISO standard established as Swedish standard, with Amendment 1.
SS-ISO/Cor 1	ISO standard established as Swedish standard, with Correction 1.
WD	Working Draft. Proposed international or European standard developed by the Working Group.
WG	Working Group. Appointed by an international committee or some other body.
WI	Work Item. A delimited task designed to result in a standard.

SIS single user license: Syntilio bv, Ordered by: j.stelwagen@syntilio.com. Date: 2026-03-06

Slutanvändarlicens

VIKTIGT – LÄS NOGGRANNT IGENOM DESSA VILLKOR INNAN ANVÄNDNING SKER AV DE PRODUKTER SOM TILLHANDAHÅLLS MED DENNA LICENS. GENOM ATT ANVÄNDA PRODUKTERNA GODKÄNNER NI OCH ACCEPTERAR VILLKOREN I DETTA LICENSAVTAL.

1. Parter
Detta licensavtal är ingått mellan SIS Förlag AB (”SIS Förlag”) och det företag/den person som licensierar de produkter som medföljer eller levereras under licensen (”Kunden”).

2. Upphovsrätt till Produkten
Den produkt som medföljer eller levereras under detta licensavtal (”Produkten”) är skyddad av svensk och internationell upphovsrättslagstiftning och tillhör den eller de upphovsrättsinnehavare som finns angivna på Produkten.

3. Upplåtelse av nyttjanderätt
SIS Förlag upplåter till Kunden en icke-exklusiv, icke-överlåtbar nyttjanderätt att använda Produkten enligt följande:
(a) Om Produkten levereras i pappersform har Kunden rätt att använda det exemplar av Produkten som levereras med detta licensavtal.
(b) Om Produkten levereras i elektronisk form har Kunden rätt att installera Produkten på en (1) dator, vilken ägs, hyrs eller kontrolleras av Kunden. Kunden har även rätt att flytta Produkten till en annan dator, under förutsättning att Produkten avinstalleras från den första datorn. Produkten får inte användas på två eller flera datorer samtidigt och inte heller i nätverk.

4. Begränsningar i nyttjanderätten
Kunden har inte rätt att kopiera, anpassa, förändra, översätta, hyra eller leasa ut, sälja, underlicensiera eller på annat sätt distribuera eller överlåta Produkten på annat sätt än som uttryckligen anges i detta licensavtal. Kunden får inte ta bort eller förändra någon upplysning om upphovsrätt och äganderätt som finns på Produkten och ansvarar vidare för att de upplysningar om upphovsrätt och äganderätt som finns på originalexemplaren av Produkten återges på samtliga kopior (om några) som Kunden har rätt att göra enligt detta licensavtal.

5. SIS Förlags ansvar samt ansvarsbegränsning
SIS Förlag ansvarar för att innehållet i den textmassa som Produkten omfattar levereras till Kunden i det skick som den kommit SIS Förlag tillhanda. I övrigt levereras Produkten i ”befintligt skick” och SIS Förlag ansvarar inte för att den information som Produkten förmedlar är korrekt eller fullständig, eller för resultatet av användningen av Produkten.
SIS Förlags ansvar omfattar endast direkta skador och ej indirekta skador såsom exempelvis förlorad handelsvinst och inte i något fall förlust av data. I inget fall ska SIS Förlags totala skadeständsansvar enligt detta licensavtal överstiga ett belopp motsvarande den avgift som Kunden betalat för nyttjanderätten enligt detta licensavtal.

6. Intrång i immaterialrätt
Om det, enligt SIS Förlag föreligger risk för att krav avseende intrång i tredje mans immateriella rättigheter kan komma att ställas på grund av användningen av Produkterna, har SIS Förlag rätt att på egen bekostnad (i) utverka rätt för Kunden att fortsätta med användning av Produkten, (ii) förändra eller ersätta Produkten eller del därav med andra produkter i syfte att undvika sådant krav, eller (iii) stoppa Kundens användning av Produkten och återbetala de avgifter som erlagts för den tid då utnyttjande av Produkten inte kunnat ske.
SIS Förlag ansvarar inte gentemot Kunden för krav som kunde ha undvikits om Kunden accepterat ersättningsprodukt eller om användningen av Produkten stoppats.

7. Export
Kunden äger inte rätt att exportera eller reexportera Produkten eller del därav, tillhörande information eller teknologi i strid med gällande svensk och annan tillämplig exportlagstiftning.

8. Avtalstid och uppsägning
Detta avtal gäller tills vidare. Kunden har rätt att säga upp licensavtalet när som helst. SIS Förlag kan säga upp Licensavtalet till omedelbart upphörande om Kunden bryter mot bestämmelse i licensavtalet. Då licensavtalet upphör ska Kunden omedelbart upphöra med användningen av Produkten och förstöra samtliga kopior av denna.

9. Tillämplig lag
Svensk lag, förutom dess bestämmelser om lagkonflikter, ska tillämpas på detta licensavtal, och tvister ska avgöras genom förfarande vid svensk domstol.

10. Övriga bestämmelser
Detta licensavtal utgör en fullständig reglering av vad som avtalats mellan parterna avseende användningen av Produkten och ersätter samtliga tidigare skriftliga eller muntliga avtal, utfästelser eller överenskommelser parterna emellan. Ändring i licens-avtalet kan endast ske genom skriftligen upprättad handling vilken undertecknats av SIS Förlag. Om en bestämmelse i licensavtalet skulle förklaras ogiltig av någon anledning, ska licensavtalet revideras endast i sådan omfattning som är nödvändigt för att göra licensavtalet giltigt, och sådan revidering ska (i) inte påverka giltigheten av den ogiltigförklarande delen under andra omständigheter, eller (ii) påverka övriga delar av licensavtalet.

SIS single user license: Syntilio bv, Ordered by: j.stelwagen@syntilio.com. Date: 2026-03-06

End user license

IMPORTANT – PLEASE READ THESE TERMS AND CONDITIONS BEFORE USING THE PRODUCTS DISTRIBUTED WITH THIS LICENSE. BY USING THE PRODUCTS YOU ARE ACCEPTING THE TERMS AND CONDITIONS OF THIS LICENSE AGREEMENT.

1. Parties
This License Agreement is by and between SIS Förlag AB (”SIS Förlag”) and the company/ individual licensing the products distributed and/or delivered with the License Agreement (“Customer”).

2. Rights to the Products
The Product distributed and/or delivered with the License Agreement (“Product”) is protected by Swedish and international copyright and other intellectual property laws and are the exclusive property of the proprietary owner/s stated on such Product.

3. Grant of Rights
SIS Förlag grants to Customer, a non-exclusive, non-assignable, limited right to use the Products as follows:
(a) If the Product is distributed in paper format you may use the copy of the Product distributed with this License Agreement.
(b) If the Product is distributed in electronic format you may install the Product on one (1) computer owned, leased or otherwise controlled by Customer. Customer may transfer the Product to another
computer, provided that the Product is removed from the computer from which it is transferred. Neither concurrent use on two or more computers nor use in a local area network or other network is permitted.

4. Restrictions in Use
Except as expressly permitted by this Agreement, Customer shall not copy, adapt, modify, translate, rent or lease, sell, sublicense or in any other manner distribute or transfer the Products. Customer shall not remove or change any copyright notices or proprietary legends on the Products, and is responsible for and shall ensure that each copy of the Products which Customer is allowed to make under this License Agreement (if any), are distributed with all copyright notices or proprietary legends contained on the original Products.

5. Limited Warranty, Limitation of Liability
SIS Förlag warrants that the content of the text encompassed by the Products is delivered to Customer in the same condition in which it was delivered to SIS Förlag. Except as provided for in this section 5 the Products are delivered “as is” and
SIS Förlag does not give any warranty of correctness or completeness as to the information conveyed by the Products or for the result of the use of the Products. SIS Förlag’s liability pursuant to this Agreement shall only be for direct damage and not for indirect damage, including but not limited to loss of profit. Under no circumstances shall SIS Förlag be liable for loss of data. SIS Förlag’s total liability pursuant to this Agreement shall never exceed the fees paid by Customer for the rights granted pursuant to this license agreement.

6. Intellectual Property Infringement
If, in the opinion of SIS Förlag, there is a risk of a claim is instituted against Customer, alleging that a Product distributed by SIS Förlag hereunder infringes any duly issued intellectual property right of a third party, SIS Förlag may, at its sole option and expense: (i) procure for Customer the right to use or sell such Product; (ii) substitute a functionally equivalent, non-infringing unit of the Product or modify such Product so that it no longer infringes but is substantially equivalent in functionality; or (iii) stop the Customer’s use of the Product and refund the License Agreement paid by Customer for such Product during the time hen such Product could not be used. SIS Förlag shall have no liability to Customer for claims that could have been avoided if the Customer would haveaccepted a replacement product or if the use of the Product would have been stopped.

7. Export
Customer shall not export or re-export, in whole or in part, the Products or any information regarding the Products, in contradiction to any stipulations contained on the Products or contrary to Swedish or any other applicable export legislation.

8. Term and Termination
This License Agreement will continue for an indefinite duration. Customer may terminate this License Agreement at any time. SIS Förlag may terminate this License Agreement immediately upon breach of any provision of this License Agreement. Upon any termination of this License Agreement, Customer shall immediately discontinue the use of the Product and destroy all copies of the Product.

9. Governing Law
This License Agreement shall be governed by the laws of Sweden without reference to its conflict of law provisions and any dispute shall be settled by Swedish courts.

10. Miscellaneous
This License Agreement constitutes the complete and exclusive agreement between SIS Förlag and you with respect to the subject matter hereof, and supercedes all prior oral or written understandings, communications or agreements not specifically incorporated herein. This License Agreement may not be modified except in writing duly signed by an authorized representative of SIS Förlag and you. If any provision of this License Agreement is held to be unenforceable for any reason, such provision shall be reformed only to the extent necessary to make it enforceable, and such decision shall not affect the enforceability (i) of such provision under other circumstances, or (ii) of the remaining provisions here of under all circumstances.

SIS single user license: Syntilio bv, Ordered by: j.stelwagen@syntilio.com. Date: 2026-03-06

SIS, Swedish Standards Institute och SEK Svensk Elstandard leder arbetet med standardisering i Sverige. Tillsammans med företag och organisationer jobbar vi med att förenkla, förbättra, kvalitetssäkra och skapa gemensamma standarder. SIS kunder har inflytande i internationell standardisering genom CEN i Europa och ISO globalt. SEK samordnar svensk medverkan i CENELEC i Europa och IEC globalt.

Du kan få dina standarder i olika format och media, detta är ett av dem. SIS Förlag AB är störst i Norden på att leverera standarder och allt som rör dess tillämpning. En tryckt standard från SIS Förlag AB är alltid tryckt på miljövänligt papper.

Vill du veta mer om vårt utbud och tjänster? Ring oss på 08-555 523 10
eller besök oss på www.sis.se

The Swedish Standards Institute (SIS) and SEK Svensk Elstandard share principal responsibility for standardisation in Sweden. Working with various agencies, enterprises and organisations, we seek to simplify, to introduce improvements, to secure quality and to establish common standards. SIS customers influence today's international standardisation work via CEN in Europe and ISO globally. SEK coordinates Swedish participation in CENELEC in Europe and in the IEC at the global level.

You can obtain your standards in different formats and in different media – this is just one of them. SIS Förlag AB is the leading supplier in the Nordic area of standards and all related applications. Printed standards from SIS Förlag AB are always printed on eco-friendly paper.

Would you like to know more about our range of products and services?
Phone us at +46 8 555 523 10 or visit us at www.sis.se

SIS Förlag AB SE-118 80 Stockholm, Sweden
Telephone +46 8 555 523 10. Fax +46 8 555 523 11
E-post sis.sales@sis.se **www.sis.se**

SWEDISH STANDARDS INSTITUTE