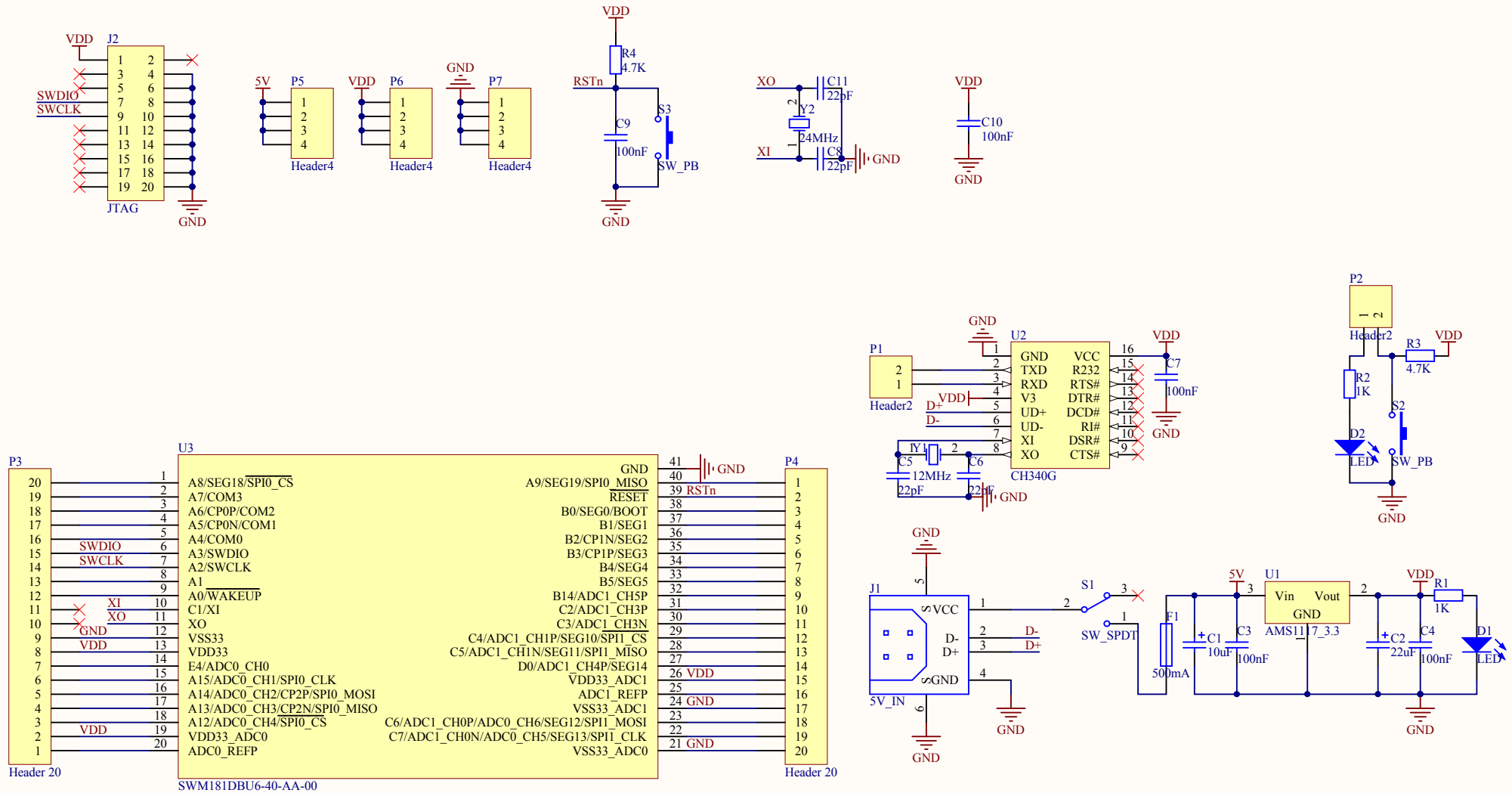

SWM181DBU6-40-AA-00_CoreBoard_V1.0