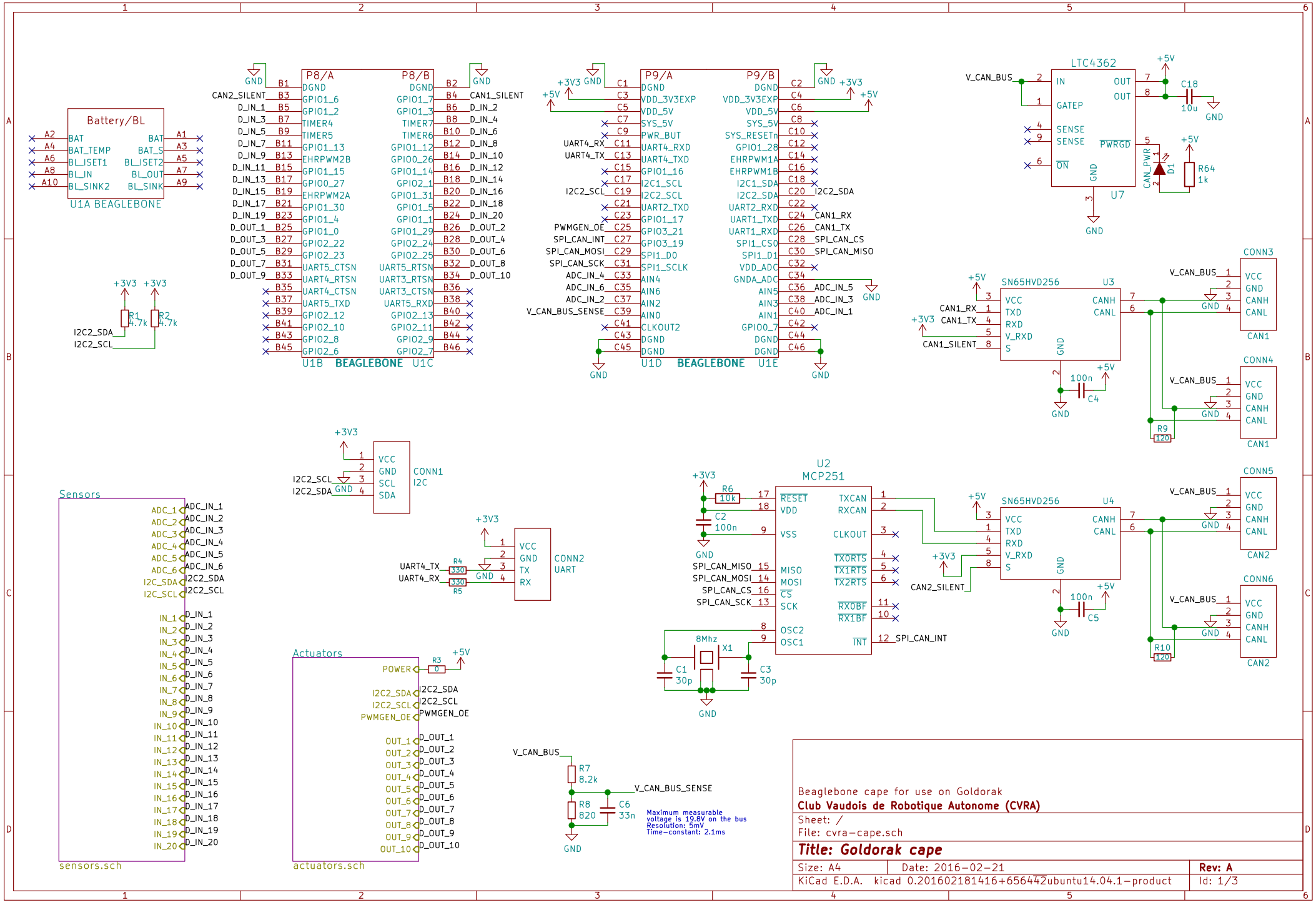
Battery/BL
U1A BEAGLEBONE
P8/A
P8/B
U1B BEAGLEBONE U1C
P9/A
P9/B
U1D BEAGLEBONE U1E
LTC4362
U7
SN65HVD256
U3
U4
CONN1 I2C
CONN2 UART
CONN3
CONN4
CONN5
CONN6
CAN1
CAN2
U2 MCP251
Sensors
sensors.sch
Actuators
actuators.sch
Maximum measurable voltage is 19.8V on the bus
Resolution: 5mV
Time-constant: 2.1ms
Beaglebone cape for use on Goldorak
Club Vaudois de Robotique Autonome (CVRA)
Sheet: /
File: cvra-cape.sch
Title: Goldorak cape
Size: A4
Date: 2016-02-21
Rev: A
KiCad E.D.A. kicad 0.201602181416+656442ubuntu14.04.1-product
Id: 1/3

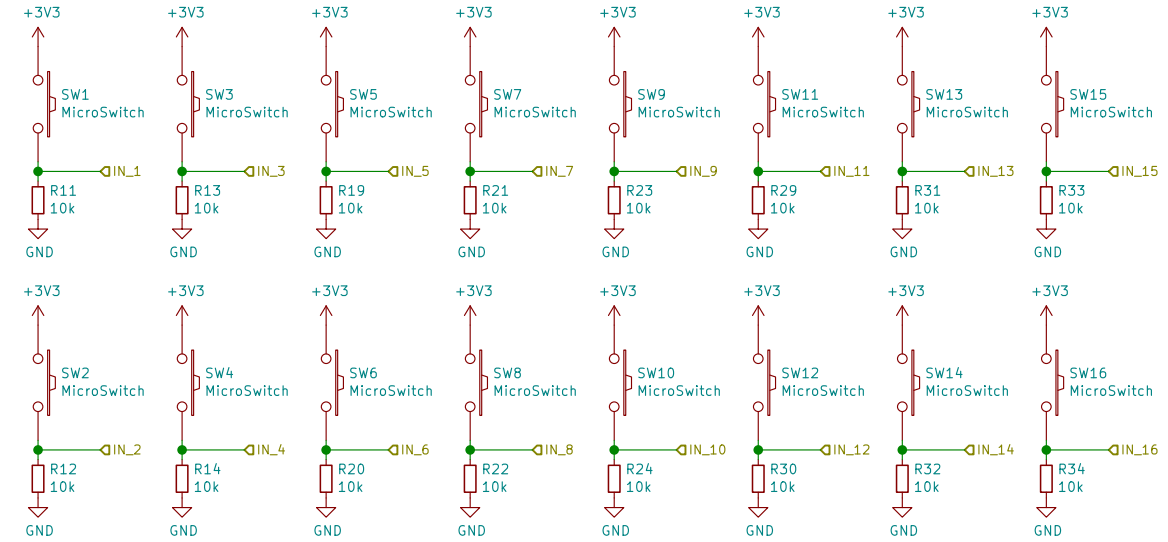

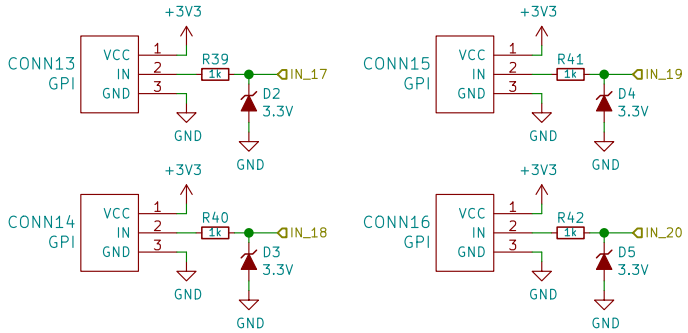

General purpose input connections
Level shifting from any to 3.3V using Zener
Current limiting to 3.3mA with 1k resistor

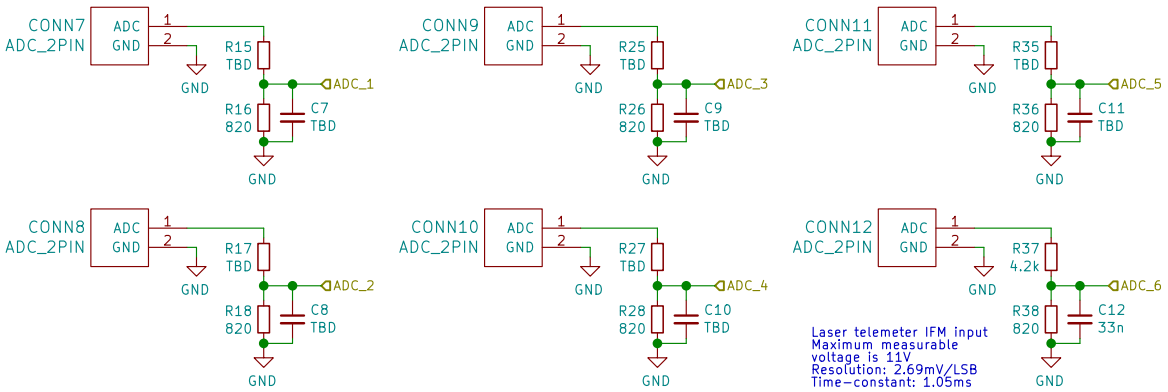

Laser telemeter IFM input
Maximum measurable
voltage is 11V
Resolution: 2.69mV/LSB
Time-constant: 1.05ms

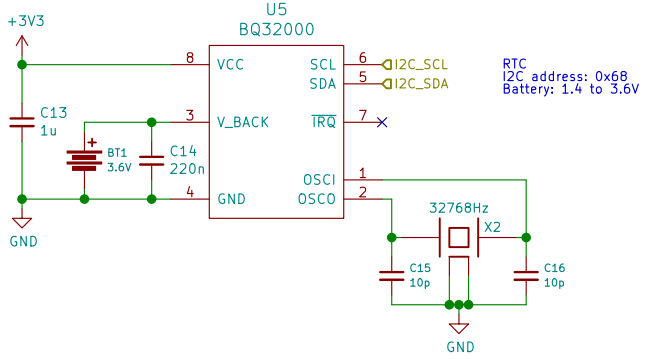

RTC
I2C address: 0x68
Battery: 1.4 to 3.6V

Beaglebone cape for use on Goldorak

Club Vaudois de Robotique Autonome (CVRA)

Sheet: /Sensors/
File: sensors.sch

Title: Goldorak cape

Size: A4	Date: 2016-02-21	Rev: A
KiCad E.D.A. kicad 0.201602181416+656442ubuntu14.04.1-product		Id: 2/3

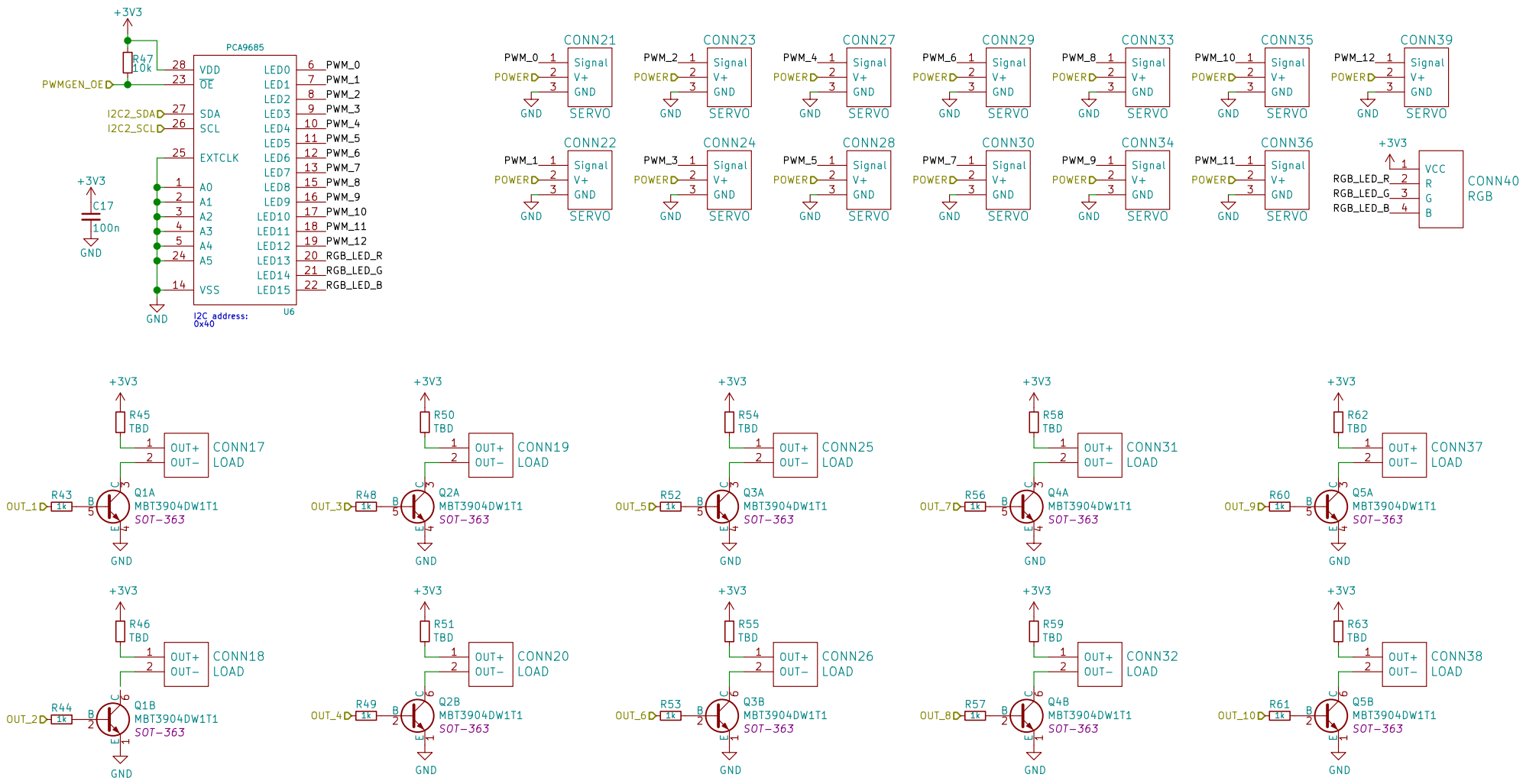

Beaglebone cape for use on Goldorak

Club Vaudois de Robotique Autonome (CVRA)

Sheet: /Actuators/

File: actuators.sch

Title: Goldorak cape

Size: A4	Date: 2016-02-21	**Rev: A**
KiCad E.D.A. kicad 0.201602181416+656442ubuntu14.04.1-product		Id: 3/3