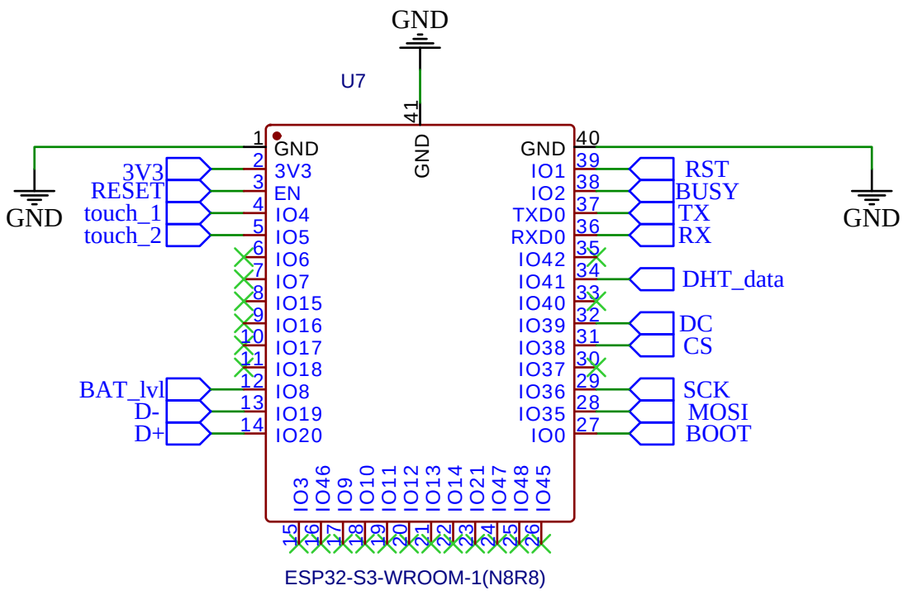

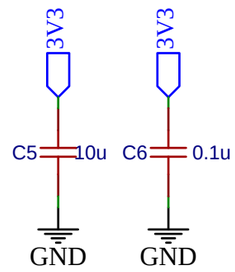

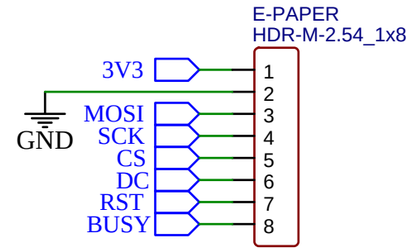

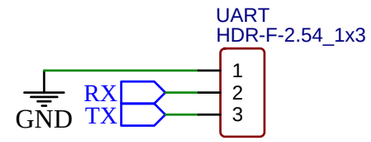

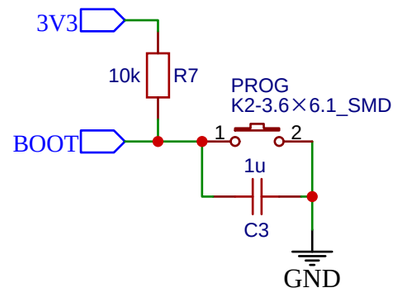

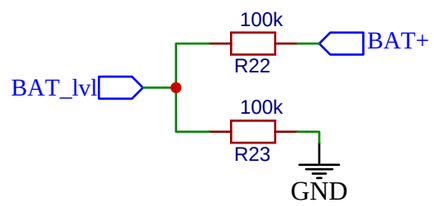

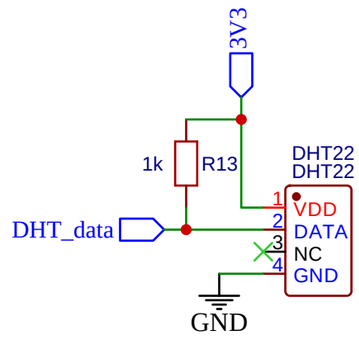

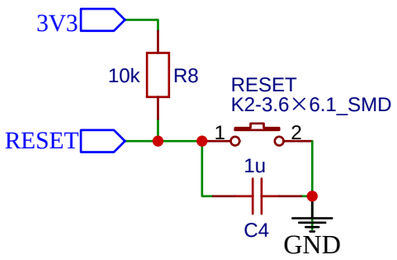

TITLE: ESP32 and peripherials	REV: 2.0
EasyEDA — Company: not yet	Sheet: 1/2
Date: 2022-09-29	Drawn By: Szymon Wącha ł a

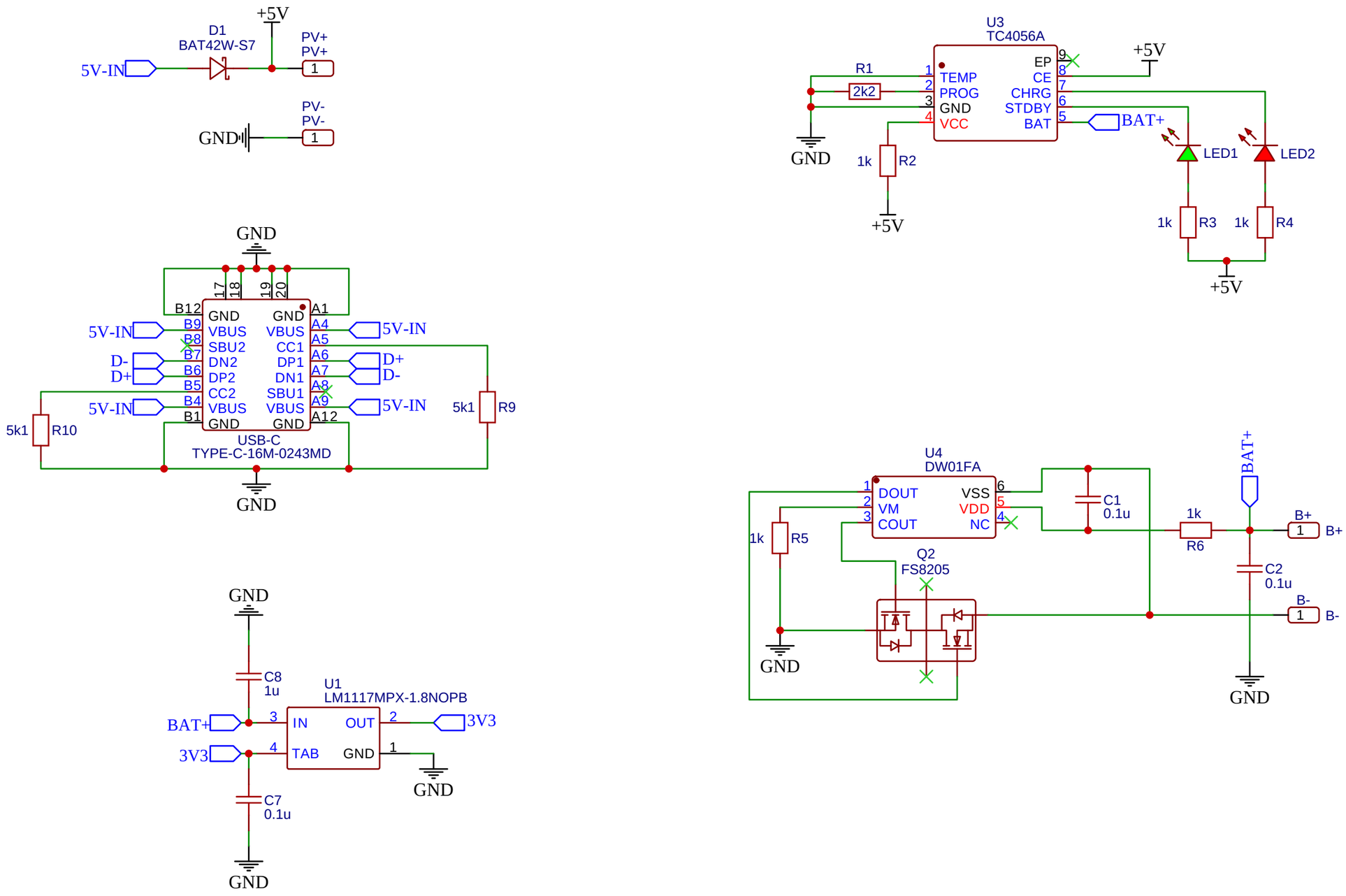

TITLE: Power section	REV: 2.1
Company: not yet	Sheet: 2/2
Date: 2022-09-30	Drawn By: Szymon Wącha ł a