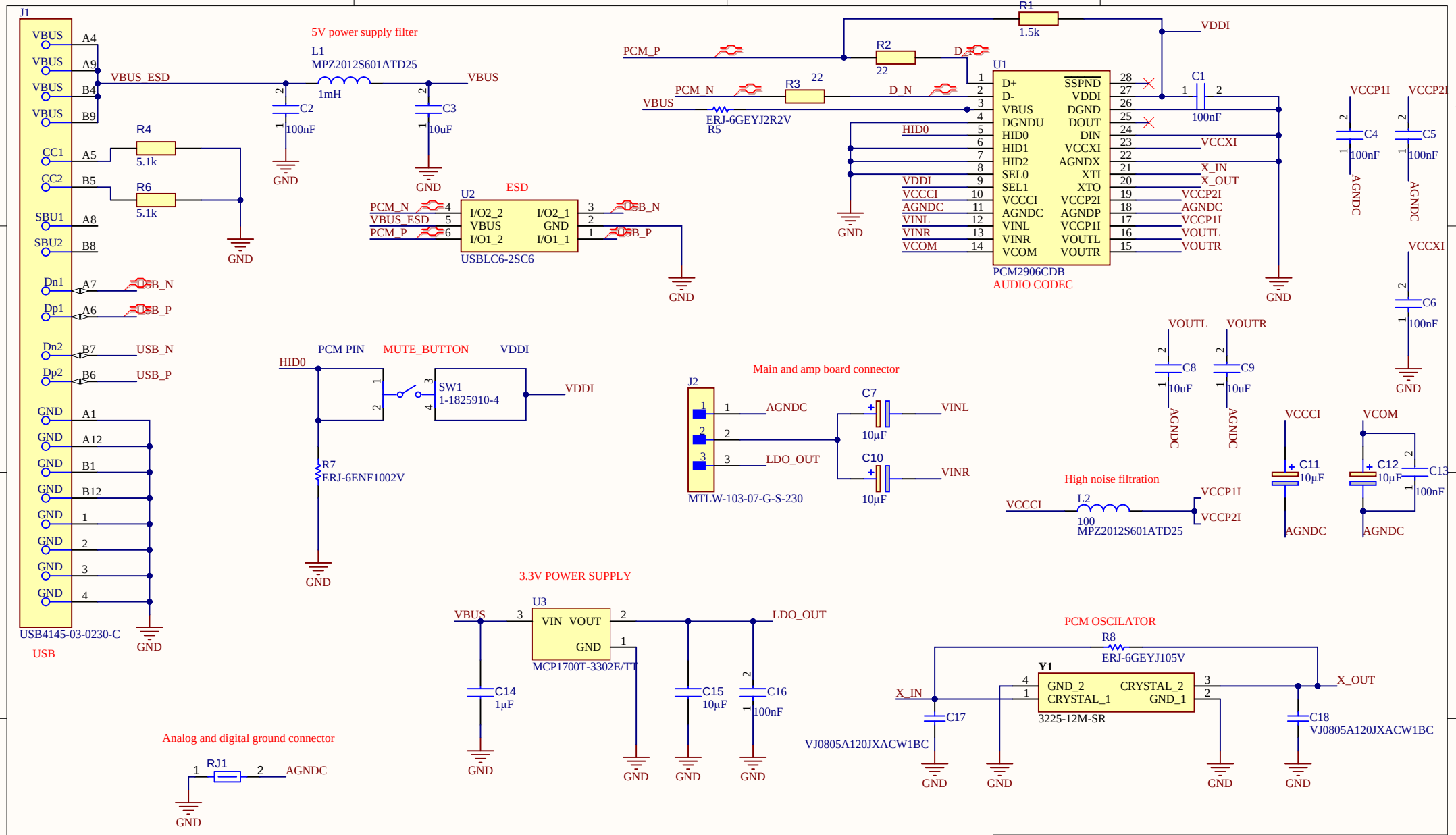

Title		
Size A4	Number	Revision
Date: 3.06.2026		Sheet of
File: D:\Github\..\microphone_DIY.SchDoc		Drawn By:

Line #	Name	Description	Designator	Revision ID	Revision State	Revision Status	Quantity	Manufacturer 1	Manufacturer Part Number 1	Manufacturer Lifecycle 1	Supplier 1	Supplier Part Number 1	Supplier Unit Price 1	Supplier Subtotal 1
	0805B104K500CT	CAP CER 0.1UF 50V X7R 0805	C1, C2, C3, C4, C5, C6, C8, C9, C13, C16		Unknown server		13	Walsin Technologies	0805B104K500CT	Volume Production	DigiKey	1292-1647-1-ND	0,02961	0,38496
	593D106X9016B2TE3	Cap Tant Solid 10uF 16V B CASE 10% (3.5 X 2.8 X 1.9mm) Inward L SMD 3528-21 0.8 Ohm 125C T/R	C1, C6, C7, C10, C11, C12		Unknown server		7	Vishay	593D106X9016B2TE3	Volume Production	TME	593D106X9016B2TE3	0,17492	1,22
	08055C105KAT2A	0805 Standard 1UF Ceramic Multilayer Capacitor, 50V, +125C, X7R Dielectric, +/-10%	C3, C14		Unknown server		2	KYOCERA AVX	08055C105KAT2A	Volume Production	TME	08055C105KAT2A	0,12338	0,24675
	293D105X9016A2TE3	Cap Tant Solid 1uF 16V A CASE 10% (3.2 X 1.6 X 1.6mm) SMD 3216-18 9.3 Ohm 125 C T/R	C5		Unknown server		1	Vishay	293D105X9016A2TE3	Volume Production	TME	293D105X9016A2TE3	0,33818	0,33818
	0805B106K100CT	10V 10uF X7R ±10% 0805 Multilayer Ceramic Capacitors MLCC - SMD/SMT ROHS	C15		Unknown server		1	Walsin Technologies	0805B106K100CT	Volume Production	DigiKey	1292-0805B106K100CT-ND	0,12828	0,12828
	VJ0805A120JXACW1BC		C17, C18		Unknown server		2	Vishay	VJ0805A120JXACW1BC	Volume Production	DigiKey	720-1626-1-ND	0,11845	0,2369
	USB4145-03-0230-C	USB4145-03-0230-C USB Connectors USB-C Rec 3u Vert 16P SMT 2.3mm TH stakes H7.46mm T+R+Cap	J1		Unknown server		1	Global Connector Technology	USB4145-03-0230-C	Volume Production	Mouser	640-USB4145-3-0230-C	0,95746	0,95746
	MTLW-103-07-G-S-230	CONN HEADER VERT 3POS 2.54MM	J1, J2		Unknown server		2	Samtec	MTLW-103-07-G-S-230	Volume Production	DigiKey	SAM11546-ND	0,76992	1,54
	TSW-102-14-G-S	CONN HEADER VERT 2POS 2.54MM	J2		Unknown server		1	Samtec	TSW-102-14-G-S	Volume Production	Mouser	200-TSW10214GS	0,22703	0,22703
	MPZ2012S601ATD25	Ferrite Beads Multi-Layer Power 600Ohm 25% 100MHz 2A 0.1Ohm DCR 0805 Automotive T/R	L1, L2		Unknown server		2	TDK	MPZ2012S601ATD25	Volume Production	TME	MPZ2012S601ATD25	0,11078	0,22157
	AR05BTCW1501	125mW Thin Film Resistor 100V ±25ppm/°C ±0.1% 1.5kΩ 0805 Chip Resistor - Surface Mount ROHS	R1, R4, R5, R7		Unknown server		5	Viking Tech	AR05BTCW1501	Volume Production				
	ERA6AEB222V		R2		Unknown server		1	Panasonic	ERA6AEB222V	Volume Production	DigiKey	P2.2KDACT-ND	0,09871	0,09871
	CPF0805B22RE1	Res Thin Film 0805 22 Ohm 0.1% 0.1W(1/10W) ±25ppm/°C Pad SMD T/R Medical	R2, R3		Unknown server		2	TE Connectivity	2-1614884-5	Volume Production	TME	CPF0805B22RE1	0,21923	0,43847
	ERJ-6ENF1002V		R3, R6, R7		Unknown server		3	Panasonic	ERJ-6ENF1002V	Volume Production	Mouser	667-ERJ-6ENF1002V	0,10858	0,32574
	ERJP06F5101V	Res Thick Film 0805 5.1K Ohm 1% 0.25W ±100ppm/°C Molded SMD Punched Carrier T/R	R4, R6		Unknown server		2	Panasonic	ERJP06F5101V	Volume Production	DigiKey	10-ERJ-P06F5101VCT-ND	0,16326	0,32652
	ERJ-6GEYJ2R2V		R5		Unknown server		1	Panasonic	ERJ-6GEYJ2R2V	Volume Production	DigiKey	P2.2ACT-ND	0,09871	0,09871
	ERJ6ENF4702V		R8		Unknown server		1	Panasonic	ERJ-6ENF4702V	Volume Production	DigiKey	P47.0KCCT-ND	0,10858	0,10858
	ERJ-6GEYJ105V		R8		Unknown server		1	Panasonic	ERJ-6GEYJ105V	Volume Production	Mouser	667-ERJ-6GEYJ105V	0,09871	0,09871
	1-1825910-4	SWITCH TACTILE SPST-NO 0.05A 24V	SW1		Unknown server		1	TE Connectivity	1-1825910-4	Volume Production	Mouser	506-1-1825910-4	0,13819	0,13819
	OPA1688IDR	IC OPAMP GP 2 CIRCUIT 8SOIC	U1		Unknown server		1	Texas Instruments	OPA1688IDR	Volume Production	DigiKey	296-47272-1-ND	1,53	1,53
	PCM2906CDB	Stereo USB CODEC with line out and S/PDIF, Bus-powered 28-SSOP -25 to 85	U1		Unknown server		1	Texas Instruments	PCM2906CDB	Volume Production	Texas Instruments	PCM2906CDB	12,32	12,32
	USBLC6-2SC6	5A 17V 6V Unidirectional 5.25V SOT-23-6 ESD and Surge Protection (TVS/ESD) ROHS	U2		Unknown server		1	STMicroelectronics	USBLC6-2SC6	Volume Production	TME	USBLC6-2SC6	0,27054	0,27054
	MCP1700T-3302E/TT	Low Quiescent Current LDO, 3-Pin SOT-23, Extended Temperature, Tape and Reel	U3		Unknown server		1	Texas Instruments	TPS7A0533PDBZR	Volume Production	Texas Instruments	TPS7A0533PDBZR	0,24677	0,24677
	3225-12M-SR	SMD crystal oscilator 12 MHz	Y1		Unknown server		1	SR Passives	3225-12M-SR		TME	3225-12M-SR	0,40815	0,8163